Innovation, Sciences et
Développement économique Canada
Office de la Propriété Intellectuelle du Canada

Innovation, Science and
Economic Development Canada
Canadian Intellectual Property Office

CA 3013470 C 2021/04/13

(11)(21) **3 013 470**

(12) BREVET CANADIEN
CANADIAN PATENT

(13) **C**

(22) **Date de dépôt/Filing Date:** 2011/06/23

(41) **Mise à la disp. pub./Open to Public Insp.:** 2011/12/29

(45) **Date de délivrance/Issue Date:** 2021/04/13

(62) **Demande originale/Original Application:** 2 803 168

(30) **Priorités/Priorities:** 2010/06/23 (US61/357,851);
2010/11/16 (US61/414,279); 2011/03/02 (US61/448,631);
2011/05/03 (US61/482,070)

(51) **Cl.Int./Int.Cl.** *H05K 7/20* (2006.01),
F25B 7/00 (2006.01), *F25D 16/00* (2006.01)

(72) **Inventeurs/Inventors:**
COSTAKIS, JOHN, US;
KEISLING, EARL, US;
MCDONNELL, GERALD, US

(73) **Propriétaire/Owner:**
INERTECH IP LLC, US

(74) **Agent:** MOFFAT & CO.

(54) **Titre :** CENTRE DE DONNEES MODULAIRE A HAUTE DENSITE ET A ECONOMIE D'ESPACE ET SYSTEME DE REFROIDISSEMENT EFFICACE EN ENERGIE

(54) **Title:** SPACE-SAVING HIGH-DENSITY MODULAR DATA CENTER AND AN ENERGY-EFFICIENT COOLING SYSTEM

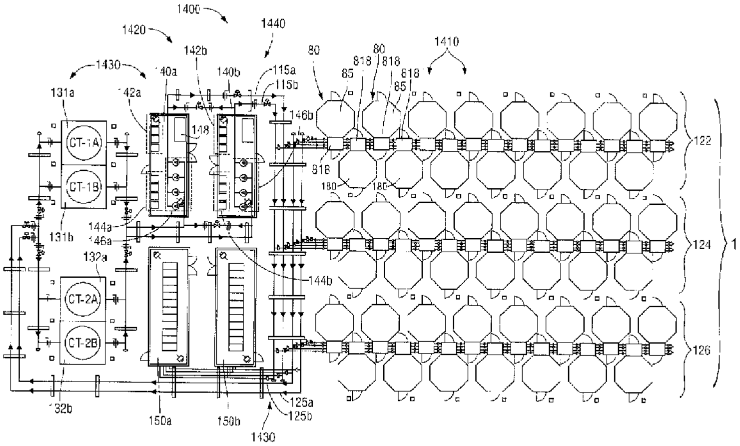

(57) **Abrégé/Abstract:**

A space-saving, high-density modular data pod system and an energy-efficient cooling system are disclosed. The modular data pod system includes a central free- cooling system and a plurality of modular data pods, each of which includes a heat exchange assembly coupled to the central free-cooling system, and a distributed mechanical cooling system coupled to the heat exchange assembly. The modular data pods include a data enclosure having at least five walls arranged in the shape of a polygon, a plurality of computer racks arranged in a circular or U-shaped pattern, and a cover to create hot and cold aisles, and an air circulator configured to continuously circulate air between the hot and cold aisles. Each modular data pod also includes an auxiliary enclosure containing a shared fluid and electrical circuit section that is configured to connect to adjacent shared fluid and electrical circuit sections to form a shared fluid and electrical circuit that connects to the central free-cooling system. The auxiliary enclosure contains at least a portion of the distributed mechanical cooling system, which is configured to trim the cooling performed by the central free-cooling system.

ABSTRACT

A space-saving, high-density modular data pod system and an energy-efficient cooling system are disclosed. The modular data pod system includes a central free-cooling system and a plurality of modular data pods, each of which includes a heat exchange assembly coupled to the central free-cooling system, and a distributed mechanical cooling system coupled to the heat exchange assembly. The modular data pods include a data enclosure having at least five walls arranged in the shape of a polygon, a plurality of computer racks arranged in a circular or U-shaped pattern, and a cover to create hot and cold aisles, and an air circulator configured to continuously circulate air between the hot and cold aisles. Each modular data pod also includes an auxiliary enclosure containing a shared fluid and electrical circuit section that is configured to connect to adjacent shared fluid and electrical circuit sections to form a shared fluid and electrical circuit that connects to the central free-cooling system. The auxiliary enclosure contains at least a portion of the distributed mechanical cooling system, which is configured to trim the cooling performed by the central free-cooling system.

SPACE-SAVING HIGH-DENSITY MODULAR DATA CENTER AND AN ENERGY-EFFICIENT COOLING SYSTEM

CROSS-REFERENCE TO RELATED APPLICATIONS

[0001] This application claims the benefit of and priority to U.S. Provisional Application Ser. No. 61/357,851, filed on June 23, 2011, entitled "SPACE-SAVING HIGH DENSITY MODULAR DATA PODS AND ENERGY-EFFICIENT COOLING SYSTEM"; U.S. Provisional Application Ser. No. 61/414,279, filed on November 16, 2010, entitled "CLOSE-COUPLED COOLING SYSTEMS AND METHODS FOR CHILLERLESS OPERATION IN HIGH WET BULB TEMPERATURE APPLICATIONS"; U.S. Provisional Application Ser. No. 61/448,631, filed on March 2, 2011, entitled "MODULAR IT RACK COOLING ASSEMBLIES AND METHODS FOR ASSEMBLING SAME"; and U.S. Provisional Application Ser. No. 61/482,070, filed on May 3, 2011, entitled "SYSTEMS AND METHODS FOR CLOSE-COUPLED COOLING OF IT EQUIPMENT.

BACKGROUND

1. Technical Field

[0002] The present disclosure generally relates to computing data centers. More particularly, the present disclosure relates to space-saving high-density modular data pod systems and energy-efficient cooling systems for modular data pod systems.

2. Background of Related Art

[0003] Traditionally, large data centers rely on large, oversized cooling electrical infrastructures, including chilled water systems, chiller plants, and direct expansion cooling systems, to maintain their operating temperatures. There are many problems associated with the large, oversized cooling electrical infrastructures, including high initial capital, operation and maintenance costs. For instance, a traditional chiller plant may require approximately 280 tons of chiller capacity to support a large data center having a power consumption capacity of 1 MW. Further, the traditional chiller plant is typically designed to cool the entire data center, as opposed to a few selected areas within the data center. As a result, the traditional chiller plant spends a considerable amount of energy on areas that do not need to be cooled. Further, one of the design constraints used to implement the traditional chiller plant is the power consumption capacity of the entire data center. For that reason, if the data center does not run at its power consumption capacity due to load fluctuation, the efficiency of the traditionally chiller plant drops significantly.

[0004] Currently, several cooling systems exist in the market having a more modular design approach compared to the traditional, large, oversized cooling electrical infrastructures that allow them to treat selected areas of a large data center at a reduced cost. For instance, an air-cooled "free cooling" system (also referred to as a straight air-cooled system) uses ambient air as a medium to cool server racks or containers of server racks in a large data center. However, one of the drawbacks of the air-cooled "free cooling" system is that it operates only in a cool, dry-climate environment thereby restricting its use to limited geographical areas in the world.

[0005] An adiabatic-assisted system is another cooling system that rivals the traditional, large, oversized cooling electrical infrastructures. The adiabatic-assisted system is a cooling system assisted by adiabatic water, having a more expanded geographical reach than the air-cooled "free cooling" system. However, the adiabatic-assisted system has certain cooling tolerance limitations and is incapable of providing sufficient cooling to high density data centers, e.g., data centers having IT rack loads of 40 kW per IT rack.

SUMMARY

[0006] The embodiments of the modular data pod systems and the associated cooling systems of the present disclosure provide significant improvements over traditional data centers and their cooling systems including, for example, (1) a lower cost per kilowatt (kW) to build, deploy, and operate a data center, (2) faster deployment than stick-built construction, (3) more easily restacked and redeployed to allow the data center to keep up with new technological advances in server technology, (4) expandability, (5) compatibility with very high efficiency systems to gain the highest power use efficiency (PUE) factor, (6) space saving and efficient in its space requirements allowing higher density capabilities (i.e., more kilowatts per square foot), (7) scalability, (8) efficiency in mechanical cooling, (9) multi-use characteristics for single deployment, large indoor warehousing, or large outdoor applications, such as data center farms, (10) energy-efficiency in the containment of hot and cold aisles, (11) flexibility in its use of different types of cooling systems, and (12) capability of being modified to meet data center tier requirements for redundancy.

[0007] In one aspect, the present disclosure features a modular data center. In one embodiment, the modular data center includes a first cooling circuit that has a primary cooling device and a plurality of modular data pods. Each modular data pod includes a plurality of servers, a heat exchange member coupled to the first cooling circuit, and a second cooling circuit coupled to the heat exchange member. The second cooling circuit is configured to cool the plurality of servers. The second cooling circuit includes a secondary cooling device configured to cool fluid flowing through the second cooling circuit.

[0008] In another aspect, the present disclosure features a modular data pod. The modular data pod includes a plurality of servers, at least one heat exchange member and a second cooling circuit. The at least one heat exchange member is configured to couple to a first cooling circuit which includes a free-cooling device. The second cooling circuit is coupled to the heat exchange member. Further, the second cooling circuit is in thermal communication with the plurality of servers. The second cooling circuit includes a mechanical cooling device.

[0009] In another embodiment, the modular data center includes a central cooling system and a plurality of modular data pods. Each modular data pod includes a plurality of servers, a heat exchange assembly coupled to the central cooling system, and a distributed cooling system coupled to the heat exchange assembly. The heat exchange assembly is configured to cool the plurality of servers.

[0010] In another embodiment, the modular data pod includes an enclosure, a plurality of computer racks arranged within the enclosure. The enclosure includes wall members contiguously joined to one another along at least one edge of each wall member. The wall members are formed in the shape of a polygon. The enclosure also includes a data pod covering member. The plurality of computer racks forms a first volume formed between the inner surface of the wall members and first sides of the computer racks. The plurality of racks also forms a second volume formed between the inner surface of the wall members and second sides of the computer racks. The modular data pod further includes a computer rack covering member which is configured to enclose the second volume. The computer rack covering member and the data pod covering member form a third volume. The third volume couples the first volume to the second volume. The modular data pod may also include an air circulator which is configured to continuously circulate air through the first, second, and third volumes.

[0011] In another embodiment, the modular data center includes a central fluid and electrical circuit, a chain of modular data pods and a central cooling device. Each modular data pod in the chain of modular data pods includes a shared cooling fluid circuit section and an unshared cooling fluid circuit. The unshared cooling fluid circuit is coupled to the shared fluid and electrical circuit section. The shared fluid and electrical circuit section form a part of a shared fluid and electrical circuit. The shared fluid and electrical circuit are coupled at one end to the central fluid and electrical circuit. The central cooling device is coupled to the central cooling fluid circuit. The central cooling device is configured to support at least a portion of the cooling requirements of the first chain of modular data pods.

[0012] In yet another aspect, the present disclosure features a cooling system for a modular data center. The cooling system includes a first cooling circuit which includes a primary cooling device. The cooling system also includes a plurality of modular data pods. Each modular data pod includes an enclosure that includes a plurality of server racks, a heat exchange member coupled to the first cooling circuit, and a second cooling circuit coupled to the heat exchange member. The second cooling circuit is configured to cool the enclosure. The second cooling circuit includes a secondary cooling device configured to cool fluid flowing through the second cooling circuit.

[0013] In yet another aspect, the present disclosure features a system for cooling electronic equipment. The system includes a free-cooling system and a mechanical sub-cooling system. The free-cooling system is configured to cool a first fluid in thermal communication with electronic equipment using atmospheric air. The mechanical sub-cooling system is coupled to the free-cooling system. The mechanical system is configured to cool a second fluid flowing in the free-cooling system as a function of an amount by which the free-cooling system has exceeded its maximum cooling capacity.

[0014] In yet another embodiment, the present disclosure features a cooling system for cooling electronic equipment. The cooling system includes a first fluid circuit, a second fluid circuit and a third fluid circuit. The first fluid circuit is configured to cool electronic equipment using a first fluid flowing through the first fluid circuit. The second fluid circuit is configured to free cool a second fluid flowing through the second fluid circuit. Further, the second fluid circuit is configured to cool the first fluid using the free-cooled second fluid. The third fluid circuit is configured to mechanically cool the second fluid as a function of the difference between the wet bulb temperature of atmospheric air and a first predetermined wet bulb temperature when the wet bulb temperature exceeds the first predetermined wet bulb temperature.

BRIEF DESCRIPTION OF THE DRAWINGS

[0015] Various embodiments of the present disclosure are described with reference to the accompanying drawings wherein:

[0016] FIG. 1 is a schematic diagram of a modular data center according to embodiments of the present disclosure;

[0017] FIG. 2A is an illustration of a modular data pod having a pentagonal wall configuration according to one embodiment of the present disclosure;

[0018] FIG. 2B is an illustration of a modular data pod having a hexagonal wall configuration according to another embodiment of the present disclosure;

[0019] FIG. 2C is an illustration of a modular data pod having a heptagonal wall configuration according to yet another embodiment of the present disclosure;

[0020] FIG. 2D is an illustration of a modular data pod having an octagonal wall configuration according to one embodiment of the present disclosure;

[0021] FIG. 2E is an illustration of a modular data pod having a nonagonal wall configuration according to one embodiment of the present disclosure;

[0022] FIG. 2F is an illustration of a modular data pod having a decagonal wall configuration according to yet another embodiment of the present disclosure;

[0023] FIG. 2G is an illustration of the octagonal-shaped modular data pod of FIG. 2D having two elongated walls forming a modular data pod according to another embodiment of the present disclosure;

[0024] FIG. 3 is an elevation view (i.e., sectional side view) of a generic modular data pod including a hot aisle and a cold aisle according to embodiments of the present disclosure;

[0025] FIG. 4 is a plan view (i.e., sectional top view) of a modular data pod showing an upper coil deck according to embodiments of the present disclosure;

[0026] FIG. 5 is a plan view (i.e., sectional top view) of a modular data pod showing a ceiling fan assembly according to embodiments of the present disclosure;

[0027] FIG. 6 is an exemplary embodiment of a flow diagram for a close-coupled cooling system for chillerless operation in high wet bulb temperature applications according to the present disclosure;

[0028] FIG. 7 is a schematic diagram of a refrigerant-cooled cooling system that includes the close-coupled cooling system of FIG. 6 for modular data pods according to embodiments of the present disclosure;

[0029] FIG. 8 is a schematic diagram of a water-cooled air-conditioning system that includes an external chiller according to embodiments of the present disclosure;

[0030] FIG. 9 illustrates a modular data pod that includes a separate cooling circuit that forms an "A-Frame" heat exchanger assembly according to one embodiment of the present disclosure;

[0031] FIG. 10 is an upper plan view of the modular data pod of FIG. 9 that inlcudes the separate cooling circuit that forms an "A-Frame" heat exchanger assembly according to one embodiment of the present disclosure;

[0032] FIG. 11 is a lower plan view of the modular data center pod assembly of FIG. 10 illustrating forced-flow cooling devices that force air vertically through a sump below the central aisle of the modular data center pod assembly;

[0033] FIG. 12 is a schematic flow diagram of a cooling system for a data center assembly including a close-coupled cooling system according to embodiments of the present disclosure;

[0034] FIG. 13 is a schematic flow diagram of a close-coupled cooling system that can include the cooling system of FIG. 12 according to embodiments of the present disclosure;

[0035] FIG. 14 is a schematic diagram of a water-cooled cooling system showing water flow according to embodiments of the present disclosure;

[0036] FIG. 15 is a schematic diagram of a cooling system for low wet bulb environments where high wet bulb conditions may occasionally occur. that includes a modular chiller according to embodiments of the present disclosure;

[0037] FIG. 16 is a schematic diagram of a portion of a water-cooled cooling system that includes an existing water cooling system showing water flow according to embodiments of the present disclosure;

[0038] FIG. 17 is a schematic diagram of a modular data pod farm illustrating staged expansion of the data pod farm according to embodiments of the present disclosure;

[0039] FIG. 18 is a schematic diagram of a modular data pod farm illustrating a transport system for modular data pods according to embodiments of the present disclosure.

[0040] FIG. 19 is a schematic diagram of a modular data pod farm illustrating the removal of data pods according to embodiments of the present disclosure;

[0041] FIG. 20 is a schematic diagram of a modular data pod farm according to embodiments of the present disclosure;

[0042] FIGS. 21A-21C are flow diagrams of a method of cooling electronic equipment according to embodiments of the present disclosure; and

[0043] FIGS. 22A-22B are flow diagrams of a method of deploying modular data pods of a modular data center according to embodiments of the present disclosure.

DETAILED DESCRIPTION

[0044] Embodiments of the presently disclosed close-coupled cooling systems and methods will now be described in detail with reference to the drawings, in which like reference numerals designate identical or corresponding elements in each of the several views.

[0045] The present disclosure relates to modular data pods and related support systems for providing energy-efficient, space-saving, and high-density server rack configurations. This modular approach allows for highly efficient use of geometric shapes such as octagonal, hexagonal, and pentagonal shapes for creating a hot aisle and a cold aisle through which air circulates for cooling the server racks. These polygonal shapes allow for maximum energy-efficiency and space-savings using the benefits of both the interior and the exterior angles and sides. The interior pod shape provides a natural circular configuration for positioning server racks. As compared to the prior art, this configuration provides a more efficient way to create and contain a hot aisle and a cold aisle.

[0046] The cooling air, which is used to efficiently cool computer systems, such as data servers, follows a natural path which allows for natural convection. The natural convection is assisted by mechanical cooling systems and components, e.g., fans, which are deployed in an efficient manner. The exterior shape of the modular data pods allows for the most efficient use of the space-saving characteristics of the multi-sided and angular geometric shapes of the modular data pods. The modular data pods can be deployed in tight groups similar to the patterns seen in bee hives. Bee hives are considered to be the most efficient use of space known to man. The space-saving, efficient design of the modular data pods accommodates the tremendous growth of the IT data storage industry. The completely modularized data pods also feature energy-efficient cooling systems and electrical, controls and IT systems for "just in time" deployment.

[0047] The close-coupled cooling systems and methods according to the present disclosure are "chiller-less" and require significantly less mechanical refrigeration capacity than cooling systems using chillers to handle the cooling of fluctuating IT loads. In some embodiments, the system uses approximately 39-40 tons of sub cooling to accomplish the cooling of 1 megawatt of IT loading. This is based on providing cooling in areas of relatively high wet bulb conditions such as the north east or southern hemispheres where wet bulb conditions can be extreme (e.g., wet bulb temperatures of 78° F and above). The system can be deployed in relatively high wet bulb environmental areas where chillers or direct expansion (DX) systems would have been normally been mandatory.

[0048] An individual sub cooling system can operate with close-coupled cooling at the individual point of loading to enable sufficient cooling to support IT rack inlet cooling temperatures (at the cold aisle) that would have normally required either DX or chiller assistance. The system according to some embodiments of the present disclosure is used in close-coupled applications such as modular data center applications. In other embodiments, the cooling system can be used as a packaged system to support modular cooling within a typical data center white space. The system can significantly reduce the up front as well as the operational costs (e.g., energy costs) of data centers.

[0049] In some embodiments, the system can cool IT server racks using 72° F refrigerant or higher as dictated by a particular project. This provides cold aisle air temperatures or rack inlet temperatures of 75° F or higher as dictated by a particular project.

[0050] FIG. 1 is a schematic diagram of a modular data center or data pod hive 1. The term "hive" refers to a plurality of modular data pods coupled together and the associated cooling infrastructure. The data pod hive 1 includes a plurality of modular data pods 80 arranged in data pod chains 122, 124, 126. The modular data pods 80 include a data enclosure 85, which contains server racks, and an auxiliary enclosure 818, which contains cooling, power, and control circuitry.

[0051] The data pods 80 are coupled to central cooling, power, and control systems. The central cooling system includes a central cooling fluid circuit. The central cooling fluid circuit includes a first pair of cooling towers 131a, 131b, a second pair of cooling towers 132a, 132b, two banks of fluid pumps 146a, 146b, a pair of supply lines 115a, 115b, and a pair of return lines 125a, 125b. The central cooling system also includes two banks of variable frequency drives 144a, 144b, which drive respective banks of fluid pumps 146a, 146b. The central cooling system also includes two banks of variable frequency drives 142a, 142b, which drive fans and/or fluid pumps within the two pairs of cooling towers 131a, 131b, 132a, 132b. The data pod hive 1 also includes a pair of central battery backup units 150a, 150b that provide battery backup power to the modular data pods 80.

[0052] The modular data pod hive 1 of FIG. 1 may be designed and deployed to support a large amount of server rack capacity (e.g., approximately 12-15 MW of server rack capacity). FIG. 1 shows the space-saving attributes of the modular data pods' geometric shape. A typical data center, which is non-modular, requires three to four times as much space to handle this level of server rack capacity and density.

[0053] FIG. 1 shows the placement of the system infrastructure at one end of the modular data pod hive 1. Initially, a sufficient number of data pods can be installed for early deployment. The number of cooling towers, pumps, and electrical switch equipment can be deployed as needed on a just-in-time basis. Additional modular data pods, including their auxiliary enclosures 818 housing associated pipe and electrical chases, can be added to the data pod hive 1 over time. FIG. 1 depicts an example of a full-hive deployment.

[0054] FIGS. 2A-2G depict modular data pods having different polygonal shapes according to embodiments of the present disclosure. The polygonal shapes of the modular data pods offer several benefits. The exterior of the polygonal shapes is conducive to space-efficient packing or grouping. And the interior of the polygonal shapes allows for tight arrangement of square or rectangular server racks corner to corner in a circular pattern within the polygonal shape of the modular data pod.

[0055] This arrangement defines an efficient partition between the hot and cold aisles. For example, in those embodiments where the computer racks are arranged so that they radiate or blow heat towards the walls of the data pod, the hot aisle is defined by the air space between the walls of the modular data pod and the computer racks and the hot aisle is defined by the air space created by the sides of the computer racks that face towards the center of the modular data pod. In other embodiments, the computer racks may be arranged so that the cold aisle is defined by the air space between the walls of the modular data pod and the computer racks and the cold aisle is defined by the air space created in the middle of the modular data pod by the sides of the computer racks that face towards the center of the modular data pod.

[0056] The tight grouping of the computer racks also allows for efficient use of the close distance between related equipment that is mounted in the computer racks. The result is efficient partitioning of hot and cold aisles, close grouping (i.e., space savings), and close distances between computer systems for electrical, mechanical, and IT interconnections and treatments.

[0057] As shown in FIGS. 2A-2G, the walls of the modular data pod may be arranged in a variety of different polygonal shapes including a pentagon (e.g., the modular data pod 50 of FIG. 2A), hexagon (e.g., the modular data pod 60 of FIG. 2B), heptagon (e.g., the modular data pod 70 of FIG. 2C), octagon (e.g., the modular data pod 80 of FIG. 2D), nonagon (e.g., the modular data pod 90 of FIG. 2E), and decagon (e.g., the modular data pod 100 of FIG. 2F). These shapes can also be modified. For example, the octagonal-shaped modular data pod 80 of FIG. 2D can be stretched in one direction to increase the length of two walls of the modular data pod to form modular data pod 80' of FIG. 2G.

[0058] In one embodiment of the present disclosure illustrated in FIG. 2A, modular pentagonal data pod 50 includes a data enclosure 105 including five external wall members 1051, 1052, 1053, 1054 and 1055 that are contiguously joined to one another along at least one edge. For example, edges 55 contiguously join external wall member 1051 to wall member 1052, external wall member 1052 to external wall member 1053, external wall member 1053 to external wall member 1054, external wall member 1054 to external wall member 1055, and external wall member 1055 to external wall member 1051, in the shape of a polygon.

[0059] The pentagonal modular data pod 50 includes server rack 501 positioned internally in the modular data pod 50 in proximity to external wall member 1051, server rack 502 positioned internally in the modular data pod 50 in proximity to external wall member 1052, server rack 503 positioned internally in the modular data pod 50 in proximity to external wall member 1053, server rack 504 positioned internally in the modular data pod 50 in proximity to external wall member 1054, and server rack 505 positioned internally in the modular data pod 50 in proximity to external wall member 1055.

[0060] To define a heat exchange volume 5002 substantially within a central region of the modular data pod 50, server racks 501 and 505, which are illustrated as being spaced apart from one another, may be contiguously joined therebetween via internal wall member 550. Similarly, server racks 501 and 502, which are illustrated as being spaced apart from one another, may be contiguously joined therebetween via internal wall member 510. (As defined herein, an internal wall member is a wall member disposed within the confines of each individual modular data pod defined by the external wall members). Although server racks 502 and 503 and server racks 504 and 505 are also illustrated as being spaced apart from one another, those skilled in the art will recognize that internal wall members similar to internal wall members 510 and 550 may be disposed to contiguously join server racks 502 and 503 or server racks 504 and 505. Additionally, those skilled in the art will also recognize that the first heat exchange volume 5001 need not be tightly confined at each and every position between adjacent server racks to create suitable heat transfer conditions within the modular data pod 50.

[0061] The modular data pod 50 also includes an auxiliary enclosure 515 adjacent to external wall member 1051. In other embodiments, the auxiliary enclosure 515 may be adjacent to one of the external wall members 1051-1055. The auxiliary enclosure 515 includes a close-coupled dedicated cooling system 525 for chiller-less operation in high wet bulb temperature applications which is further described in detail below with respect to FIGS. 3, 4 and 5.

[0062] In one embodiment of the present disclosure as illustrated in FIG. 2B, modular hexagonal data pod 60 includes an enclosure 106 including six external wall members 1061, 1062, 1063, 1064, 1065 and 1066 that are contiguously joined to one another along at least one edge in the shape of a polygon.

[0063] The hexagonal modular data pod 60 includes server rack 601 positioned internally in the modular data pod 60 in proximity to both external wall member 1061 and external wall member 1062, server rack 602 positioned internally in the modular data pod 60 in proximity to external wall member 1063, server rack 603 positioned internally in the modular data pod 60 in proximity to both external wall member 1063 and external wall member 1064, server rack 604 positioned internally in the modular data pod 60 in proximity to both external wall member 1064 and external wall member 1065, server rack 605 positioned internally in the modular data pod 60 in proximity to external wall member 1065, and server rack 606 positioned internally in the modular data pod 60 in proximity to both external wall member 1066 and external wall member 1061.

[0064] In a similar manner as described above with respect to modular data pod 50, to define a heat exchange volume 6002 substantially within a central region of the modular data pod 60, in one embodiment, the server racks 601 and 602, which are illustrated as being spaced apart from one another, may be contiguously joined therebetween via internal wall member 610 between server racks 601 and 602. Again, although the server racks 605 and 606 are also illustrated as being spaced apart from one another, those skilled in the art will recognize that internal wall members similar to internal wall member 610 may be disposed to contiguously join the corresponding server racks 605 and 606. Again, those skilled in the art will also recognize again that the first heat exchange volume 6001 need not be tightly confined at each and every position between adjacent server racks in order for proper intended heat transfer conditions to occur within the modular data pod 60.

[0065] The modular data pod 60 also includes an auxiliary enclosure or compartment 616 adjacent to one of the external wall members 1061 to 1066, with the auxiliary enclosure 616 illustrated as being adjacent to external wall member 1061. Again, the auxiliary enclosure 616 includes a close-coupled dedicated cooling system 626 for chillerless operation in high wet bulb temperature applications which is further described in detail below with respect to FIGS. 3, 4 and 5.

[0066] In one embodiment of the present disclosure as illustrated in FIG. 2C, modular heptagonal data pod 70 includes an enclosure 107 including seven external wall members 1071, 1072, 1073, 1074, 1075, 1076 and 1077 that are contiguously joined to one another along at least one edge in the shape of a polygon.

[0067] The heptagonal modular data pod 70 includes server rack 701 positioned internally in the modular data pod 70 in proximity to both external wall member 1071 and external wall member 1072, server rack 702 positioned internally in the modular data pod 70 in proximity to external wall member 1072 and also in proximity to external wall member 1073, server rack 703 positioned internally in the modular data pod 70 in proximity to external wall member 1073, server rack 704 positioned internally in the modular data pod 70 in proximity to external wall member 1074, server rack 705 positioned internally in the modular data pod 70 in proximity to external wall member 1075, server rack 706 positioned internally in the modular data pod 70 in proximity to external wall member 1076, server rack 707 positioned internally in the modular data pod 70 in proximity to both external wall member 1076 and external wall member 1077, and server rack 708 positioned internally in the modular data pod 70 in proximity to both external wall member 1077 and external wall member 1071.

[0068] In a similar manner as described above with respect to modular data pods 50 and 60, the server racks 701 to 708 are contiguously or substantially contiguously disposed to define heat exchange volume 7002 substantially within a central region of the modular data pod 70.

[0069] Similarly, the modular data pod 70 also includes an auxiliary enclosure 717 adjacent to one of the external wall members 1071 to 1077, with the auxiliary enclosure 717 illustrated as being adjacent to external wall member 1071. Similarly, the auxiliary enclosure 717 includes a close-coupled dedicated cooling system 727 for chillerless operation in high wet bulb temperature applications which is further described in detail below with respect to FIGS. 3, 4 and 5.

[0070] In one embodiment of the present disclosure as illustrated in FIG. 2D, modular octagonal data pod 80 includes an enclosure 108 including eight external wall members 1081, 1082, 1083, 1084, 1085, 1086, 1087 and 1088 that are contiguously joined to one another along at least one edge in the shape of a polygon. The octagonal modular data pod 80 includes server racks 801, 802, 803, 804, 805, 806, 807 and 808, each of which is positioned internally in the modular data pod 80 in proximity to, and in a position in angular relationship with two of the external wall members 1081-1088.

[0071] Again, in a similar manner as described above with respect to modular data pods 50, 60 and 70, the server racks 801 to 808 are contiguously or substantially contiguously disposed to define heat exchange volume 8002 substantially within a central region of the modular data pod 80.

[0072] Similarly, the modular data pod 80 also includes an auxiliary enclosure 818 adjacent to one of the external wall members 1081 to 1088, with the auxiliary enclosure 818 illustrated as being adjacent to external wall member 1081. As described previously, the auxiliary enclosure 818 includes a close-coupled dedicated cooling system 828 for chillerless operation in high wet bulb temperature applications which is further described in detail below with respect to FIGS. 3, 4 and 5.

[0073] In one embodiment of the present disclosure as illustrated in FIG. 2E, modular nonagonal data pod 90 includes an enclosure 109 including nine external wall members 1091, 1092, 1093, 1094, 1095, 1096, 1097, 1098 and 1099 that are contiguously joined to one another along at least one edge, e.g., edges 99, to form the shape of a polygon. The nonagonal modular data pod 90 includes eight server racks 901, 902, 903, 904, 905, 906, 907 and 908 positioned internally in the modular data pod 90 in proximity to, and in a position in angular relationship with, at least one of the external wall members 1091-1099.

[0074] In a similar manner as described above with respect to modular data pods 50, 60, 70 and 80, the server racks 901 to 808 are contiguously or substantially contiguously disposed to define heat exchange volume 9002 substantially within a central region of the modular data pod 90.

[0075] The modular data pod 90 also includes an auxiliary enclosure 919 adjacent to one of the external wall members 1091 to 1099, with the auxiliary enclosure 919 illustrated as being adjacent to external wall member 1091. As described above, the auxiliary enclosure 919 includes a close-coupled dedicated cooling system 928 for chillerless operation in high wet bulb temperature applications which is further described in detail below with respect to FIGS. 2, 3 and 4.

[0076] In one embodiment of the present disclosure as illustrated in FIG. 2F, modular decagonal data pod 100 includes an enclosure 110 including ten external wall members 1101, 1102, 1103, 1104, 1105, 1106, 1107, 1108, 1109 and 1110 that are contiguously joined to one another along at least one edge, e.g., edges 111, in the shape of a polygon. The decagonal modular data pod 100 includes eight server racks 1001, 1002, 1003, 1004, 1005, 1006, 1007 and 1008 positioned internally in the modular data pod 1000 in proximity to, and in a position in angular relationship with, at least one of the ten external wall members 1101-1110.

[0077] Again, in a similar manner as described above with respect to modular data pods 50, 60, 70, 80 and 90, the server racks 1001 to 1008 are contiguously or substantially contiguously disposed to define heat exchange volume 102 substantially within a central region of the modular data pod 100.

[0078] Again, the modular data pod 100 also includes an auxiliary enclosure 1010 adjacent to one of the external wall members 1101 to 1110, with the auxiliary enclosure 1010 illustrated as being adjacent to external wall member 1101. Again, the auxiliary enclosure 1010 includes a close-coupled dedicated cooling system 1020 for chillerless operation in high wet bulb temperature applications which is further described in detail below with respect to FIGS. 3, 4 and 5.

[0079] As described above with respect to FIG. 2G, in one embodiment of the present disclosure as illustrated in FIG. 2G, the octagonal-shaped modular data pod 80 of FIG. 2D can be stretched in one direction to increase the length of two walls of the modular data pod to form modular data pod. More particularly, octagonal modular data pod 80' includes an enclosure 108' including external wall members 1081', 1082', 1083', 1084', 1085', 1086', 1087' and 1088' that are contiguously joined to one another along at least one edge, e.g., edges 88', in the shape of a polygon.

[0080] The octagonal modular data pod 80' includes respectively server racks 801' and 802' that are positioned internally in the modular data pod 80' in proximity to external wall member 1081' and external wall member 1082', respectively. Adjacent server racks 803a', 803b', 803c' and 803d' are also positioned internally in the octagonal modular data pod 80' each in proximity to elongated external wall member 1083'. Server racks 804', 805' and 806' are positioned internally within the modular data pod 80' in proximity to external wall members 1084', 1085' and 1085', respectively. Adjacent server racks 807a', 807b', 807c' and 807d' are also positioned internally in the octagonal modular data pod 80' each in proximity to elongated external wall member 1087'. Server rack 808' is also positioned internally in the octagonal modular data pod 80' in proximity to external wall member 1088'.

[0081] Contiguous external wall members 1088', 1081' and 1082' form a first end 88'a of the modular data pod 80' while correspondingly contiguous external wall members 1084', 1085' and 1086' form a second end 88'b of the modular data pod 80'. Similarly, as described above with respect to modular data pods 50, 60, 70, 80, 90 and 100, the server racks 801' through 808' are contiguously or substantially contiguously disposed to define heat exchange volume 8002' substantially within a central region of the modular data pod 80.

[0082] Again, the modular data pod 80' also includes an auxiliary enclosure 818' adjacent to one of the external wall members 1081' to 1088', with the auxiliary enclosure 818' illustrated as being adjacent to external wall member 1081'. Similarly, the auxiliary enclosure 818' includes a close-coupled dedicated cooling system 828' for chillerless operation in high wet bulb temperature applications which is further described in detail below with respect to FIGS. 3, 4 and 5.

[0083] FIG. 3 is a sectional side view (i.e., elevation view) of a generic modular data pod generically designated as modular data pod 10. FIG. 3 illustrates an airflow pattern within the airflow circuit of the cooling system for a modular data pod. The modular data pods may use a variety of airflow patterns and hot and cold aisle configurations. For example, as shown in FIG.

3, the hot aisle can be at the rear or sides of the server rack and the cold aisle can be at the center of the modular data pod. This airflow pattern provides a natural chimney or upward convection of hot air within the hot aisle while the cold aisle is a natural downward airflow pattern of cold air that can be assisted by the fans. As another example, the hot aisle could be in the center and the cold aisle would be at the ear of the server racks. The top of the racks could also be modified to allow hot air to flow within the rack or shelf itself and exit at either the top or the bottom of the racks. With respect to airflow patterns, the hot air may flow in an upward, downward, or other direction.

[0084] The modular data pods may also be designed to maintain neutralization temperatures at various locations in the airflow circuit. In the embodiment of FIG. 3, the primary cooling occurs at the rear of the server racks or shelving.

[0085] The fans may be arranged in other ways to create other airflow patterns known to those skilled in the art. The fans may be positioned anywhere within the modular data pod. For example, the fans may be positioned in the upper or lower portion of the modular data and they may be oriented horizontally or vertically. The position and type of fan may depend on the latest advances in fan technology, including improvements in fan efficiency.

[0086] The cooling coil configuration shown in FIG. 3 provides redundancy by providing three ways (N+3) of cooling the air within the modular data pod. The one or more batteries may be mounted within the floor chamber as shown in FIG. 3 or somewhere within the cold aisle.

[0087] More particularly, modular data pod 10 generically represents, for example, modular data pods 50, 60, 70, 80, 90, 100 and 80' described above with respect to FIGS. 2A through 2G, respectively. Modular data pod 10 includes a data pod covering member 12 that substantially forms a roof of the modular data pod 10 and which may be in contact with, and supported by, for example, upper edges 1051a and 1053a of the external wall members 1051 and 1053 of data pod 50 (see FIG. 2A) that are explicitly numbered. The external wall members 1051 to 1055 define an aperture 12' at an upper end 11 of the enclosure 105 and also define inner surfaces 1051a, 1052a, 1053a, 1054a and 1055a of the external wall members 1051 to 1055, respectively (see FIG. 2A). Thus, the data pod covering member 12 is configured and disposed to substantially cover the aperture 12'.

[0088] The computer racks 501 to 505 each define first sides 501a, 502a, 503a, 504a, 505a in relationship with the inner surfaces 1051a through 1055a of the external wall members 1051 to

1055, respectively, to define a first volume or hot aisle 5001 between the inner surfaces 1051a, 1052a, 1053a, 1054a and 1055a and the first sides 501a, 502a, 503a, 504a, 505a defined by the computer racks 501 to 505, respectively.

[0089] First cooling coils 531 and 533 are illustrated disposed on the first sides 501a and 503a of server racks 501 and 503, respectively.

[0090] The computer racks 501 to 505 each define second sides 501b, 502b, 503b, 504b, 505b, respectively, that are substantially oriented to interface at least another second side to define a second volume therebetween, e.g., heat exchange volume or cold aisle 5002 described above with respect to FIG. 2A. Those skilled in the art will recognize that heat exchange volumes 6002, 7002, 8002, 9002, 102 and 8002' illustrated in FIGS. 2B, 2C, 2D, 2E, 2F and 2G similarly form second volumes defined by the respective second sides of the computer racks.

[0091] The modular data pod 10 also includes a computer rack covering member 14 that is configured and disposed generally above the server racks 501 through 505 to substantially enclose the second volume or heat exchange volume 5002. The data pod covering member 12 and the computer rack covering member 14 form a third volume 20 that couples the first volume 5001 to the second volume 5002.

[0092] An air circulator support structure 16 is also configured and disposed generally above the server racks 501 through 505 and forms part of the computer rack covering member 14. The air circulator support structure 16 is generally disposed above the second volume 5002 to define a central upper boundary of the second or heat exchange volume 5002. The air circulator support structure 16 includes at least one air circulator, of which three air circulators 16a, 16b and 16c are illustrated circulating air downwardly, as shown by arrows **A**. The second volume 5002 forms a cold aisle and the downwardly circulating air circulates through the servers 511a, 511b...511n disposed on server rack 501 and through the servers 533a, 533b...533n to remove heat therefrom and through the first cooling coils 531 and 533, where the air heated by the servers is then cooled. (Similar cooling coils, not shown, are disposed on first sides 502a, 504a and 505a of server racks 502, 504 and 505, respectively).

[0093] The now cooled air moves upwardly through the first volume 5001 as shown by the arrows **B** and further moves upwardly to the third volume 20. In one embodiment, second cooling coils 21 and 23 are disposed in the path of the circulating air at disposed between the computer rack covering member 14 and the data pod covering member 12, and in a position generally directly overhead corresponding first cooling coils 531 and 533 of server racks 501 and 503, respectively, to define the boundaries of the third volume 20. The second cooling coils 21 and 23 further cool the air, which then moves into the third volume 20 as shown by the arrows **C** where the air is drawn through the suction sides of the air circulators 16a, 16b, and 16c.

[0094] In one embodiment, the air circulator support structure 16 further includes a third cooling coil 30 that is disposed on the suction sides of the air circulators 16a, 16b, 16c for further cooling of the air circulating through the air circulators 16a, 16b, 16c.

[0095] Thus the one or more air circulators 16a, 16b and 16c are configured to continuously circulate air through the first volume 5001, the second volume 5002, and third volume 5003.

[0096] In one embodiment, the cooling coils 531, 533, 21, 22, and 30 include a refrigerant, non-aqueous, gas or liquid as the cooling medium. As defined herein, the cooling coils 531, 533, 21, 22, and 30 are heat exchange members.

[0097] In one embodiment, the modular data pod 10 includes a dedicated electrical power supply, illustrated as one or more batteries 32 at a lower end 11' of the data pod enclosure 105. The one or more batteries may be in electrical communication with a direct current to alternating current (DC/AC) inverter (not shown) that is in turn in electrical communication with an offsite electrical power grid (not shown).

[0098] Consequently, in the exemplary embodiment of FIG. 3, a hot aisle is formed between a back side of the IT cabinets or computer server racks and the walls of the modular data pod and a cold aisle is formed by a front side of the computer racks. In other words, the computer racks or shelving are positioned to create a hot aisle and a cold aisle. In other embodiments, the computer racks are positioned in other ways to create other hot and cold aisle configurations. In yet other embodiments, the hot and cold aisles are strictly contained.

[0099] The fans, the coils, the computer racks, the one or more batteries, the hot aisle, the cold aisle, and the piping tunnels are all positioned within the modular data pod envelop or container. Additional compartments are attached to a side of the modular data pod. These compartments include an exchanger module, pipes for the cooling system, a pump for pumping cooling fluid (e.g., refrigerant or de-ionized water) through the pipes, cable buses, and electrical compartments. These compartments may be waterproof. A user may access these compartments, e.g., to perform deployment or maintenance tasks, via an access door.

[00100] The modular data pods may use a variety of airflow patterns and hot and cold aisle configurations. For example, as shown in FIG. 3, the hot aisle can be at the rear or sides of the server rack and the cold aisle can be at the center of the modular data pod. This airflow pattern provides a natural chimney or upward convection of hot air within the hot aisle while the cold aisle is a natural downward airflow pattern of cold air that can be assisted by the fans. As another example, the hot aisle could be in the center and the cold aisle would be at the ear of the server racks. The top of the racks could also be modified to allow hot air to flow within the rack or shelf itself and exit at either the top or the bottom of the racks. With respect to airflow patterns, the hot air may flow in an upward, downward, or other direction.

[00101] The modular data pods may also be designed to maintain neutralization temperatures at various locations in the airflow circuit. In the embodiment of FIG. 3, the primary cooling occurs at the rear of the server racks or shelving.

[00102] The fans may be arranged in other ways to create other airflow patterns known to those skilled in the art. The fans may be positioned anywhere within the modular data pod. For example, the fans may be positioned in the upper or lower portion of the modular data and they may be oriented horizontally or vertically. The position and type of fan may depend on the latest advances in fan technology, including improvements in fan efficiency.

[00103] The cooling coil configuration shown in FIG. 3 provides redundancy by providing three ways (N+3) of cooling the air within the modular data pod. The one or more batteries may be mounted within the floor chamber as shown in FIG. 3 or somewhere within the cool aisle.

[00104] The modular data pods are designed to include significant ramp up (or modularity) capabilities in power, data collection, and HVAC cooling capacity. Each pod may be designed to handle a spectrum of server rack loads from the low end, i.e., about 1-2 kW per server rack, to the high end, i.e., about 40 kW per server rack.

[00105] The data pods may use both natural convection and air movement devices (e.g., fans or other devices that can move air or create air patterns) to move air through the hot aisle/cold aisle circuit. The air movement devices may be coupled to energy efficient VFDs that can control the air movement devices using state of the art control strategies that monitor both cold aisle temperature and server and rack loading according to cloud computing technology.

[00106] The cooling coils in the modular data pods may employ micro-channel coil technology. These cooling coils require far less depth and surface area than typical cooling coils.

The modular data pods may be built with removable coil sections that are adapted to accept replacement coils, such as coils that provide higher output or that incorporate future advances in coil technology. The pod main coil circuit may include a hybrid dual coil systems consisting of a standard refrigerant evaporation coil, a receiver, and a tandem micro-channel coil. This pairing of coil technology enables greater heat transfer capabilities by using the benefits of refrigerant "change of state." Alternatively, the system can include a straight liquid-pumped system without change of state.

[00107] The modular data pods may be built to various seal classifications. For example, the membrane sealants, wall construction, gasketing, and door treatments may be adjusted to meet various seal requirements including the seal requirements promulgated by Sheet Metal and Cooling Contractors' National Association (SMACNA). The modular data pods may also include non-conductive fire suppression systems.

[00108] The modular data pods may be designed to receive either manufactured server racks or custom designed rack and shelving components. Custom racks or shelving components can be include as part of the overall physical structure of the modular data pod to provide a strong "skeletal" system that can be easily removed, adapted, and modified, to conform to the various types of server supports.

[00109] The modular data pod structure may be a durable but light structure. For example, it may be made of a composite of light steel square tubing or I-beams and heavy gauge aluminum structural members. The walls and roof of the modular data pods can include either double or single-wall insulated panels. They can be constructed of metal, plastic, glass, or other composite materials. The modular data pods can have structural skeletal framing, or receive skin treatments that have structural capabilities. The type and extent of insulation used in the modular data pod may vary based on the environment in which the pod is deployed or any other requirements of an operator.

[00110] The exterior of the modular data pods may be treated with energy-saving reflective paints, surface coatings, or solar membranes (e.g., photovoltaic) or coatings. The roof structure may include supports and hold downs for solar panels in farm-type applications.

[00111] The modular data pod structure can be fitted with lifting lug and support structures than will enable it to be lifted from above or below using forklifts, gantry, cranes, helicopters, or other rigging equipment. The server racks or shelving may include restraints to secure the server racks and other equipment in the pod for transport.

[00112] The data pods can be fitted with packaged humidity controls and systems. For example, the modular data pods can be fitted with membrane, vapor barriers, sealants, and other humidity control features to limit migration of humidity from external spaces or the environment into the data pod envelop.

[00113] The modular data pods may or may not include access doors. The doors may include double marine insulated vision glass for external inspection of the modular data pod. The modular data pods may be fitted with lighting and service receptacles, both internally and externally as required. All electrical circuits may be protected with ground fault protection. Modular data pods intended for outdoor use may include structure for lightning protection.

[00114] The modular data pods may be pre-stacked with computer racks at a centrally-controlled location before they are deployed on site. This saves the time and expense required to stack a pod with computer racks on site, especially in remote areas.

[00115] FIG. 4 is a plan view (i.e., sectional top view) of the octagonal modular data pod 80 of FIG. 2D showing an octagonal upper coil deck 838a that vertically supports an array 840 of vertically disposed upper cooling coils 841, 842, 843, 844, 845, 846, 847 and 848 disposed above respective server racks 801, 802, 803, 804, 805, 805, 806, 807 and 808 and each of which forms a boundary in an analogous manner to second cooling coils 21 and 22 that are disposed in the path of the circulating air at disposed between the computer rack covering member 14 and the data pod covering member 12 to define the boundaries of the third volume 20 as described with respect to modular data pod 10 in FIG. 3. Lower rear coils on the back side (not shown) of each of the computer racks 801 through 808 are analogous to refrigerant coils 531 and 533 in FIG. 3. The lower rear coils are the first stage or the primary way of cooling the air flowing in hot aisles 851, 852, 853, 854, 855, 856, 857 and 858. Hot aisle 851 is formed between the rear side of server rack 801 and external wall members 1081 and 1082. Hot aisle 852 is formed between the rear side of server rack 802 and external wall members 1082 and 1083. Similarly, hot aisle 853 is formed between the rear side of server rack 803 and external wall members 1083 and 1084. Hot aisle 854 is formed between the rear side of server rack 804 and external wall members 1084 and 1085. Those skilled in the art will recognize how hot aisles 855 through 858 are similarly formed.

[00116] The upper vertical coil array 840, which is in an octagonal shape, is the secondary way of cooling (n+2) the air flowing in the hot aisles 851 through 858. Piping connections 840a and 840b provide fluidic communication with a refrigerant gas fluid supply path 2100a in fluid communication with the environment 5 of the electronic equipment and fluid return path 2100b also in fluid communication with the environment 5 of the electronic equipment described above with respect to a close-coupled cooling system 2100 described below with respect to FIG. 6.

[00117] An overhead flat-plate coil 860, analogous to third cooling coil 30 that is disposed on the suction sides of the air circulators 16a, 16b, 16c may be positioned at the center (as shown) of the modular data pod 80 as the third way of cooling (n+3) the air flowing from the hot aisles 851 through 858. This third coil 860 can also be used as a "trim" coil if the heat load at any server rack coil requires supplemental cooling. The third coil 860 handles the occasional overloading at specific server racks. The third coil 860 can also be used as an energy-saving coil for extremely low-load heat output conditions. The control strategies may include shutting down the primary or main coils (not shown) and activating the third coil 860 to handle low system loads. In a similar manner, piping connections 860a and 860b provide fluidic communication with the refrigerant gas fluid supply path 2100a in fluid communication with the environment 5 of the electronic equipment and fluid return path 2100b also in fluid communication with the environment 5 of the electronic equipment described above with respect to close-coupled cooling system 2100 described below with respect to FIG. 6.

[00118] FIG. 5 is a plan view (i.e., sectional top view) at the ceiling level of modular data pod 80 showing a ceiling fan assembly 870. The computer racks 801 through 804 and 806 through 806 each include corners 801a, 801b for server rack 801, corners 802a, 802b for server rack 802, corners 803a, 803b for server rack 803, corners 804a, 804b for server rack 804, corners 806a, 806b for server rack 806, corners 807a, 807b for server rack 807 and corners 808a, 808b for server rack 808. The server racks 801 through 804 and 806 through 808 are shown disposed in a circular pattern with corners 801a and 801b of rack 801 in contact with the corners 808b and 802a of adjacent computer racks 808 and 802, respectively. Those skilled in the art will understand the arrangement of the corners of the remaining server racks 802, 803, 804 and 806 and 807. This arrangement of the server racks 801 to 804 and 806 to 808 in a circular pattern provides a partition between the hot aisles 851 to 854 and 856 to 858 and the cold aisle formed by volume 8002. In some embodiments, the pie-shaped air spaces 851', 852', 853', 856', 857' and

858' between the computer racks 801 and 802, 802 and 803, 803 and 804, 806 and 807, 807 and 808, 808 and 801, respectively, may be partitioned off from the cold aisle 8002 and form part of the hot aisles 851, 852, 853, 854, 856, 857 and 858. As shown in FIG. 5, the modular data pod may fit seven server racks (e.g., 40kW server racks). There is a space 805' between two server racks, e.g., server racks 804 and 806 as shown, to give a human operator access to the server racks 801-804 and 806-808 via access door 81. In some embodiments, the modular data pod does not include an access door. In these embodiments, the modular data pod may fit eight server racks.

[00119] Fans 871 of fan assembly 870 and lighting 880 are positioned at the ceiling level of the modular data pod 80. The fans are driven by variable-frequency drives (VFDs) (not shown), which are controlled by the Building Management System (BMS). The BMS can increase or decrease the fan speed based on temperature and/or the loading of the computer racks. For example, the BMS may increase the fan speed as the temperature within the hot aisles increases.

[00120] FIG. 5 also shows the cooling pipes 882 that enter and exit a lower pipe chase (not shown). The lower pipe chase may be removable and may be located below auxiliary enclosure 818 that includes the heat exchangers (the complete close-coupled cooling system 4000 including condensers 1200a, 1200b and 1300 described below with respect to FIG. 6) and electrical equipment of the modular data pod assembly. The cooling pipes 882 include six pipes: two supply pipes for supplying cooling fluid to the coils of the modular data pod, two return pipes for returning cooling fluid to the cooling system, and two express reverse returns. The modular data pod assembly may include waterproof partitions between the various compartments.

[00121] The exemplary modular data pods 10, 50, 60, 70, 80, 90, 100 and 80' are designed to be universal in their use for computer data storage. They can be used for singular pod deployment. They can be trailerized for temporary or semi-permanent use. They can be used indoors in warehouse or suite-type applications. They can be deployed in outdoor or “farm”-type environments. The benefit of their space-saving shape, size, and relative weight allows them to be implemented where it is not practical logistically or otherwise to use other large and heavy “containerized” modular products.

[00122] FIG. 6 depicts a close-coupled cooling system 4000 designed to cool electronic equipment of an IT data center. The system 4000 includes four independent, yet cooperating, fluid circuits designated as 4100, 4200, 4300, and 4400, respectively.

[00123] The first circuit 4100 interfaces with the electronic equipment of the IT data center, and provides cooling to the electronic equipment via a first fluid. The first fluid may contain a liquid refrigerant R134a or similar refrigerants. The first circuit 4100 includes at least one evaporator coil (not shown in FIG. 6, but see, e.g., the evaporator coils of FIG. 12) that is in thermal communication with the electronic equipment and extracts heat from the electronic equipment to the first fluid. As the first fluid flows from an inlet of the at least one evaporator coil to an outlet of the evaporator coil, heat is transferred from the electronic equipment to the first fluid. In one embodiment, the first fluid enters the at least one evaporator coil at a temperature of approximately 23°C. During heat transfer or exchange, the first fluid transforms from a liquid state to an at least partially vapor state.

[00124] The first circuit 4100 includes a fluid supply path 4100a and a fluid return path 4100b coupled to the inlet and outlet of the at least one evaporator coil, respectively. The fluid supply path 4100a delivers the first fluid in a liquid state to the inlet of the at least one evaporator coil, and the fluid return path 4100b receives the first fluid in an at least partially vapor state from the outlet of the at least one evaporator coil. The first circuit 4100 includes a liquid refrigerant pump 4120 that pumps the first fluid through the fluid supply path 4100a. The first circuit 4100 also includes a variable frequency drive 4125 that regulates capacity and motor speed of the liquid refrigerant pump 4120.

[00125] The first circuit 4100 further includes a main condenser 1300 that receives the first fluid from the fluid return path 4100b. The main condenser 1300 is a refrigerant-to-water heat exchanger that cools the first fluid that passes through the main condenser 1300 and condenses the first fluid from the at least partially vapor state to the liquid state. In one embodiment, to fully condense and cool the first fluid, the main condenser 1300 is maintained at a predetermined condensing temperature of approximately 23.3°C or lower.

[00126] Further, the first circuit 4100 may include (1) a fluid path 4100c that carries the first fluid from the main condenser 1300 to a refrigerant liquid receiver 4128, and (2) a fluid path 4100d that carries the first fluid from the refrigerant liquid receiver 4128 to a suction side of the liquid refrigerant pump 4120.

[00127] The refrigerant liquid receiver 4128 is configured to detect and regulate the temperature of the first fluid. Specifically, the refrigerant liquid receiver 4128 is configured to reduce the temperature of the first fluid by thermally coupling the first circuit 4100 to the fourth circuit 4400. In some embodiments, the refrigerant liquid receiver 4128 maintains the first fluid at a predetermined temperature between approximately 22.2°C and approximately 23.3°C.

[00128] The refrigerant liquid receiver 4128 may also include components (e.g., a detector and a controller) configured to detect and regulate the liquid level of the first fluid contained in the refrigerant liquid receiver 4128. A low liquid level in the refrigerant liquid receiver 4128 may cause cavitation problems at the liquid refrigerant pump 4120. To avoid this problem, the refrigerant liquid receiver 4128 includes a liquid level controller 4127 that detects the liquid level in the receiver 4128 and triggers an alarm if a low liquid level is detected. Also, the refrigerant liquid receiver 4128 may collect the first fluid in the first circuit 4100 when the cooling system 4000 is in an idle or standby mode.

[00129] The first circuit 4100 also includes a temperature sensor 4126 that is located on the fluid path 4100c at the exit of the main condenser 1300. The temperature sensor 4126 detects the temperature of the first fluid when it exits from the main condenser 1300. The readings of the temperature sensor 4126 reflect the temperature of the main condenser 1300.

[00130] The second circuit 4200 interfaces with the first circuit 4100 at the main condenser 1300a, where the second circuit 4200 performs heat exchange with the first circuit 4100. Specifically, the second circuit 4200 has a second fluid flowing through it. The second fluid removes heat from the first fluid of the first circuit 4100 at the main condenser 1300a. In one embodiment, upon exiting the main condenser 1300a, the second fluid has a temperature of approximately 22.8°C.

[00131] The second circuit 4200 includes a fluid path 4200a that carries the second fluid from a cooling tower, fluid cooler, or dry cooler (not shown in FIG. 6, but see, e.g., cooling tower CT-1A of FIG. 14) to the second circuit 4200. The fluid path 4200a is fluidly coupled to a fluid path 4200d which delivers the second fluid to the main condenser 1300. The second circuit further includes a fluid path 4200h that receives the second fluid from the main condenser 1300. The fluid path 4200h is fluidly coupled to a fluid path 4200e which carries the second fluid to a fluid path 4200m that delivers the second fluid back to the cooling tower, fluid cooler or dry cooler.

[00132] In some embodiments, the second circuit 4200 includes a pump to facilitate the flow of the second fluid through the second circuit 4200. In one embodiment, the second fluid is regulated at a flow rate of approximately 315 gpm. The pump may be in any of the following forms: a central pumping and cooling tower, dry cooler, fluid cooler or other chilled, or well water circuit.

[00133] Further, the second circuit 4200 may include a mixed water temperature sensor 4220 that monitors the temperature of the second fluid before it enters the main condenser 1300. The second circuit 4200 may also include a water regulating valve 4214, which operatively communicates with the temperature sensor 4126 of the first circuit 4100. The water regulating valve 4214 is configured to regulate the flow rate of the second fluid in proportion to the readings of the temperature sensor 4126.

[00134] For instance, to maintain the main condenser 1300 at or below a predetermined condensing temperature (e.g., 23.3°C), the water regulating valve 4214 adjusts the flow rate of the second fluid based on the temperature of the main condenser 1300 as measured by the temperature sensor 4126. For example, if the temperature sensor 4126 has a reading significantly higher than the predetermined condensing temperature (e.g., 23.3°C) of the main condenser 1300, the water regulating valve 4214 then significantly increases the flow rate of the second fluid flowing through the second circuit 4200 to thereby rapidly reduce the temperature of the main condenser 1300. However, if the temperature sensor 4126 has a reading slightly higher than the predetermined condensing temperature (e.g., 23.3°C), the water regulating valve 4214 then slightly increases the flow rate of the second fluid flowing through the second circuit 4200.

[00135] In some embodiments, to maintain the temperature of the main condenser 1300 at or below the predetermined condensing temperature (e.g., 23.3°C), the second fluid is maintained at a threshold temperature of approximately 18.9°C or lower.

[00136] To maintain the second fluid at or below the threshold temperature (e.g., 18.9°C), the second circuit 4200 may include at least one cooling mode to cool the second fluid. For example, the second circuit 4200 may include a simple free cooling mode in which the second circuit 4200 relies on the atmosphere to cool the second fluid via a cooling tower, fluid cooler, or dry cooler. In operation, after heat is transferred from the first fluid to the second fluid at the main condenser 1300, the second fluid follows the fluid paths 4200h, 4200e and proceeds to a cooling tower, fluid cooler or dry cooler (not shown in FIG. 6) to reject its heat into the atmosphere. The cooled second fluid then follows the fluid paths 4200a and 4200d back to the main condenser 1300 to cool the first fluid. It is envisioned that the second fluid may continuously repeat the above cycle.

[00137] In one embodiment, the simple free cooling mode maintains the second fluid at or below the threshold temperature (e.g .18.9°C), only when the wet bulb temperature of the IT data center is below 17.2°C. If the wet bulb temperature is above 17.2°C, the second fluid may exceed its threshold temperature.

[00138] Further, the second circuit 4200 may include a mechanical compressed cooling mode, in which the third circuit 4300 cools the second circuit 4200 through mechanical compression cycles. A third fluid flows through the third circuit 4300. The third fluid may contain a liquid refrigerant, such as R134a, or any other suitable refrigerant.

[00139] The third circuit 4300 includes an atmospheric sub-cooler exchanger 1200a to subcool the second fluid 4200 before the second fluid arrives at the main condenser 1300. The atmospheric sub-cooler exchanger 1200a is a refrigerant-to-water heat exchanger that trims or cools at least a portion of the second fluid. The third circuit 4300 may also include a trim condenser 1200b, which is a refrigerant-to-water heat exchanger that transfers heat in the third fluid, which is the heat that the third fluid has absorbed from the second fluid at the atmospheric sub-cooler exchanger 1200a, back to the second fluid. The third circuit 4300 may further include a sub-cooler compressor 4310 that compresses the third fluid.

[00140] The third circuit 4300 includes a fluid path 4300a that carries the third fluid from the atmospheric sub-cooler exchanger 1200a to the sub-cooler compressor 4310 for compression, and a fluid path 4300b that carries the compressed third fluid to the trim condenser 1200b. Additionally, the third circuit 4300 includes a fluid path 4300c that carries the third fluid from the trim condenser 1200b to a metering device, or a thermal expansion valve 4311, which expands the third fluid back to the atmospheric sub-cooler exchanger 1200a. It is envisioned that the third fluid may continuously flow through the third circuit 4300 as long as the third circuit 4300 is activated.

[00141] In some embodiments, the third circuit 4300 is activated only when the second fluid exceeds its threshold temperature (e.g., 18.9°C), which may occur when the wet bulb temperature is over 17.2°C. The cooling capacity of the third circuit 4300 may be regulated in direct proportion to the wet bulb temperature that is in excess of 17.2°C, as illustrated in Table 1.

Table 1

Wet Bulb Temperature	Cooling capacity of the third circuit 4300
63 wb (17.2°C)	0 tons
64 wb (17.8°C)	13 tons
65 wb(18.3°C)	26 tons
66 wb(18.9°C)	39 tons
67 wb(19.4°C)	52 tons
68 wb(20°C)	65 tons
69 wb(20.6°C)	78 tons
70 wb(21.1°C)	91 tons

[00142] The third circuit 4300 closely controls the temperature of the second fluid by trimming and cooling the temperature of the second fluid one degree at a time. For instance, if the second fluid temperature rises above its threshold temperature by one degree, the third circuit 4300 then reduces the temperature of the second fluid by one degree.

[00143] In one embodiment, for efficiency reasons, the second circuit 4200 directs a small portion of the second fluid to perform heat exchange with the third fluid, before the second fluid enters the main condenser 1300. Specifically, the second circuit 4200 includes a splitter tee 4210 on the fluid path 4200d before an inlet of the main condenser 1300. The splitter tee 4210 diverts a portion of the second fluid, approximately one third of the second fluid, to an inlet of the atmospheric sub-cooler exchanger 1200a. In some embodiments, the approximately one third of the second fluid has a temperature of 22.2°C at the inlet of the atmospheric sub-cooler exchanger 1200a.

[00144] The second circuit 4200 may include another splitter tee 4211 on the fluid path 4200d upstream from the splitter tee 4210. The splitter tee 4211 has allows the approximately one third of the second fluid to flow from an outlet of the atmospheric sub-cooler exchanger 1200a back to the fluid path 4200d. At the splitter tee 4211, the approximately one third of the second fluid rejoins the remaining two thirds of the second fluid. The blended second fluid then proceeds to the main condenser 1300. It is envisioned that the blended second fluid has a temperature of approximately 18.9°C before entering the main condenser 1300.

[00145] Additionally, for efficiency reasons, the second circuit 4200 may direct only a small portion of the second fluid to perform heat exchange with the third fluid, after the second fluid exits from the main condenser 1300. Specifically, the second circuit 4200 includes a splitter tee 4212 on the fluid path 4200h at the exit of the main condenser 1300. The splitter tee 4212 diverts approximately one third of the second fluid via a fluid path 4200i to the trim condenser 1200b to reclaim heat from the third fluid. It is envisioned that at an outlet of the trim condenser 1200b, the approximately one third of the second fluid has a temperature of approximately 27.4°C. The second circuit 4200 may include an additional splitter tee 4213 on the fluid path 4200h downstream from the splitter tee 4212. The splitter tee 4213 allows the approximately one third of the second fluid exiting from the trim condenser 1200b to join the rest of the second fluid. At the splitter tee 4213, the approximately one third of the second fluid rejoins the remaining two thirds of the second fluid. It is envisioned that the blended second fluid may have a temperature of approximately 26.4°C at the splitter tee 4213. The blended second fluid then together follows the fluid paths 4200e, 4200m towards the exit of the second circuit 4200.

[00146] In some embodiments, the third circuit 4300 does not include the atmospheric sub-cooler exchanger 1200a or the trim condenser 1200b. Rather, the third circuit 4300 includes a trim chiller which is configured to cool the entire IT data center.

[00147] In one embodiment, the second circuit 4200 may exclusively have only one cooling mode, either the simple free cooling mode or the mechanical compressed cooling mode described above.

[00148] In another embodiment, the second circuit 4200 may have both of the cooling modes that alternate with each other. For instance, the second circuit 4200 switches to the simple free cooling mode when the wet bulb temperature is at or below a threshold temperature, e.g., 17.2°C, and switches to the mechanical compressed cooling mode once the wet bulb temperature exceeds the threshold temperature.

[00149] In other embodiments, the two cooling modes cooperate with other, and the second circuit 4200 may operate in both cooling modes concurrently. In these embodiments, the simple free cooling mode is always on, such that the simple free cooling mode remains active regardless of the wet bulb temperature. On the other hand, the mechanical compressed cooling mode, e.g., the third circuit 4300, is activated only when the simple free cooling mode alone cannot maintain the second fluid at or below the threshold temperature, e.g., 18.9°C, such as when the wet bulb temperature is above the threshold temperature, e.g., 17.2°C. In these embodiments, when the wet bulb temperature is at or below its threshold temperature, the second circuit 4200 relies solely on the atmosphere for cooling. Once the wet bulb temperature reaches beyond its threshold temperature, the third circuit 4300 is activated and is controlled to generate cooling capacity in proportion to the wet bulb temperature that is in excess of the threshold temperature. It is envisioned that the third circuit 4300 can be turned on and off automatically without user intervention. For instance, the atmospheric sub-cooler exchanger 1200a automatically becomes active or inactive as the wet bulb temperature crosses its threshold temperature.

[00150] Statistically, the cooling system 4000 operates exclusively in the simple free cooling mode for approximately 95% of the operating time. The mechanical compressed cooling mode is turned on for approximately 5% of the operating time. In a geographical area where the wet bulb temperature is about 18.3°C, the cooling system 4000 runs exclusively in the simple free cooling mode virtually all year round and turns on the mechanical compressed cooling mode for less than 0.04% of the operating time. If the area has a wet bulb temperature of about 20.6°C, the mechanical compressed cooling mode is active for about 3% of the operating time. In all these scenarios, a traditional, large, oversized cooling electrical infrastructure as in the prior art would rely on mechanical compression cycles for about 40-60% of its operating time, thus inducing a much higher operation cost than that of the cooling system 4000.

[00151] In addition to the second circuit 4200, the fourth circuit 4400 may also perform heat exchange with the first circuit 4100. Specifically, the fourth circuit 4400 interfaces with the first circuit 4100 at the refrigerant liquid receiver 4128 where the fourth circuit 4400 condenses and cools the first fluid via a fourth fluid that flows through the fourth circuit 4400. The refrigerant liquid receiver 4128 has a sub-cooler coil 4129, which is an evaporator thermally coupled to both the first circuit 4100 and the fourth circuit 4400.

[00152] The fourth circuit 4400 includes a sub-cooler compressor 4410 configured to compress the fourth fluid and a sub-cooler condenser 1300a which transfers heat from the fourth circuit 4400 to the second circuit 4200. Both the sub-cooler compressor 4410 and the sub-cooler condenser 1300a are fluidly coupled to the sub-cooler coil 4129 of the refrigerant liquid receiver 4128.

[00153] The fourth circuit 4400 includes a fluid path 4400a that carries the fourth fluid from the receiver sub-cooler coil 4129 to a suction side of the sub-cooler compressor 4410 for compression, a fluid path 4400b that carries the compressed fourth fluid from the sub-cooler compressor 4410 to the sub-cooler condenser 1300a, and a fluid path 4400c that carries the fourth fluid from the sub-cooler condenser 1300a to a thermal expansion valve 4420, which expands the fourth fluid and provides the expanded fourth fluid to the sub-cooler coil 4129.

[00154] In some embodiments, the fourth circuit 4400 is automatically turned on and off based on the conditions detected by the refrigerant liquid receiver 4128. For instance, the fourth circuit 4400 becomes active when the liquid level detected by the refrigerant liquid receiver 4128 drops below a predetermined threshold. Specifically, the fourth circuit 4400 may be activated in response to an alarm signal generated by the liquid level controller 4127 when a low liquid level is detected, and may become inactive when the liquid level reaches the predetermined threshold. Further, the fourth circuit 4400 may also be alert to the temperature of the first fluid as detected by the refrigerant liquid receiver 4128. For instance, the fourth circuit 4400 may become active when the temperature of the first fluid exceeds a predetermined threshold, and become inactive when the temperature drops to or below the predetermined threshold.

[00155] The second circuit 4200 removes heat from the fourth circuit 4400 at the sub-cooler condenser 1300a. In some embodiments, the second circuit 4200 includes a splitter tee 4205 on the fluid path 4200d. The splitter tee 4205 includes a split path 4200b that diverts a small portion of the second fluid, approximately 5 gpm to an inlet of the sub-cooler condenser 1300a where the small portion of the second fluid extracts heat from the fourth circuit 4400. The remaining, undiverted portion of the second fluid follows the fluid path 4200d to the main condenser 1300 to remove heat from the first circuit 4100.

[00156] The second circuit 4200 may also include another splitter tee 4215 on the fluid path 4200e. The splitter tee 4215 has a split branch 4200c that carries the small portion of the second fluid returned from an outlet of the sub-cooler condenser 1300a to the fluid path 4200e to join the rest of the second fluid proceeding towards the exit of the second circuit 4200. In one embodiment, the temperature of the second fluid at the splitter tee 4215 is approximately 26.4°C when the fourth circuit 4400 is active, i.e., when the sub-cooler condenser 1300a is on, and approximately 26.7 °C when the fourth circuit 4400 is inactive, i.e., when the sub-cooler condenser 1300a is off.

[00157] The close-coupled cooling system 4000 may be installed in an auxiliary enclosure of a modular data pod and may provide chillerless cooling within a data enclosure of the modular data pod in high wet bulb temperature applications. For example, the dedicated close-coupled cooling systems 525, 626, 727, 828, 1020, and 828' of FIGS. 2A-2D and 2F-2G, respectively, may include the close-coupled cooling system 4000 of FIG. 6

[00158] The cooling system 4000 has many significant advantages over traditional cooling systems, such as chilled water systems, chiller plants or direct expansion cooling systems. First, the cooling system 4000 requires far less mechanical-assisted cooling infrastructure than traditional cooling systems. The cooling system 4000 increases its use of mechanical-assisted cooling infrastructure only when necessary. Specifically, the cooling system 4000 has two basic circuits, i.e., the first circuit 4100 and the second circuit 4200, which run constantly, and two backup circuits, i.e., the third circuit 4300 and the fourth circuit 4400, which run only when necessary. Specifically, the third circuit 4300 is active only when the wet bulb temperature is above the threshold temperature, and the fourth circuit 4400 is active only when the first fluid liquid level is low or the first fluid temperature is above a certain threshold. Since the two backup circuits operate only when necessary, e.g., approximately 10-20% of the operating time, the cooling system 4000 overall relies on less mechanical-assisted cooling infrastructure than the traditional cooling system.

[00159] Second, the cooling system 4000 is less prone to failures than the traditional cooling system. Specifically, the cooling system 4000 completely avoids a full system swing over process that is common in the traditional cooling system. A full system swing over process switches between two systems by shutting down one system and starting up another, which typically happens when the traditional cooling system switches between a free cooling system and a mechanical cooling system. The full system swing over process is dangerous and prone to failures. The cooling system 4000, on the other hand, avoids the full system over process. In the cooling system 4000, the basic circuits and the backup circuits run independently, yet cooperating with each other. The basic circuits 4100 and 4200 run continuously regardless of the state of the backup circuits 4300 and 4400. The backup circuits 4300 and 4400 are turned on only when necessary. Accordingly, the cooling system 4000 avoids the failures in the full system swing over process, and is a safer approach than the traditional cooling system.

[00160] Third, the close system 4000 has a higher tolerance for high wet bulb temperatures than the traditional cooling system. The traditional cooling system generally has a very high operation cost when the wet bulb temperature is above 10°C. For instance, the maximum wet bulb temperature that the traditional cooling system can survive in a free cooling mode is approximately 10°C. When the wet bulb temperature exceeds 10°C, the traditional cooling system must switch from a free cooling system to a mechanical cooling system to provide sufficient cooling to an IT data center. For about every half degree above 10°C, the mechanical cooling system has to generate an additional cooling capacity of 91 tons, which demands the traditional cooling system to acquire sufficient power to generate the additional cooling capacity. On the other hand, the cooling system 4000 of the present disclosure has a better tolerance for high wet bulb temperatures. The maximum wet bulb temperature that the cooling system 4000 can survive in a free cooling mode is approximately 17.2°C, much higher than that of the traditional cooling system. Once the wet bulb temperature exceeds 17.2°C, the cooling system 4000 switches to the mechanical compressed cooling mode. For every half degree above 17.2°C, the mechanical compressed cooling mode generates an additional cooling capacity of 13 tons, which, in turn, consumes significantly less power than the traditional cooling system. Because of its high tolerance for high wet bulb temperature, the cooling system 4000 is better suited for a high density IT data center, e.g., 40 kW per rack, than the traditional cooling system.

[00161] Fourth, the cooling system 4000 is more energy efficient than the traditional cooling system. The cooling system 4000 maximizes energy savings by having the simple free cooling mode which relies on atmosphere to assist cooling the IT data center. In the simple free cooling mode, the cooling system 4000 consumes a limited of power, which, for instance, is 15% less than what is required to power the traditional cooling system. Further, the cooling system 4000 adjusts its power consumption dynamically as a function of the load in the IT data center. As the load increases, the cooling system 4000 increases its power consumption level to cause an increase in the flow rates in the two basic circuits and/or activate one or both of the backup circuits, which, in turn, generate more cooling capacity to compensate for the load increase. By contrast, as the load decreases, the cooling system 4000 decreases its power consumption level which, in turn, reduces its output of cooling capacity.

[00162] Fifth, the cooling system 4000 is more scalable to the size of the IT data center and easier deployable than the typical cooling system. For instance, the cooling system 4000 can be deployed modularly at specific, targeted locations in a IT data center, in contrast to the typical cooling system which has to be deployed as a whole covering the full extent of the IT data center. Due to its modularity, the cooling system 4000 targets specific locations in the IT data center and avoids locations that do not need cooling. Also due to its modularity, the cooling system 4000 can be deployed on existing and retrofit cooling systems which the typical cooling system fails to do. Further, the number of cooling systems 4000 deployed in an IT data center may be scaled according to the dynamic change, e.g., shrink or growth, of the IT data center.

[00163] Lastly, the cooling system 4000 has a lower overall cost than that of the traditional cooling system. For instance, the cooling system 4000 requires a relatively low initial capital and maintenance. Further, due to its energy efficiency, the cooling system 4000 has a low operation cost. As a result, the cooling system 4000 is more cost effective than the traditional cooling system. Because of its overall low cost, in addition to its high tolerance for high wet bulb temperature, the cooling system 4000 is an optimal cooling choice for the high density IT data center, e.g., 40 kW per rack.

[00164] Thus, a control strategy is employed to enable close system pressure and flow tolerances utilizing bypass control valves, temperature and pressure sensors, and receiver safeties and pressure regulators. This control strategy is real time and relational with dynamic control of all components. The control strategy incorporates feed back from the IT servers, in order to better facilitate close coupled cooling based on real time individual loading of the rack servers and computer loads.

[00165] One of the benefits of the dedicated close-coupled cooling systems (e.g., 525) is that they can adapt to the different heat loads that are generated by different servers contained in the modular data pods. As a result, the dedicated close-coupled cooling systems can operate efficiently. In contrast, traditional cooling systems for data centers and data pod modules are typically designed for and operates at the worst case conditions for a particular computer design. Also, traditional cooling systems cool all data pod modules according to the data module with the greatest heat load.

[00166] FIG. 7 is a schematic diagram of a dedicated close-coupled hybrid refrigerant-cooled and water-cooled cooling system for modular data pods. In the exemplary embodiment of FIG. 7, cooling system 2000 is illustrated as being applied to modular data pod 50 of FIG. 2A. Cooling system includes three independent and individually-pumped refrigerant cooling coil circuits. The dedicated close-coupled cooling system 525 for chillerless operation is housed within an auxiliary enclosure or compartment 515, as described above with respect to FIG. 2A. The dedicated close-coupled cooling system 525 includes three sub-cooling circuits 2011, 2012 and 2013. Sub-cooling circuits 2011, 2012 and 2013 are each similar to the cooling system 4000 of FIG. 6. The sub-cooling circuits 2011, 2012 and 2013 each include the first cooling circuit 2100, the second cooling circuit 2200, and the third cooling circuit 2300, respectively. As described above with respect to FIG. 6, if the wet bulb temperature is at or exceeds a predetermined wet bulb temperature limit, the second fluid circuit 2200 is placed into operation to sub-cool the first fluid flowing through the first cooling circuit 2100. Operation of the second fluid circuit 2200 includes operation of the one or more compressors 2220 and the sub-cooler condenser 1200a and evaporative sub-cooler 1200b and the refrigerant fluid receiver 2130 that is designed to provide stable liquid levels at the inlet to one or more pumps 2120.

[00167] First circuit 2011 includes primary cooling vertical coils 531 to 535, adjacent to rear sides 501a through 505a of server racks 501 to 505, respectively. Primary vertical coils 531 to 535 are in fluidic communication with refrigerant gas fluid supply path 2100a via first refrigerant cooling gas supply connection header 2101a. The refrigerant gas passes through the primary vertical coils 531 to 535 to cool the server racks 501 to 505, respectively. The refrigerant gas is then discharged to refrigerant cooling gas return connection header 2101b that is in fluidic communication with the electronic equipment and fluid return path 2100b described above with respect to FIG. 5.

[00168] Second circuit 2012 includes (N+1) secondary cooling vertical coils 21 and 22 as described above with respect to modular data pod 10 in FIG. 3 plus additional (N+1) vertical cooling coils 23, 24 and 25 that are not explicitly illustrated in FIG. 3. Secondary vertical coils 21 to 25 are in fluidic communication with refrigerant gas fluid supply path 2100a via first refrigerant cooling gas supply connection header 2102a. The refrigerant gas passes through the secondary vertical coils 21 to 25, whjch are generally positioned in proximity to server racks 501 to 505 to cool the server racks 501 to 505, respectively. The refrigerant gas is then discharged to refrigerant cooling gas return connection header 2102b that is in fluidic communication with the electronic equipment and fluid return path 2100b described above with respect to FIG. 5.

[00169] Similarly, third circuit 2013 includes one or more (N+2) cooling coils, such as third cooling coil 30 that is disposed on the suction sides of the air circulators 16a, 16b, 16c for further cooling of the air circulating through the air circulators 16a, 16b, 16c, as described above with respect to FIG. 3. In a similar manner, third cooling coil 30 is in fluidic communication with refrigerant gas fluid supply path 2100a via first refrigerant cooling gas supply connection header 2103a. The refrigerant gas passes through the third cooling coil 30 that is generally positioned above server racks 501 to 505 to cool the server racks 501 to 505, respectively. The refrigerant gas is then discharged to refrigerant cooling gas return connection header 2103b that is in fluidic communication with the electronic equipment and fluid return path 2100b described above with respect to FIG. 5.

[00170] In general, in the initial configuration, first cooling circuit 2011 is in fluidic communication with the primary vertical cooling coils 531 to 535 and to cooling water supply header 2152a via primary cooling coil cooling water supply connection 2311a which is in fluidic communication with first low temperature supply path 2310a and via primary cooling coil cooling water return connection 2311b which is in fluidic communication with first high temperature return path 2310b. Primary cooling coil cooling water return connection 2311b is in fluidic communication with cooling water return header 2151b. The cooling water supply header 2152a may also be in fluidic communication with a second cooling water supply header 2151a. Similarly, cooling water return header 2151b may also be in fluidic communication with a second cooling water return header 2152b.

[00171] As the heat load within the modular data pod 50 increases, secondary (N+1) vertical cooling coils 21 to 25 can be installed and second cooling circuit 2012 is connected to the secondary vertical cooling coils 21 to 25 and to cooling water supply header 2152a via second cooling coil cooling water supply connection 2312a which is in fluidic communication with first low temperature supply path 2310a and via second cooling coil cooling water return connection 2312b which is in fluidic communication with first high temperature return path 2310b. Second cooling coil cooling water return connection 2312b is in fluidic communication with cooling water return header 2151b.

[00172] As the heat load within the modular data pod 50 further increases, the one or more third (N+2) cooling coils 30 can be installed and third cooling circuit 2013 is connected to the one or more third cooling coils 30 and to cooling water supply header 2152a via third cooling coil cooling water supply connection 2313a which is in fluidic communication with first low temperature supply path 2310a and via third cooling coil cooling water return connection 2313b which is in fluidic communication with first high temperature return path 2310b. Third cooling coil cooling water return connection 2313b is in fluidic communication with cooling water return header 2151b.

[00173] Detail 7A in FIG. 7 illustrates that supply header 2151a can be physcially installed with a loop or pipe bend 2151'a to provide a longer total length as compared to the alternate supply header 2152a for the purposes of providing reverse return capability.

[00174] Similarly, return header 2151b can be physically installed with a loop or pipe bend 2151b' to provide a longer total length as compared to the alternate return header 2152b for the purposes of providing reverse return capability.

[00175] Thus, the first, second and third cooling circuits 2011, 2012, 2013, respectively, can be installed and operated in a staged or as-needed manner, in a single, individual modular data pod, depending upon the heat load. When the second and third cooling systems 2012 and 2013 are not used, all or a portion of the fourth fluid in the fluid receiver 4128 may change to the vapor state and impact.

[00176] The three refrigerant cooling coil circuits 2011, 2012 and 2013 may use R-134a (i.e., 1,1,1,2-Tetrafluoroethane) refrigerant. In other embodiments, one or more of the circuits may use other refrigerants known to those skilled in the art. Each circuit has its own pump 2120. Each circuit may also include a secondary or redundant pump.

[00177] FIG. 7 also shows water-cooled condensers 1300. In other embodiments, the cooling system can use air-cooled condensers or other types of condensers. Each condenser circuit includes energy-efficient controls to maintain, optimize, and manage the refrigerant and cooling water circuits. The cold-water side of the cooling system can use any medium for rejecting heat, e.g., air-cooled systems, cooling towers, fluid coolers, glycol water-cooled system, and geothermal systems.

[00178] The control and regulation of the refrigerant temperature is managed by water-regulating valves that regulate the temperature of the liquid refrigerant based on a given set point. The cooling system includes control logic that monitors the interior conditions of the modular data pods and regulates the cooling system output based on the internal temperature and specific rack-loading requirements. The de-ionized water or refrigerant circuits may each include redundant pumps. The pumps are driven VFDs and are controlled according to various control strategies. The control strategies may incorporate demand loading at the server and rack locations according to cloud-computing technology.

[00179] FIG. 8 is a schematic diagram of an exemplary embodiment of a dedicated close-coupled water-cooled cooling system 2400 as applied to modular data pod 50 showing the flow of cooling water, e.g., de-ionized (nonconductive) water. Water-cooled cooling system 2400 includes three independent and individually pumped de-ionized water cooling coil circuits 2401, 2402 and 2403 installed within auxiliary enclosure 515 of modular data pod 50. The circuits of FIG. 8 are similar to the circuits of FIG. 6 except that the dedicated close-coupled cooling water system 2000 of FIG. 7 is now replaced in FIG. 8 by dedicated close-coupled cooling water system 2400 which includes heat exchangers and the cooling system 2400 of FIG. 8 further includes a de-ionized water source (not shown) in fluidic communication with a dedicated external chiller skid 2450 housed within the auxiliary enclosure 515. The dedicated external chiller skid 2450 is illustrated as including a first mechanical assist chiller 2451 and a redundant second mechanical assist chiller 2452. Each of the cooling coil circuits 2401, 2401 and 2403 includes a heat exchanger 2420 having a de-ionized water side 2420a and a cooling water side 2420b. On de-ionized water side 2420a, deionized water is discharged from the heat exchanger 2420 via a de-ionized cooling water supply line 2403a located within the auxiliary enclosure 515. Deionized cooling water supply line 2403a includes redundant pumps 2431 and 2432 having a common pump suction header 2430. Heated water returning from the modular data pod 50 is returned to the heat exchanger 2420 via deionized cooling water return line 2403b where heat is exchanged between the deionized water side 2420a of the heat exchanger 2420 and the cooling water side 2420b of the heat exchanger 2420.

[00180] The cooling water side 2420b of heat exchanger 2420 is in fluidic communication with cooling water supply header 2152a via a first cooling water supply line 2410a1. The cooling water side 2420b of heat exchanger 2420 is also in fluidic communication with cooling water return header 2151b via a first cooling water return line 2410b1. In a similar manner as described above with respect to FIG. 7, the cooling water supply header 2152a may also be in fluidic communication with a second cooling water supply header 2151a. Similarly, cooling water return header 2151b may also be in fluidic communication with a second cooling water return header 2152b.

[00181] The mechanical assist chillers 2451 and 2452 are in fluidic communication with the common pump suction header 2430 via a first de-ionized chilled water supply and return line 2461 that is in fluidic communication with an expansion tank 2460. The mechanical assist chillers 2451 and 2452 alternately draw de-ionized water from the expansion tank 2460 to remove heat during the cooling phase of operation of the mechanical assist chillers 2451 and 2452 and discharge the cooled de-ionized water back to the expansion tank 2460 and pump suction header 2430.

[00182] Those skilled in the art will recognize that although the deionized chilled water supply and return are illustrated as occurring in an alternating sequence via first chilled water supply and return line 2461, the deionized chilled water supply and return can also be effected via separate supply and return lines between the mechanical assist chillers 2451 and 2452 and the common pump suction header 2430. In that case, the mechanical assist chiller skid 2450 includes separate pumping capability (not shown) and separate supply and return lines (not shown) to and from the pump suction header 2430 for a continuous cooling mode of operation.

[00183] As described above with respect to the close-coupled cooling system 2000 of FIG. 5, the de-ionized cooling water supply line 2403a of the first cooling circuit 2401 is in fluidic communication with the first supply connection header 2101a that generally extends into the modular data pod 50 and is in fluidic communication with primary cooling coils 531 to 535. Instead of transporting refrigerant gas, the first supply connection header 2101a now transports de-ionized water through the primary cooling coils 531 to 535 which in turn discharges the now heated de-ionized water to first return connection header 2101b that is in fluidic communication with deionized cooling water return line 2403b.

[00184] As described above, de-ionized cooling water return line 2403b transports heat to the deionized water side 2420a of the heat exchanger 2420. The flow of cooling water on the cooling water side 2420b of the heat exchanger 2420 is controlled by a temperature or flow control valve that is actuated dependent upon the temperature in the de-ionized cooling water supply line 2403a of the first cooling circuit 2401.

[00185] Similarly, the de-ionized cooling water supply line 2403a of the second cooling circuit 2402 is in fluidic communication with the second supply connection header 2102a that generally extends into the modular data pod 50 and is in fluidic communication with secondary cooling coils 21 to 25. Again, instead of transporting refrigerant gas, the second supply connection header 2102a now transports de-ionized water through the second cooling coils 21 to 25 which in turn discharges the now heated de-ionized water to second return connection header 2102b that is in fluidic communication with deionized cooling water return line 2403b. Again, de-ionized cooling water return line 2403b transports heat to the deionized water side 2420a of the heat exchanger 2420.

[00186] Also, the de-ionized cooling water supply line 2403a of the third cooling circuit 2403 is in fluidic communication with the third supply connection header 2103a that generally extends into the modular data pod 50 and is in fluidic communication with one or more third cooling coils 30. Again, instead of transporting refrigerant gas, the third supply connection header 2103a now transports de-ionized water through the one or more third cooling coils 30 which in turn discharges the now heated de-ionized water to third return connection header 2103b that is in fluidic communication with deionized cooling water return line 2403b. Again, de-ionized cooling water return line 2403b transports heat to the deionized water side 2420a of the heat exchanger 2420.

[00187] In a similar manner as described above with respect to FIG. 6, if the wet bulb temperature is at or exceeds a predetermined limit, one or both of the mechanical assist chillers 2451 and 2452 are placed into operation to sub-cool the de-ionized water flowing through one or more of the cooling circuit 2401, 2402 and 2403.

[00188] Thus, the first, second and third cooling circuits 2401, 2401 and 2403 respectively, can be installed and operated in a staged or as-required manner, in a single, individual modular data pod, depending upon the heat load requirements at a particular time after initial installation of the one or more modular data pods.

[00189] The heat rejection can also be accomplished using air-cooled condensers or other types of condensers. The cold water side 2420b of the system can include any medium for rejecting heat, e.g., air cooled, cooling towers, fluid coolers, glycol water, and geo thermal. The circuits can have redundant pumps. The control and regulation of the de-ionized water loop temperature is managed by the control of regulating valves located on the cold side of the heat exchangers. The regulating valves 2415 are opened and closed based on a predetermined set point. The system includes control logic that monitors the interior conditions of the modular data pods and regulates the cooling system output based on internal temperature and specific rack-loading requirements. Portable de-ionized water and expansion tanks are used to provide water to the cooling system as needed.

[00190] Thus, the data pods can use either de-ionized water or refrigerant cooling coils. Each set of coils have individual circuits that can be used in tandem (to meet high demands) or as redundant back-up circuits. For example, the data pods can use a primary set of coils for typical conditions and one or more supplemental sets of coils for other conditions.

[00191] FIGS. 9-11 illustrate a modular data pod 80" which is similar to the generic modular data pod 10 of FIG. 3 with a few differences. As compared to the generic modular data pod 10 described above with respect to FIG. 3, the modular data pod 80" as illustrated in FIG. 9 includes an additional “A-Frame” cooling circuit 2601. In one embodiment, the “A-Frame” cooling circuit 2601 contains a coolant supplied from a first cooling cycle skid 3001 as discussed below with respect to FIGS. 12 and 13. The “A-Frame” cooling circuit 2601 has an “A-Frame” heat exchanger assembly 3400, which is formed partially of cooling coils 3401a-c and 3502a-c, illustrated in FIG. 10, in conjunction with an air circulator support structure 816 illustrated in FIG. 9.

[00192] With reference to FIG. 9, the air circulator support structure 816 includes air circulators 816a, 816b and 816c that are configured and disposed in a manner to induce air circulation in the following direction. Cold air in the cold aisle 8002' flows downwardly from the top of each server rack 803a’ or 807c’ to the bottom of the server rack. After the air passes through a server, e.g., 813a’ on a server rack, e.g. 803a’, the air passes across a heat exchanger 3214a, and then enters a hot aisle 8001' located between the server rack, e.g. 803a’, and an external wall member 1083'. Subsequently, the air circulates upwardly into a third volume 8003' to complete one circulation cycle. The air then recirculates through the “A-Frame” heat exchanger assembly 3400 in the same order described above.

[00193] The modular data pod 80" is supported on a support structure 8000' which includes fluid supply paths 2701a and 2702a which is part of the first fluid circuit 2071 and fluid return paths 2702a and 2702b which is part of the second fluid circuit 2702 as explained below with respect to FIGS. 12 and 13.

[00194] The modular data pod 80" also includes cable trays 340 that are exemplarily mounted above the server racks, e.g., 803a’ and 807c’. In one embodiment, the modular data pod 80” includes a dedicated electrical power supply, e.g. one or more batteries 832 located at a lower end 811' of the data pod enclosure 108".

[00195] As seen in FIG. 9, the external wall members 1083' and 1087' define an aperture 812' at an upper end 811 of the enclosure 108". A data pod covering member 812 is configured and disposed in a manner to substantially cover the aperture 812'.

[00196] FIG. 10 is an upper plan view of the modular data center pod 80". The modular data pod 80" is almost identical to the modular data center pod 80' of FIG. 2G, except that the modular data center pod 80" includes a lesser amount of server racks along each external wall member 1081'-1088'. For instance, the elongated external wall member 1083' includes server racks 803a'-c', and the second end 88'b includes two server racks 804' and 806'. The server racks may be arranged in a "U"-shape as illustrated in FIG. 10, or other shapes.

[00197] Modular data pod 80" also includes first heat exchangers 3101a-d mounted above server racks 803a', 803b', 803c' and 804', respectively. Modular data pod 80" also includes second heat exchangers 3102a-d mounted above server racks 807c', 807b', 807a' and 806', respectively.

[00198] FIG. 11 is a lower plan view of the modular data center pod 80" illustrating air circulators 816a and 816b disposed below central aisle 850 of the modular data center pod 80" and configured to force air flow vertically upwards through a sump 852. The cable trays 340 exhibit a generally "U-shaped" configuration above the server racks 803a'-c', 804', 806' and 807a'-c'.

[00199] In one embodiment, as illustrated in FIGS. 12-13, the modular data center pod 80" may include two "A-Frame" cooling circuits 2601, 2602. For clarity, odd-numbered reference numerals refer to components included in the first cooling circuit 2601 and even-numbered reference numerals refer to components included in the second cooling circuit 2602. Installation and operation of the cooling circuits 2601 and 2602 need not take place concurrently.

[00200] The two cooling circuits 2601, 2602 receive coolants supplied from a first cooling cycle skid 3001 and a second cooling cycle skid 3002, respectively.

[00201] As shown in FIG. 13, each cooling circuit 2601, 2602 includes a first fluid circuit 2701, 2702, respectively. The first fluid circuits 2701 and 2702 are evaporator circuits that utilize R134a or a similar refrigerant and, in one embodiment, are in thermal fluidic communication with the various heat exchangers of the data center assembly 10 or 10'.

[00202] Returning to FIG. 12, each of the first fluid circuits 2701, 2702 includes a fluid supply path 2701a, 2702a and a fluid return path 2701b, 2702b, both of which are in fluid communication with heat exchangers, e.g. 3101a-n, by carrying fluid or refrigerant to and from the heat exchangers. The heat exchangers, e.g., 3101a-n, are placed in close proximity to IT servers or IT racks in the IT data center for providing close coupled cooling at the point of load.

[00203] The first fluid supply path 2701a includes a first branch path 2702a1 which carries coolant or cooling fluid to the first heat exchangers 3101a-n via sub branches 2703a-n and to the second heat exchangers 3102a-n via sub branches 2704a-n. The first fluid return path 2701b carries coolant from the first heat exchangers 3101a-n via sub branches 2705a-n back to the first cooling circuit 2601, and carries coolant from the second heat exchangers 3102a-n via sub branches 2706a-n.

[00204] In one embodiment, the first fluid supply path 2701a includes a second branch path 2702a2 that supplies coolant to fourth heat exchangers 3401a-n via sub branches 2775a-n, and then to fifth heat exchangers 3502a-n. The coolant exits the fifth heat exchangers 3502a-n via sub branches 2776a-n to the first fluid return path 2701b via a branch path 2701b2. The coolant removes heat from the fourth and fifth heat exchangers and is converted to a heated fluid as a result.

[00205] It is envisioned that the second fluid paths 2702a-b have similar structures and functionalities as that of the first fluid paths 2701a-b to cool heat exchangers 3301a-n, 3213a-n and 3214a-n.

[00206] As the coolant leaves each heat exchanger, the coolant absorbs heat from the heat exchanger and becomes heated fluid, which is then delivered to the inlet of the main condenser 1300 illustrated in FIG. 13 for cooling.

[00207] As shown in FIG. 13, the first cooling circuit 2601 includes a cooling system similar to the cooling system 10 of FIG. 6. The first fluid supply path 2701a and the first fluid return path 2701b of the first cooling circuit 2601 are respectively coupled to the first supply path 4100a and the first return path 4100b of the first circuit 100 of the cooling system. In operation, the first fluid return path 2701b carries the heated fluid to the first return path 4100b, which delivers the heated fluid to the main condenser 1300 where the heated fluid is cooled and condensed. For purposes of cooling the heated fluid, the main condenser 1300 may be assisted by the second circuit 4200 and the third circuit 4300.

[00208] After the fluid exits from the main condenser 1300, the fluid flows to the refrigerant liquid receiver 4128 where the liquid level and temperature of the fluid is measured. If the liquid level is low or if the temperature is high, the sub cooler compressor 4410 and the sub cooler condenser 1300a are activated to increase the liquid level and/or reduce the temperature of the fluid. After the fluid exits from the refrigerant liquid receiver 4128, the fluid flows to the liquid refrigerant pump 4120 which pumps the fluid, now the coolant, to the fluid supply path 4100a which then delivers the coolant to the first fluid supply path 2701a. The coolant would then be reused to cool the heat exchangers, e.g., 3101a-n.

[00209] For extremely high density applications (e.g., greater than 25 kW per rack), a dual coil (in series) circuit can be utilized. The secondary coil (micro channel) receives the coldest refrigerant liquid first. This coil receives inlet air temperatures approximately 10° F below the inlet temperature to the primary coil (immediately adjacent to the IT racks). The liquid and partial vapor leaving the micro channel then enters a simple serpentine single row evaporator coil. This serpentine coil is closest to the IT rack. Therefore the serpentine coil receives the hottest air (approx 105° F). The remaining liquid can be boiled off in serpentine coil thereby utilizing the full heat rejection benefits of latent heat of vaporization principles. There are no thermal expansion valves or other pressure metering devices ahead of the coils.

[00210] FIG. 14 is a schematic diagram of a water-cooled cooling system 3000 for a modular data pod, e.g., modular data pods 10, 50, 60, 70, 80, 90, 100 and 80' of FIGS. 2A-2G and 3-13. In this embodiment, cooling towers CT-1A, CT-1B, CT-2A and CT-2B provide the heat rejection to the environment for the cooling system 3000. In other embodiments, however, other heat transferring equipment can be used, such as other fluid coolers and dry coolers. The cooling system also includes dual redundant pipe mains and equipment (pumps and cooling towers).

[00211] More particularly, cooled water from cooling towers CT-1A, CT-1B, CT-2A and CT-2B discharges into a common cooling water supply header 3101. Fully redundant or alternatively half-capacity pumps 3102a and 3102 are in fluidic communication with the cooling towers CT-1A, CT-1B, CT-2A and CT-2B via the supply header 3101 and separate cooling water supply header branch lines 3101a and 3101b such that pump 3102a draws suction via branch line 3101a and pump 3102b draws suction via branch line 3101b.

[00212] The cooling system 3000 includes a reverse-return pipe circuit on the main pipes and the branch pipes, which connect the modular data pods to the main pipes. More particularly, in one embodiment of the present disclosure, a first modular data pod cooling water supply branch line 3103a is in fluid communication with cooling water supply header branch line 3101a to supply cooling water to one or more modular data pods 80. Similarly, a second modular data pod cooling water supply branch line 3103b is in fluid communication with cooling water supply header branch line 3101b to supply cooling water to one or more modular data pods 80.

[00213] Cooling water is supplied to one or more modular data pods 80 via a section of the first and second cooling water supply branch lines 3103a and 3103b, respectively, that pass through the auxiliary enclosure 818 of modular data pod 80.

[00214] The first and second modular data pod cooling water supply branch lines 3103a and 3103b, respectively, are configured and disposed in a "U-shaped" configuration to provide reverse return capability to the cooling water system 3000.

[00215] The cooling water that has passed through the auxiliary enclosure 818 and has been heated by the equipment in the one or more modular data pods 80 is returned to the cooling towers CT-1A, CT-1B, CT-2A and CT-2B via a section of first and second modular data pod cooling return branch lines 3113a and 3113b, respectively. The first and second modular data pod cooling return branch lines 3113a and 3113b, respectively, are in fluidic communication with a common cooling tower water return header 3111 and the cooling towers CT-1A, CT-1B, CT-2A and CT-2B via separate cooling water return header branch lines 3111a and 3111b, respectively.

[00216] Similarly, cooling water is supplied to one or more modular data pods 80 via a section of first and second modular data pod cooling water supply branch lines 3105a and 3105b, respectively, that pass through the auxiliary enclosure 818 of another modular data pod 80.

[00217] The first and second modular data pod cooling water supply branch lines 3105a and 3105b, respectively, are also configured and disposed in a "U-shaped" configuration to provide reverse return capability to the cooling water system 3000.

[00218] Again, the cooling water that has passed through the auxiliary enclosure 818 and has been heated by the equipment in the one or more modular data pods 80 is returned to the cooling towers CT-1A, CT-1B, CT-2A and CT-2B via a section of the first and second modular data pod cooling return branch lines 3115a and 3115b, respectively. The first and second modular data pod cooling return branch lines 3115a and 3115b, respectively, are also in fluidic communication with the common cooling tower water return header 3111 and the cooling towers CT-1A, CT-

1B, CT-2A and CT-2B via the separate cooling water return header branch lines 3111a and 3111b, respectively.

[00219] In one embodiment, as the need for additional modular data pods increases, first and second modular data pod cooling water supply branch lines 3103a and 3103b, respectively, that pass through the auxiliary enclosure 818 of modular data pod 80, can be extended as first and second modular data pod cooling water supply branch lines 3103a' and 3103b', respectively, to allow for the addition of one or more additional modular data pods 80.

[00220] The first and second modular data pod cooling water supply branch line extensions 3103a' and 3103b', respectively, are configured and disposed in a "U-shaped" configuration to provide reverse return capability to the cooling water system 3000.

[00221] Similarly, the first and second modular data pod cooling return branch lines 3113a and 3113b, respectively, can also be extended as first and second modular data return cooling water branch line extensions 3113a' and 3113b', respectively, to allow for the addition of one or more additional modular data pods 80.

[00222] Those skilled in the art will recognize that first and second modular data pod cooling water supply branch lines 3105a and 3105b, respectively, and first and second modular data pod cooling water return branch lines 3115a and 3115b, respectively, can also be extended in a similar manner as first and second modular data pod cooling water supply branch line extensions 3105a' and 3105b' and first and second modular data pod cooling water return branch line extensions 3115a' and 3115b', respectively, to allow for the addition of one or more modular data pods 80.

[00223] The first and second modular data pod cooling water supply branch lines 3105a and 3105b, respectively, can also be configured and disposed in a "U-shaped" configuration to provide reverse return capability to the cooling water system 3000.

[00224] As can be appreciated from the foregoing discussion with respect to the reverse return capability, the total path length of the pipe circuit that connects a modular data pod to the cooling towers is the same for each modular data pod. This reverse-return feature allows modular data pods to be added to or subtracted from the cooling system without requiring a system shut down of adjacent pods on the circuit or affecting the operation of adjacent modular data pods. Indeed, this feature enables a data site the flexibility of adding and subtracting modular data pods at will without affecting the overall operation of the cooling system.

[00225] The reverse-return feature coupled with the modular capabilities of the modular data pod design according to embodiments of the present disclosure allows for the addition, removal, and restacking of modular data pods with relative ease. Thus, a modular data pod can be installed in a "just in time" manner. Also, the modular data pods require less upfront infrastructure work and thus lower costs than a typical data center having phased loading over time.

[00226] FIG. 15 is a schematic diagram of a cooling system 3000' for low wet bulb environments where high wet bulb conditions may occasionally occur. Cooling system 3000' is identical to cooling system 3000 described above with respect to FIG. 14 except that cooling system 3000 further includes a modular chiller 3150 The cooling system 3000' includes the one or more cooling towers CT-1A, CT-1B, CT-2A or CT-2B or other fluid cooler that are effective for low wet bulb conditions and modular chiller 3150 that is effective for high wet bulb conditions.

[00227] More particularly, modular chiller 3150 provides a bypass around the one or more cooling towers CT-1A, CT-1B, CT-2A and CT-2B since the modular chiller 3150 is in fluidic communication with separate first and second cooling water return header branch lines 3111a and 3111b, respectively, via first and second modular chiller suction lines 3131a and 3131b, respectively, and with separate first and second cooling water supply header branch lines 3101a and 3101b, respectively, via first and second modular chiller discharge lines 3121a and 3121b, respectively.

[00228] Under high wet bulb conditions, the modular chiller 3150 is placed into operation to provide external mechanical assist cooling to one or more of the modular data pods 80 by supplementally injecting cooler water into first and second cooling water supply header branch lines 3101a and 3101b, respectively.

[00229] Cooling system 3000' could be coupled to a modular data pod hive so that the cooling system could operate with little or no need for a separate chiller to cool the water or other cooling fluid.

[00230] FIG. 16 is a schematic diagram of a portion of a water-cooled cooling system 3110 that includes an existing water-cooled cooling system to which modular data pods, e.g., modular data pods 80, are coupled. The modular data pods 80 may be designed to be fed from all kinds of water-cooled and refrigerant-cooled cooling systems. The modular data pod structures 80 may be designed to operate on new or existing condenser water, glycol, geothermal, waste water, or refrigerant cooling systems.

[00231] As shown in FIG. 16, the piping from the modular data pods 80 is coupled to an existing chilled water circuit. In particular, the existing chiller water circuit includes a supply header 3201 and a return header 3202. The piping from the data pods may be coupled to the "warmer" or "spent side" of the chilled water circuit on the chilled water return because the modular data pods use cooling air temperatures that are higher than typical comfort cooling systems. More particularly, water-cooled cooling system 3110 includes a heat exchanger 3161 having a chilled water side 3161a and a modular data pod side 3161b. The chilled water side 3161a is in fluidic communication with existing chilled water return header 3202 via heat exchanger 3161 chilled water supply line 3160. The "spent side" water from the chilled water return header 3202 flows through the inlet of chilled water side 3161a of the heat exchanger 3161 via one or more chilled water circulation pumps, e.g., pumps 3162A and 3162B. The outlet of chilled water side 3161a of the heat exchanger 3161, in which the water is now at an elevated temperature as compared to the water at the inlet of the chilled water side 3161a of the heat exchanger 3161, is also in fluidic communication with the chilled water return header 3202 via the pumps 3162A and 3162B and heat exchanger 3161 chilled water return line 3163.

[00232] The modular data pod side 3161b is in fluidic communication with one or more modular data pods 80 via a modular data pod chilled water supply header 3165. The modular data pod chilled water supply header 3165 is in fluidic communication with the modular data pod side 3161b of the heat exchanger 3161 via one or more modular data supply chilled water supply pumps, e.g., pumps 3164A and 3164B, such that water flows from the outlet of the modular data supply side 3161b of the heat exchanger 3161 to the modular data pod chilled water supply header 3165. One or more modular data pods 80 are in fluidic communication with a section of modular data pod chilled water supply header branch line 3166 which passes through the auxiliary enclosure 818 of modular data pod 80.

[00233] The cooling water that has passed through the auxiliary enclosure 818 and has been heated by the equipment in the one or more modular data pods 80 is returned to the existing chilled water return header 3202 via a section of modular data pod cooling return branch line 3167. The modular data pod cooling return branch line 3167 is in fluidic communication the inlet to modular data pod side 3161b of heat exchanger 3161 via a common heat exchanger modular data supply side header 3170.

[00234] Similarly, cooling water is supplied to one or more modular data pods 80 via a section of modular data pod cooling water supply branch line 3168 that passes through the auxiliary enclosure 818 of another modular data pod 80.

[00235] Again, the cooling water that has passed through the auxiliary enclosure 818 and has been heated by the equipment in the one or more modular data pods 80 is returned to the inlet of the modular data pod side 3161b of heat exchanger 3161 via a section of modular data pod cooling return branch line 3169. The modular data pod cooling return branch line 3168 is also in fluidic communication with the inlet of the modular data pod side 3161b of heat exchanger 3161 via the common heat exchanger modular data supply side header 3170.

[00236] The modular data pod cooling water supply branch lines 3168 and 3168 may also be configured and disposed in a "U-shaped" configuration to provide reverse return capability to the cooling water system 3110.

[00237] The modular data pods can also be fed with chilled water that has been used for other cooling purposes and is in transit back to the cooling manufacturing equipment (i.e., the chillers). The data pods may operate at extremely high efficiency levels, and the control system can be modified to incorporate and take full advantage of system optimization strategies. These strategies not only reduce the cost of data pod energy use, but also reduce the operating costs of the existing chilled-water plant.

[00238] As can be appreciated from the foregoing, referring again to FIGS. 2A -2G, in one embodiment, the present disclosure relates to a modular data pod, e.g., modular data pod 105 in FIG. 1A, modular data pod 106 in FIG. 1B, comprising: an enclosure including wall members contiguously joined to one another along at least one edge of each wall member in the shape of a polygon and a data pod covering member; a plurality of computer racks arranged within the enclosure to form a first volume between the inner surface of the wall members and first sides of the computer racks and a second volume formed of second sides of the computer racks; a computer rack covering member configured to enclose the second volume, the computer rack covering member and the data pod covering member forming a third volume coupling the first volume to the second volume; and an air circulator configured to continuously circulate air through the first, second, and third volumes.

[00239] The modular data pods 80 include significant adaptive, expandable, and retractable features that allow the data pods to be more easily deployed. FIG. 17 is a schematic diagram of a modular data pod hive 1700 illustrating staged expansion of the data pod farm. As shown, in an initial phase, a partial hive is deployed. The bolded data pods are data pods that are deployed in an initial phase with the base infrastructure, which includes pumps, electrical components, and cooling towers. After this initial deployment, more data pods and associated support system infrastructure may be added. Also, more cooling towers, pumps, and other equipment for the cooling system can be added as the load increases over time.

[00240] The physical infrastructure mains (i.e., pipe and electrical cable) are located on one side of the hive. This arrangement reduces the amount of pipe needed to support the hive. The actual branch mains (i.e., the pipe and electrical cable for a particular data pod) are included with each data pod thereby reducing the amount of support branch mains installed in the field and the cost of installing the support branch mains in the field. This also reduces costs significantly.

[00241] As shown in FIG. 17, a modular data pod 80 can be added to or removed from a data pod hive 1700 or a data pod chain 122, 124, and 126. In particular, each modular data pod 80 includes system components that allow modular data pods 80 to be added to the data pod hive 1700. Each modular data pod 80 includes an auxiliary enclosure 818 containing a fluid and electrical circuit section. The fluid and electrical circuit sections may includes segments of HVAC pipe and electrical conduits. The segments of the HVAC pipe and electrical conduits contained in each of the auxiliary enclosures 818 form a fluid and electrical link between the existing, the new, and the future modular data pods on the modular data pod chains 122, 124, and 126.

[00242] The auxiliary enclosures 818 and their HVAC pipe and electrical conduits facilitate staged expansion of a data center without disrupting the operation of previously deployed modular data pods and corresponding cooling infrastructure. For example, an initial deployment of the modular data center or the modular data pod hive 1700 of FIG. 17 may have a central cooling fluid circuit including a central cooling device such as a first pair of cooling towers 131a and 131b, supply lines 115a and 115b, return lines 125a and 125b, and a chain of modular data pods 122. Each modular data pod in the chain of modular data pods 122 includes an auxiliary enclosure 818 that contains a shared or common fluid and electrical circuit section. Each modular data pod 80 in the chain of modular data pods 122 also includes a data enclosure 85 that contains at least a portion of an unshared fluid and electrical circuit that couples to the shared fluid and electrical circuit section. The unshared fluid and electrical circuit includes a cooling fluid circuit that is configured to cool the electronics contained within the corresponding data enclosure. The shared fluid and electrical circuit sections are coupled together in series to form a shared fluid and electrical circuit 1705. The shared fluid and electrical circuit 1715 is coupled at a first end 1710 to the fluid supply lines 115a and 115b and the fluid return lines 125a and 125b of the central cooling fluid circuit.

[00243] The shared fluid and electrical circuit 1705 includes at least one supply line and at least one return line. The supply and return lines may be arranged in a reverse return configuration. For example, each of the shared fluid and electrical circuit sections contained within a corresponding auxiliary enclosure may include four supply line segments and two return line segments. The pipe chases within the auxiliary enclosures 818 of each modular data pod 80 include dual reverse-return pipe circuit segments to provide redundancy in case one of the pipe circuits fails. These circuits continue the reverse return capabilities of the cooling system as each new modular data pod is deployed on a modular data pod chain. This feature enables the addition or removal of modular data pods without shutdowns or costly water system balancing problems. In other embodiments, the modular data pods include direct feed mains (versus reverse-return mains) or single, non-redundant mains (e.g., the common cooling fluid circuit includes a single supply line and a single return line). These modular data pods can be used on tier 1 type facilities where self balancing, reliability, and redundancy issues are less critical.

[00244] The pair of cooling towers are fluidly coupled to the central cooling fluid circuit and are configured to support at least a portion of the cooling requirements of the first chain of modular data pods. In particular, the pair of cooling towers are configured to support all of the cooling requirements of the chain of modular data pods under favorable environmental conditions, e.g., a favorable ambient wet bulb temperature.

[00245] As described above, each modular data pod includes a data enclosure and an auxiliary enclosure 818. As shown in FIG. 17, the shared fluid and electrical circuit sections of the auxiliary enclosure are coupled together in series to form a linear path. The data enclosures are coupled to corresponding auxiliary enclosures on alternating sides of this linear path. The data enclosure can be shaped and sized so that adjacent data enclosures on the same side of the linear path form a pathway that allows a person to access the auxiliary enclosures. The data enclosures can take the shape of a polygon, such as a hexagon or an octagon. This arrangement of modular data pods provides a data center with a very small footprint as compared to traditional data centers. To further increase the data capacity per square foot, the modular data pods may be stacked on top of each other.

[00246] After the initial deployment, the modular data center may need additional data capacity. Thus, in a second stage, a second chain of modular data pods and a third chain of modular data pods may be coupled to the central cooling fluid circuit in a manner similar to the initial deployment of the modular data center ##. If the first pair of cooling towers do not have sufficient capacity to handle the cooling requirements of the additional chains of modular data pods ##, then a second central cooling device, such as a second pair of cooling towers ##, may be fluidly coupled to the central cooling fluid circuit in the second stage. In future deployment stages, additional modular data pods may be appended to the first and second chains ##. In this manner, the modular data center is seamlessly expanded over time. Also, as shown in FIG. 17, the central cooling fluid circuit includes supply and return lines in a reverse-return configuration.

[00247] FIG. 18 is a schematic diagram and plan view of a modular data pod hive illustrating a transport system for the modular data pods 80 according to some embodiments of the present disclosure.

[00248] As shown in FIG. 18, the modular data pods 80 may be designed to be removed from a modular data pod chain using a crane 1805 and placed on a drop-bed tractor trailer 1810 for transport to another location. The size of the modular data pods 80 may be scaled down to fit on smaller trucks and railroad flat beds. This scaled-down design decreases the total output power that the modular data pods can handle.

In indoor or outdoor environments or applications, the transport system may include overhead gantries, cranes, and rails. If sufficient overhead room for rigging is not available, the width of the corridors between chains of data pods can be increased. This allows fork lifts or other grade-level rigging apparatus to access the corridors so that the data pods can be easily removed or deployed.

[00249] FIG. 19 illustrates a modular data pod hive 1 in which certain data pods have been removed from the hive and transported off site so that the removed data pods can be restacked with new computer systems or servers. The auxiliary enclosure and the fluid and electrical circuit sections, including pipe and electrical chase chambers, remain in place to enable the data pod envelop or enclosure to be removed, while leaving the pipe and electrical system infrastructure intact to support the adjacent data pods that remain in operation. Thus, this design of the modular data pod hive allows modular data pods to be added, removed, modified, and retrofitted without affecting the operation of the remaining data pods.

[00250] This design saves time and money because data pods can be removed to a separate area either onsite or offsite where the data pods are restacked with new computer systems or otherwise repaired. The restacked data pods may then be redeployed in the same or different data pod farm. This design especially saves time and money in cases where the data pod is deployed in a remote area because there is no need to send a technician and equipment to the remote area to restack or otherwise repair the data pod. The data pod can simply be transported to a separate area where the data pod can be restacked or repaired.

[00251] FIG. 20 is a schematic diagram and plan view of a large-scale data pod farm 2002. As shown, adjacent hives can be positioned in mirror-image patterns. The mirror-image placement of hives allows for integration among hives. The hives can be deployed in stages or phases over time. Each new hive can be connected to the mirror-image hive adjacent to it in any direction. This community of hives allows for redundancy capabilities within the hive community structure. As shown, the large-scale data pod farm includes access roads that can be used to serve adjacent hives. As shown in FIG. 20, a mobile crane and/or a tractor trailer or other transport vehicle may gain access to modular data pods 80 in the modular data pod farm via access roads 2005 that surround multiple modular data pod hives 1.

[00252] The overall design of the data pod farm incorporates efficient use of data pod shapes and hive patterns to make it possible to deploy a large data pod farm in three to four times less space than a typical data center. Indeed, this modular approach is far more efficient in its use of over all space versus other containerized modular designs. The data pods themselves can be much more tightly packed than a typical modular rectangular or square-shaped data pod such as the data pods in the form of a shipping container. The data pods according to embodiments of the present disclosure can be fed from a modular pump house and electrical buildings, which are also incorporated into a small footprint.

[00253] In conjunction with the foregoing discussion of FIGS. 1-20, FIGS. 21A and 21B illustrate one embodiment of a method 4500 of cooling electronic equipment. The method starts at step 4501 including step 4502 of cooling electronic equipment, e.g., servers 5511a...511n and

533a...533n illustrated in and described with respect to FIG. 3, using a first fluid, e.g., a liquid refrigerant R134a or similar refrigerants. The method also includes step 4502 of free cooling the first fluid by enabling heat transfer from the first fluid to a second fluid, e.g., that has been cooled using atmospheric air, as described with respect to FIG. 6, and mechanically cooling the second fluid to the extent that free cooling the first fluid is insufficient to cool the first fluid. The mechanical cooling of the second fluid is a function of the temperature of the second fluid.

[00254] Step 4506 includes cooling the second fluid before using the second fluid to free cool the first fluid by enabling heat transfer from the second fluid to a third fluid. The method includes in step 4508 compressing the third fluid via sub cooler compressor 4310 in third circuit 4300 in FIG. 6. Step 4510 includes condensing the compressed third fluid by enabling heat transfer from the compressed third fluid to the second fluid via the trim condenser 1200b after using the second fluid to free cool the first fluid. More particularly, condensing the compressed third fluid is performed by trim condenser 1200b.

[00255] Step 4512 includes reducing the pressure of the condensed third fluid, e.g., via thermal expansion valve 4311, to reduce the temperature of the third fluid. Step 4514 includes sensing the wet bulb temperature of the atmospheric air. Step 4516 includes varying the speed of compressing the third fluid, e.g., via sub cooler compressor 4310, as a function of the sensed wet bulb temperature to vary the temperature of the second fluid.

[00256] Step 4518 includes receiving the free-cooled first fluid in a fluid receiver, e.g., fluid receiver 4128. Step 4520 includes sensing the liquid level of the first fluid contained in the fluid receiver 4128, e.g., via level light 4127.

[00257] Step 4522 includes mechanically cooling the first fluid to condense the first fluid when the sensed liquid level in the fluid receiver 4128 falls below a first predetermined level. The mechanical cooling of the first fluid may be performed by fluid circuit 4400 via sub cooler compressor 4410 causing a fourth fluid to flow through sub cooler coil 4129 of the refrigerant liquid receiver 4128 into sub cooling condenser 1300a. Step 4524 includes deactivating the mechanical cooling, e.g., by terminating operation of the sub cooler compressor 4410, when the sensed liquid level in liquid receiver 4128 reaches a second predetermined liquid level that is higher than the first predetermined liquid level.

[00258] Step 4526 includes cooling the first fluid in the fluid receiver 4128 by enabling heat transfer from the first fluid in the fluid receiver 4128 to a fourth fluid. Step 4528 includes compressing the fourth fluid, e.g., via sub cooler compressor 4410. Step 4530 includes condensing the compressed fourth fluid by enabling heat transfer from the compressed fourth fluid to the second fluid that has been cooled using atmospheric air. Step 4532 includes reducing the pressure of the condensed fourth fluid, e.g., via the fourth fluid exiting the sub cooler condenser 1300a to a thermal expansion valve 4420 which expands the fourth fluid back to the sub cooler coil 4129 to reduce the temperature of the fourth fluid.

[00259] The first fluid, the third fluid, and the fourth fluid may contain a refrigerant such as R134A and the second fluid contains water, e.g., condenser water, chilled water, or a glycol solution.

[00260] The method 4500 may also include sensing the temperature of the free-cooled first fluid in first cooling circuit 4100 and regulating the flow rate of the second fluid in second cooling circuit 4200 as a function of the temperature of the free-cooled first fluid, e..g, via the temperature sensor 4126 detecting the temperature of the first fluid when it exits from the main condenser 1300. The readings of the temperature sensor 4126 reflect the temperature of the main condenser 1300. The method ends at step 4621

[00261] FIGS. 22A-22B illustrate a method 4600 of deploying modular data pods to form a data center according to one embodiment of the present disclosure. More particularly, method 4600 starts at step 4601 and includes step 4602 of coupling a plurality of shared fluid and electrical circuit sections of a respective plurality of modular data pods, e.g. modular data pods 80, in series to form a shared fluid and electrical circuit having a first end and a second end. Step 4604 includes coupling an unshared fluid and electrical circuit of each modular data pod 80 of the plurality of modular data pods 80 to a respective shared fluid and electrical circuit section. Step 4606 includes coupling a shared fluid and electrical circuit section at the first end of the shared fluid and electrical circuit to a central fluid and electrical circuit.

[00262] The method 4600 includes the shared fluid and electrical circuit including at least one fluid supply line and at least one fluid return line, e.g., fluid supply headers 2151a, 2152a and 2151b, 2152b, respectively, as shown for example in FIG. 7. As previously described with respect to FIG. 7, the fluid supply headers 2151a, 2152a and fluid return headers may be configured in a reverse-return configuration.

[00263] Referring again to FIGS. 22A-22B, step 4608 includes coupling a central cooling device, e.g., cooling towers CT-1A, CT-1B, CT-2A or CT-2B illustrated in FIG. 15, wherein the cooling device is configured to satisfy at least a portion of the cooling requirements of the plurality of modular data pods 80.

[00264] Step 4610 in FIG. 22A includes coupling a plurality of second shared fluid and electrical circuit sections of a respective second plurality of modular data pods 80 in series to form a second shared fluid and electrical circuit having a first end and a second end, e.g., as described with respect to FIG. 17, the shared fluid and electrical circuit sections are coupled together in series to form a shared fluid and electrical circuit 1705. The shared fluid and electrical circuit 1715 is coupled at a first end 1710 to the fluid supply lines 115a and 115b and the fluid return lines 125a and 125b of the central cooling fluid circuit.

[00265] Step 4612 includes coupling an unshared fluid and electrical circuit of each modular data pod of the second plurality of modular data pods to respective second shared fluid and electrical circuit sections, as described above with respect to FIG. 17.

[00266] Step 4614 includes coupling a second shared fluid and electrical circuit section at the first end of the second shared fluid and electrical circuit to a first shared fluid and electrical circuit section at the second end of the shared fluid and electrical circuit, as described above with respect to FIG. 17.

[00267] Step 4616 includes coupling shared fluid and electrical circuit sections of a second plurality of modular data pods 80 in series to form a second shared fluid and electrical circuit having a first end 1702 and a second end 1706.

[00268] Step 4618 includes coupling an unshared fluid and electrical circuit of each modular data pod, e.g., coolant supply lines 4101a, 4102a, 4103a and coolant return lines 4101b, 4102b, 4103b in FIG. 7, of the second plurality of modular data pods 80 to respective second shared fluid and electrical circuit sections, e.g., as described above with respect to FIG. 17.

[00269] Step 4620 includes coupling a second shared fluid and electrical circuit section of a modular data pod of the second plurality of modular data pods at the first end of the second shared fluid and electrical circuit to the central fluid and electrical circuit. e.g., as described above with respect to FIG. 17.

[00270] The central cooling device is a first central cooling device, e.g.. cooling tower CT-1A, CT-1B, CT-2A, CT-2B, as illustrated in FIGS. 14 and 15. If one of the cooling towers CT-1A, CT-1B, CT-2A, CT-2B cannot satisfy at least a portion of the cooling requirements of the second plurality of modular data pods 80, the method 4600 includes coupling a second central cooling device CT-1A, CT-1B, CT-2A, CT-2B to the central fluid and electrical circuit

[00271] The method 4600 includes wherein each modular data pod of the plurality of modular data pods 80 includes a data enclosure, e.g. data enclosure 108 of modular data pod 80 in FIG. 2D, and an auxiliary enclosure, e.g., auxiliary enclosure 828 in FIG. 2D, containing a respective shared fluid and electrical circuit, and wherein the shared fluid and electrical circuit forms a linear path, e.g.. chains 122, 124, 126 in FIG. 17, further including the step of coupling the data enclosures to the auxiliary enclosures on alternating sides of the shared fluid and electrical circuit, as illustrated in FIG. 17.

[00272] As illustrated in FIG. 20, adjacent data enclosures on the same side of the shared fluid and electrical circuit form a pathway 1 providing a user access to the auxiliary enclosure 818.

[00273] The modular data pod may be designed to use higher cooling temperatures than standard comfort cooling temperatures (e.g., above 75° F at the inlet to the pod). The pods can use cold water (e.g., de-ionized water), refrigerant, a hybrid of cold water and refrigerant, or cold air to maintain the cooling temperature at a higher level than typical comfort cooling temperatures. The temperature of the cooling air (or other cooling fluid) is maintained safely above the dew point temperature within the modular data pod envelop to protect against condensation. The modular data pods may include one or more humidifiers and an associated controller to maintain the humidity of the air internal to the modular data pod at a desired level. The one or more humidifiers may be housed in an adjacent pump chamber so as to separate the water management system (e.g., leak control) from the other systems associated with the modular data pod. The pods may also control the humidity of the internal air using a combination of humidifiers or other methods that use water or steam.

[00274] A data center including multiple modular data pods can be deployed with less base infrastructure than a typical stick-built data center. This saves upfront costs for sites that are not intended to have a high data load in early deployment phases. The systems are scalable and require far less infrastructure for the initial deployment.

[00275] Most of the components on the electrical, mechanical, and IT infrastructure systems can be integrated into prefabricated support structures, which significantly reduces the amount of time and money it takes to deploy the data pod system in the field.

[00276] The designs of the cooling systems and the modular data pods provide the flexibility to adjust to the tier-specific needs of an intended data center project. Large deployment systems such as warehouse hives and farm hives are designed to have expandable features that allow the system to expand in tier capability should it become necessary to do so over time. The methodology to increase the system tier capability over time is called shared hives. The basic system design includes valve components and emergency control strategies that enable the system to be fed from cooling sources in adjacent hives. This hive interlocking feature enables modular data pods to be fed from supplemental cooling sources if necessary.

[00277] The cooling process (cycle) provided by cooling system 10 enables close tolerances in approach temperatures between atmospheric conditions (wet bulb temperature) and the entering air temperatures to IT rack cooling. The cycle is designed to utilize environmental conditions (low wet bulb temperatures) to fully handle rack cooling load when environmental conditions permit. It also includes a back up system of sub cooling processes that enable the system to handle the cooling loads in spite of spikes in wet bulb temperatures. This is accomplished by optimizing to the specific heat characteristics of the cooling media (R134a) or other refrigerants.

[00278] The indirect cooling cycle provided by the cooling system 10 is capable of maintaining IT rack inlet temperature, utilizing a sub-cooler system that can be sized to less than about 15% of what would normally be required to in either DX or chiller capacity.

[00279] Thus, the modular data pod is designed to be added to or removed from a data pod hive or a data pod chain. In particular, each modular data pod is designed to include system components that allow the modular data pod to be added to the hive. The HVAC pipe and electrical conduits included in each modular data pod form a link between the existing, the new, and the future modular data pods on the modular data pod chain.

[00280] The pipe chase of each modular data pod includes dual reverse-return pipe circuits. These circuits are intended to continue the reverse return capabilities of the system as each new modular data pod is deployed on a modular data pod chain. This feature enables the addition or removal of pods without shutdowns or costly water system balancing problems. Alternatively, the modular pods may include direct feed mains (versus reverse-return mains) or single, non-redundant mains. These pods can be used on tier 1 type facilities where self balancing, reliability, and redundancy issues are less critical.

[00281] Each fluid or pipe circuit is fitted with valves and appurtenances needed to deploy the pipe circuit, fill the pipe circuit with site-specific operating fluid, and commission the pipe circuit. The system may incorporate a strict process that allows the reverse-return circuits to be continued or extended. The process includes filling, venting (burping), and hydrostatically testing the circuit before the modular data pod is introduced to the system of modular data pods. This process duplicates the hydrostatic or pneumatic fitness testing that is done in the factory to ensure that the pipe circuit is not compromised in transit or during deployment. This allows a modular data pod to be added seamlessly to a data pod system without affecting the operation of adjacent modular data pods, or causing costly unintended shutdowns.

[00282] The end unit on each pod chain includes a bypass tee arrangement on each of the two reverse-return circuits. This enables future expansion of pods to the data pod chain without shutting down the previous data pods on a data pod chain.

[00283] Each data pod chain in a data pod hive 1 is designed to include integral but fully-detachable dual pipe, electrical, and IT system infrastructure located, for example, in the lower section of the modular data pod. This mechanical/electrical chase section is designed to be isolated from the main data pod envelop. The rear section or auxiliary enclosure is detachable from the main pod assembly to enable the data envelop or enclosure to be removed. The modular data pod may be periodically removed to an off-site location to restack the computer servers or to maintain or upgrade the mechanical, electrical, or control systems of the modular data pods. The pipes and conduits may include attachment mechanisms (e.g., flange or break-away bolts or wiring harness plugs) to facilitate easy detachment and re-attachment of the pipes and conduits to the modular data pod assembly. The pipe and conduit chase may include walls, membranes, and sealants to provide a water-tight seal between the chase and the modular data pod envelop.

[00284] When modular data pods 80 are installed in outdoor environments, the pipe circuits of each modular data pod 80 may include heat tracing, insulation, and insulation protection. Each modular data pod may have its own heat tracing panel that is fully integrated with the BMS, which may provide alarm and status information.

[00285] Each pod may include leak containment pans below each coil bank. The pans may include leak detectors that are linked to the BMS. The BMS may trigger an alarm or otherwise notify an operator when a leak or other abnormal condition (e.g., high humidity within the modular data center envelop) is detected.

[00286] Each pod may be fitted with leak detection sensors that can be deployed at strategic points within the modular data center envelop, the pump, the heat exchanger chamber, and the detachable pipe/electrical chamber. The leak detection system may be fully integrated with the BMS, which can provide alarm and status information.

[00287] The modular data pods are designed to handle high density server equipment, such as fully redundant 40 kW server racks. The modular data pod design is scalable to accommodate increased power output per cubic foot of server equipment as a result of advances in server technology. Scaling the modular data pod design may require refitting the heat exchanger and pumping equipment and the power distribution to the server racks. The extent of any modifications made to scale the modular data pod design may depend on the amount of increase in power output.

[00288] The modular data pod cooling mains may be steel pipe, Polyvinyl chloride (PVC) pipe, stainless steel pipe, copper pipe, fiberglass pipe, reinforced concrete pipe (RCP), or other types of pipe. The type, gauge, strength, and thickness of the pipe depend on the requirements of a particular data pod system.

[00289] The modular data pods may be either mass produced or individually custom made to meet given specifications.

[00290] The modular approach, which involves building and deploying modular data pods and modular pumping and electrical equipment, is a cost-effective way to build data centers. For example, the modular approach significantly reduces field labor costs and risks because field labor is only needed to install and deploy the modular data pods and the modular pumping and electrical equipment.

[00291] Energy costs can be reduced by installing modular data pods according to the present disclosure in a warehouse or similar facility. This is because the space within each modular data pod envelop is the only space within the warehouse that requires conditioning. The warehouse space outside each modular data pod requires minimum ventilation. This is significant because the modular data pods are designed to save space by their small physical foot print. Thus, the warehouse or similar facility can be smaller.

[00292] A typical data center requires a minimum foot print to treat the air in the hot and cold aisles defined by server rack assemblies that are spread out across a data center floor. For example, a 10,000 square foot data center may house approximately 200-220 server racks. Each rack may have the ability to generate on average between 6 and 12 kW. Some racks can generate higher outputs, e.g., 16-24 kW. In contrast, the modular data pod according to some embodiments of the present disclosure can attain high enough levels of heat rejection to cool eight server racks consuming over 40 kW in a relatively small physical footprint.

[00293] The tight circular configuration of server racks in embodiments of the modular data pod results in reduced energy costs because less energy is needed to cool the relatively small air space within the modular data pod. Also, because of the tight configuration of server racks and aisle containment, the modular data pod needs less fan horse power for airflow pattern control.

[00294] The modular data pods can be fed from modular pumping pods that get fluid from cooling towers, fluid coolers, chillers, geothermal systems, or existing building or plant water systems.

[00295] The geometric shape of the modular data pod container in conjunction with the circular configuration of the server racks provides efficient use of space and creates natural hot aisle/cold aisle containment and natural "chimney effect" for hot air pattern control.

[00296] An additional benefit of the all inclusive modular design allows for a greater amount of security and compartmentalization for deployment in "cooperative"-type data warehouses and suites. The modular box creates segregation from other IT server racks within the cooperative. The boxes can be locked and easily monitored for security purposes.

[00297] The tight, circular configuration of server racks within the modular data pod facilitates much tighter groupings of interrelated servers and IT equipment, e.g., parent/child, master/slave, and redundant servers. This tight configuration allows for shorter fiber and cable runs between IT interdependent components.

[00298] The tight packing of the actual modular data pods into a hive allows for shorter cabling and fiber run lengths than would be needed in a normal data floor build out. The hive structure can be purposefully patterned to allow interdependent IT systems to be efficiently grouped in deployment. These interdependent groupings may reduce cabling and fiber lengths. These reductions not only reduce labor and material costs, but also reduce operating costs because of shorter data cable runs.

[00299] The modular data pods may include real-time data monitoring servers capable of producing real-time monitoring of critical IT loading, IT status, cooling, and power system performance. The modular data pods may also include external touch pad system status and monitoring display panels.

[00300] The modular data pods can also be scaled down in physical sizes for low rack density applications. Smaller applications can utilize pentagon, hexagon, or other polygonal shapes that are more beneficial in smaller modular data pods.

[00301] Embodiments of the modular data pod design, either taken individually or in a system, provides a cost benefit over typical data centers that are stick built. The cost of a partial or full-system deployment of modular data pods is at least 30% less than stick-built or site-built data centers.

[00302] The deployment of modular data pods needs far less on-site man hours for construction. This significantly reduces the overall schedule for a data center project, especially data center projects in remote locations.

[00303] The pipe, IT fiber conduits, and electrical chase containment area is fully detachable from the main data pod assembly. The chase can be fitted with leak detection and leak control measures that isolate the water systems transport lines from the actual IT data pod envelop. There is no "mixed space" use of data areas and cooling water. The modular data pods may include either refrigerant loops or de-ionized water applications. No external cooling water (other than de-ionized non-conductive water if water application is used) enters the actual data pod envelop.

[00304] The modular data pods can be coupled to cooling systems that use innovative control strategies to attain high efficiencies. The cooling system can use innovative control strategies that allow it to operate at extremely high efficiencies for data center power use standards. The system may use control strategies that allow it to operate at 1.1 PUE levels for areas or zones that have beneficial wet bulb conditions.

[00305] For environments that experience unfavorable wet bulb conditions, the cooling systems can include a chiller to assist the water-cooled cooling system when the wet bulb conditions deteriorate to the point where the system load can no longer be handled by atmospheric conditions.

[00306] The data pods may be fed electrical power via home-run conduits, cable-bus duct, or standard-bus duct, at either low or medium voltage. The electrical infrastructure may be built into each pod and have the ability to be expandable and adaptable if it or an adjacent pod is added to or removed from a pod chain.

[00307] Each modular data pod may include its own uninterruptible power supply (UPS) or the ability to connect to a UPS main system, e.g., for large deployment applications. The pods may be fed with dual redundant UPSs, such as the rotary style or the static type UPSs. The pods may also be configured to receive transformers and chargers. The transformers, UPS, one or more batteries, and distribution panels may be housed in compartments external to the actual data pod envelop.

[00308] The base of the pod can be fitted with one or more back-up batteries for emergency power. The pods can also be fitted with an interior ring-type electrical bus carrier similar to a plug in an electric bus. Each pod can have a charger capable of recharging the one or more batteries. The one or more back-up batteries may be charged via alternative or green energy feeds. The interstitial space between racks may be used to incorporate the power and data patch plug points for each computer rack.

[00309] The pod electrical connectors between the main bus feed and the modular data pod envelop may be removable and allow the pods to be disconnected from the main bus feed to allow removal and redeployment of pod envelops. Each modular data pod may incorporate DC diode decoupling capabilities.

[00310] The pods will have the ability to be illuminated on the exterior with color-coded light (e.g., a LED or fiber optic light). The color and intensity of the light may depend on the type and density of the operating load.

[00311] The pod electrical systems can be adaptable depending on the specific tier requirements for a given data center project, e.g., tiers 1-4.

[00312] The battery circuiting can be modified to include adjacent pod battery backup capabilities should it be required for a specific project.

[00313] The pods may feature custom removable computer racks. The computer racks may be designed to be adaptable so as to be capable of handling both small and large server support loading. The computer racks will also have features to allow the servers to be tilted to provide a hot air pattern at the back of the computer rack (e.g., server rack) that is an upward flow pattern. The computer racks may handle servers that have rear and side-blow airflow patterns.

[00314] The modular data pods may include water and British Thermal Unit (BTU) meters for operating, monitoring, and controlling the cooling system. The modular data pods may include a control system and all of the necessary control panels and components to control, monitor, and optimize the modular data pod and associated systems.

[00315] The modular data pods may be capable of tying into the smart grid system and use cloud computing technology for load shedding and redirection of processing information to alternative pods and off-site data collection sites.

[00316] The modular data pods can be sealed or unsealed. Sealed pods may include or be coupled to equipment that creates a vacuum within the pod or changes the composition of the air within the pod (e.g., removal of oxygen) to increase heat transfer and suppress fire.

[00317] While several embodiments of the disclosure have been shown in the drawings and/or discussed herein, it is not intended that the disclosure be limited thereto, as it is intended that the disclosure be as broad in scope as the art will allow and that the specification be read likewise. Therefore, the above description should not be construed as limiting, but merely as exemplifications of particular embodiments. Those skilled in the art will envision other modifications within the scope and spirit of the claims appended hereto.

CLAIMS

What is claimed is:

1. A system for cooling electronic equipment, comprising:

a free-cooling system configured to cool a first fluid in thermal communication with electronic equipment using atmospheric air; and

a mechanical sub-cooling system coupled to the free-cooling system, the mechanical system configured to cool a second fluid flowing in the free-cooling system as a function of an amount by which the free-cooling system has exceeded its maximum cooling capacity;

wherein the free-cooling system comprises:

a free-cooling device configured to cool the second fluid using atmospheric air; and

a main heat exchanger in fluid communication with the free-cooling device, the main heat exchanger configured to enable heat transfer from the first fluid to the second fluid;

wherein the mechanical sub-cooling system comprises:

a first heat exchanger configured to enable heat transfer from the second fluid flowing into the main heat exchanger to a third fluid flowing through the first heat exchanger;

a compressor in fluid communication with the first heat exchanger and configured to compress the third fluid flowing out of the first heat exchanger;

a second heat exchanger in fluid communication with the compressor and configured to enable heat transfer from the compressed third fluid to the second fluid flowing out of the main heat exchanger; and

a pressure reducing unit fluidly coupled between the first heat exchanger and the second heat exchanger, the pressure reducing unit configured to reduce the temperature of the third fluid flowing from the second heat exchanger to the first heat exchanger.

2. The system according to claim 1, wherein the mechanical sub-cooling system is configured to cool the second fluid flowing into the main heat exchanger as a function of the temperature of the second fluid.

3. The cooling system according to claim 2, further comprising

a temperature sensor configured to sense a wet bulb temperature of atmospheric air; and a controller coupled to the sensor and the compressor, the controller configured to vary the speed of the compressor as a function of the sensed wet bulb temperature of atmospheric air.

4. The system according to claim 2, further comprising:

a fluid receiver configured to receive the first fluid flowing out of the main heat exchanger;

a sensor configured to sense the liquid level of the first fluid contained in the fluid receiver; and

a second mechanical sub-cooling system configured to cool the first fluid when the liquid level of the first fluid contained in the fluid receiver falls below a predetermined level.

5. The system according to claim 4, wherein the second mechanical sub-cooling system comprises:

a third heat exchanger disposed in the fluid receiver and configured to enable heat transfer from the first fluid contained in the fluid receiver to a fourth fluid flowing through the third heat exchanger;

a second compressor in fluid communication with the third heat exchanger and configured to compress the fourth fluid flowing out of the third heat exchanger;

a fourth heat exchanger in fluid communication with the second compressor and configured to enable heat transfer from the compressed fourth fluid to the second fluid; and

a pressure reducing unit fluidly coupled between the third heat exchanger and the fourth heat exchanger, the pressure reducing unit configured to reduce the temperature of the fourth fluid flowing from the fourth heat exchanger to the third heat exchanger.

6. The cooling system according to claim 5, wherein the first fluid, the third fluid, and the fourth fluid contain a refrigerant and the second fluid contains water.

7. The cooling system according to claim 6, wherein the refrigerant is R134A and the second fluid is condenser water, chilled water, or a glycol solution.

8. The cooling system according to claim 7, wherein the mechanical sub-cooling system is closely coupled to the electronic equipment.

9. A method of cooling electronic equipment, comprising:

cooling electronic equipment using a first fluid;

free cooling the first fluid by enabling heat transfer from the first fluid to a second fluid that has been cooled using atmospheric air; and

mechanically cooling the second fluid to the extent that free cooling the first fluid is insufficient to cool the first fluid,

wherein mechanically cooling the second fluid comprises:

cooling the second fluid before using the second fluid to free cool the first fluid by enabling heat transfer from the second fluid to a third fluid;

compressing the third fluid;

condensing the compressed third fluid by enabling heat transfer from the compressed third fluid to the second fluid after using the second fluid to free cool the first fluid; and

reducing the pressure of the condensed third fluid to reduce the temperature of the third fluid.

10. The method according to claim 9, wherein mechanically cooling the second fluid includes mechanically cooling the second fluid as a function of the temperature of the second fluid.

11. The method according to claim 10, further comprising

sensing a wet bulb temperature of the atmospheric air; and

varying the speed of compressing the third fluid as a function of the sensed wet bulb temperature to vary the temperature of the second fluid.

12. The method according to claim 10, further comprising

receiving the free-cooled first fluid in a fluid receiver;

sensing the liquid level of the first fluid contained in the fluid receiver;

mechanically cooling the first fluid to condense the first fluid when the sensed liquid level falls below a first predetermined liquid level; and

deactivating mechanical cooling when the sensed liquid level reaches a second predetermined liquid level higher than the first predetermined liquid level.

13. The method according to claim 12, wherein mechanically cooling the first fluid comprises:

cooling the first fluid in the fluid receiver by enabling heat transfer from the first fluid in the fluid receiver to a fourth fluid;

compressing the fourth fluid;

condensing the compressed fourth fluid by enabling heat transfer from the compressed fourth fluid to the second fluid that has been cooled using atmospheric air; and

reducing the pressure of the condensed fourth fluid to reduce the temperature of the fourth fluid.

14. The method according to claim 13, wherein the first fluid, the third fluid, and the fourth fluid contain a refrigerant and the second fluid contains water.

15. The method according to claim 14, wherein the refrigerant is R134A and the second fluid is condenser water, chilled water, or a glycol solution.

16. The method according to claim 9, further comprising:

sensing the temperature of the free-cooled first fluid; and

regulating the flow rate of the second fluid as a function of the temperature of the free-cooled first fluid.

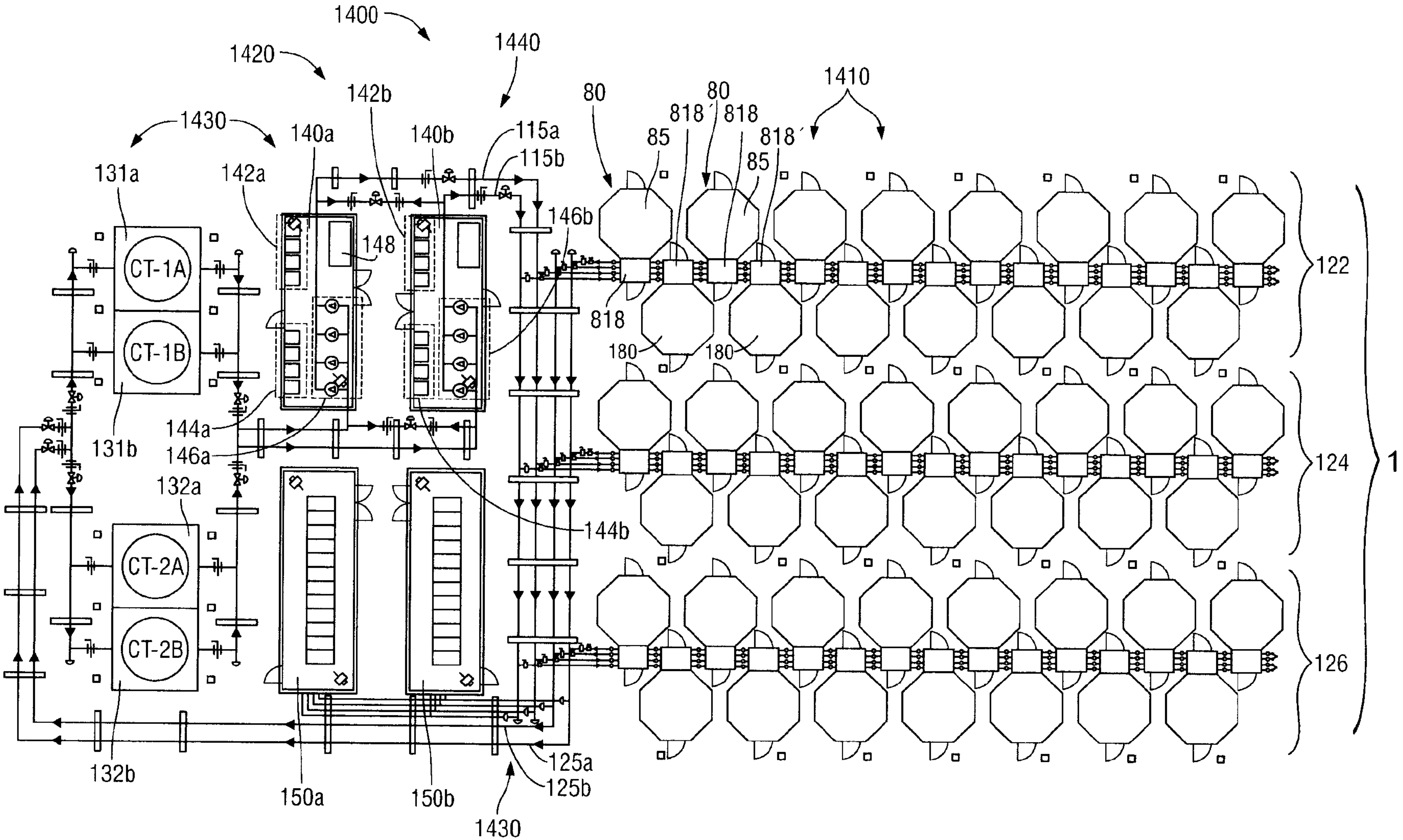
1400
1420
1440
1430
131a
142a
140a
142b
140b
115a
115b
80
85
818´
80
818
85
818´
1410
148
146b
818
180
180
122
CT-1A
CT-1B
131b
144a
146a
124
1
132a
CT-2A
144b
CT-2B
126
132b
150a
150b
125a
125b
1430

FIG.1

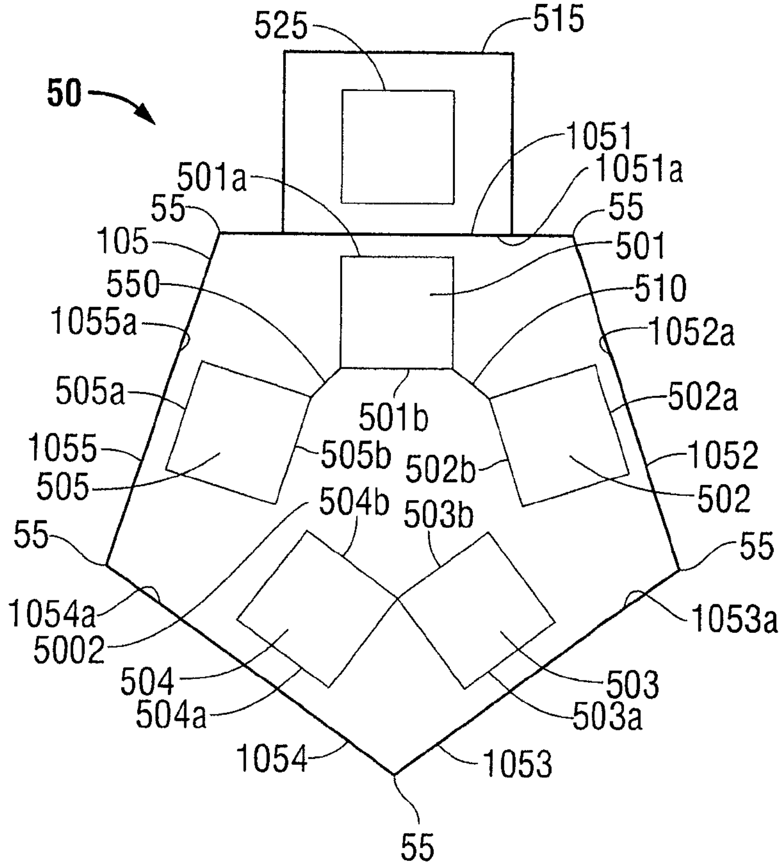
50
525
515
1051
1051a
501a
55
55
105
501
550
510
1055a
1052a
505a
501b
502a
1055
505b
502b
1052
505
502
504b
503b
55
55
1054a
1053a
5002
504
503
504a
503a
1054
1053
55

FIG. 2A

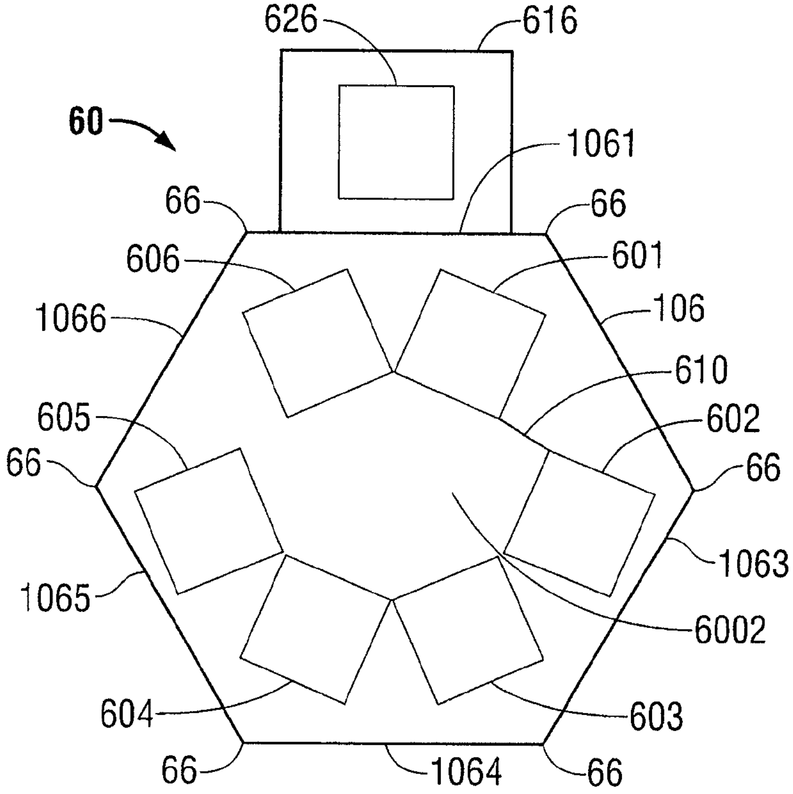
626
616
60
1061
66
66
606
601
1066
106
610
605
602
66
66
1063
1065
6002
604
603
66
1064
66

FIG. 2B

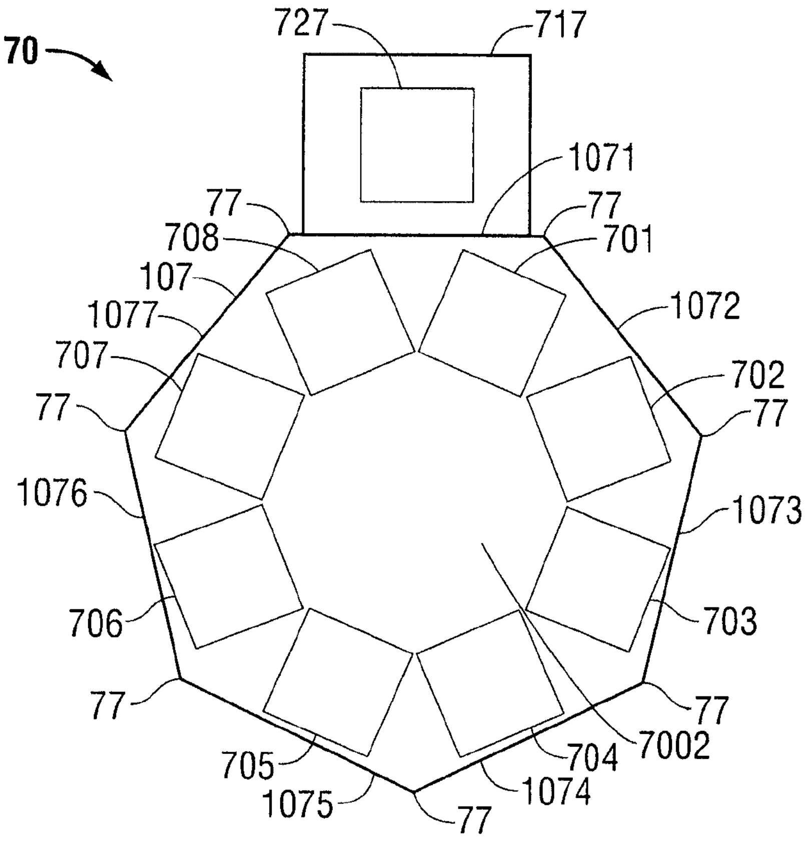
70
727
717
1071
77
708
77
701
107
1072
1077
707
702
77
77
1076
1073
706
703
77
77
705
704
7002
1075
1074
77

FIG. 2C

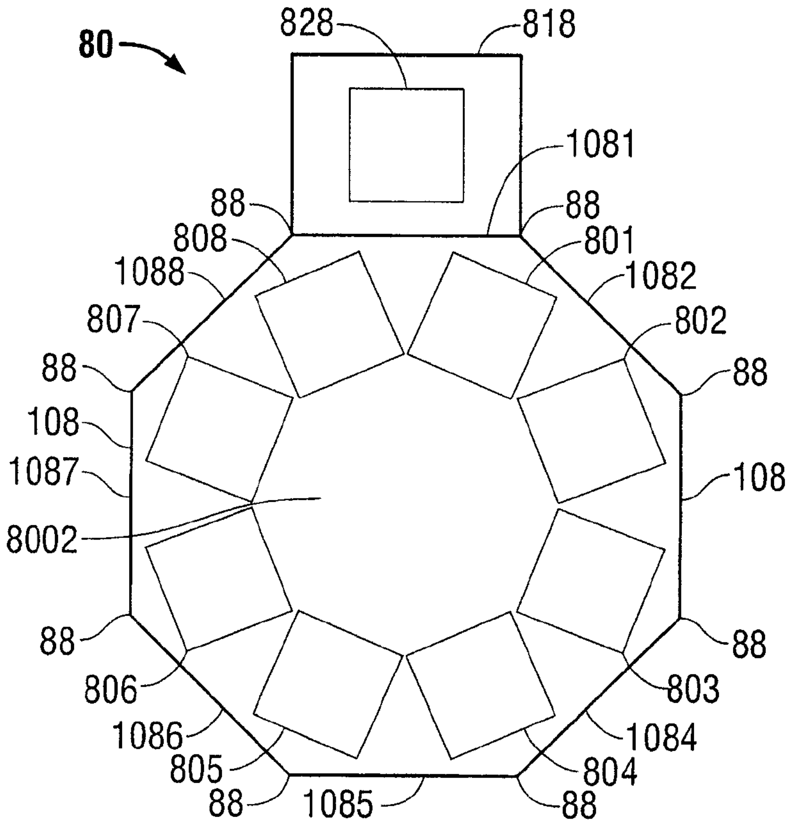
80
828
818
1081
88
88
808
801
1088
1082
807
802
88
88
108
1087
1083
8002
88
88
806
803
1086
1084
805
804
88
1085
88

FIG. 2D

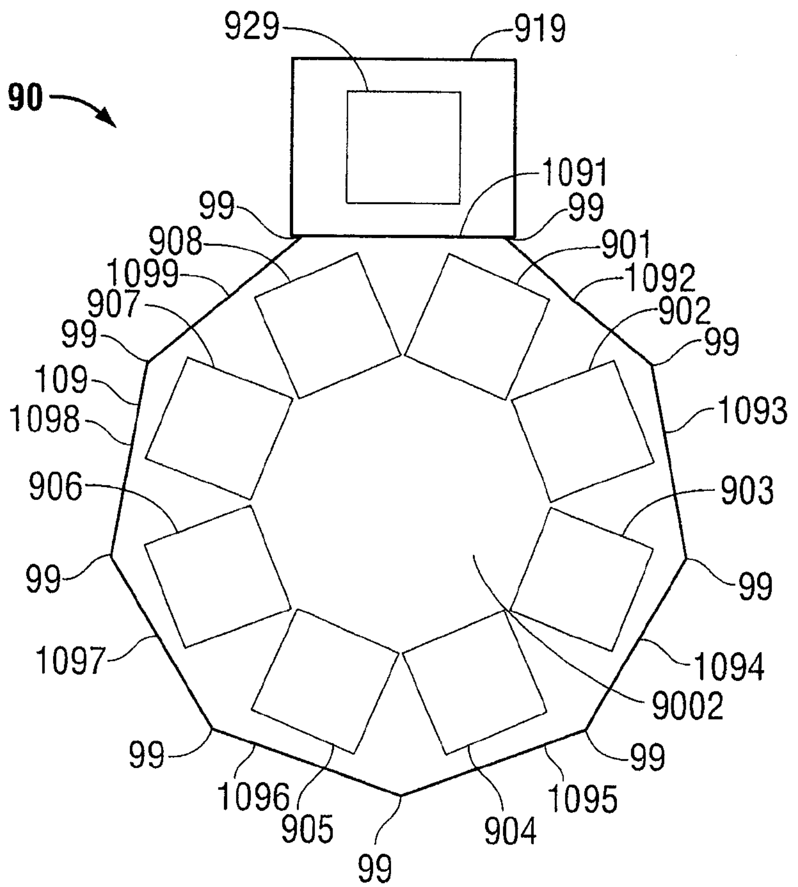
90
929
919
1091
99
908
1099
907
109
1098
906
1097
901
1092
902
1093
903
1094
9002
1096
905
904
1095

FIG. 2E

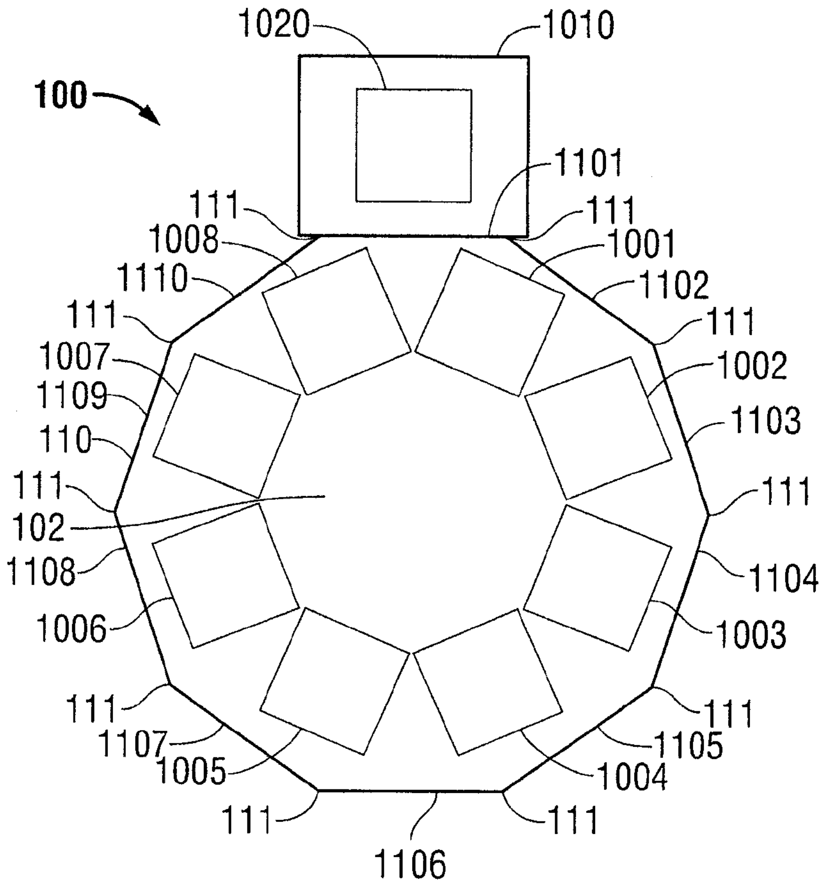
100
1020
1010
1101
111
1008
1110
1007
1109
110
102
1108
1006
1107
1005
1001
1102
1002
1103
1104
1003
1105
1004
1106

FIG. 2F

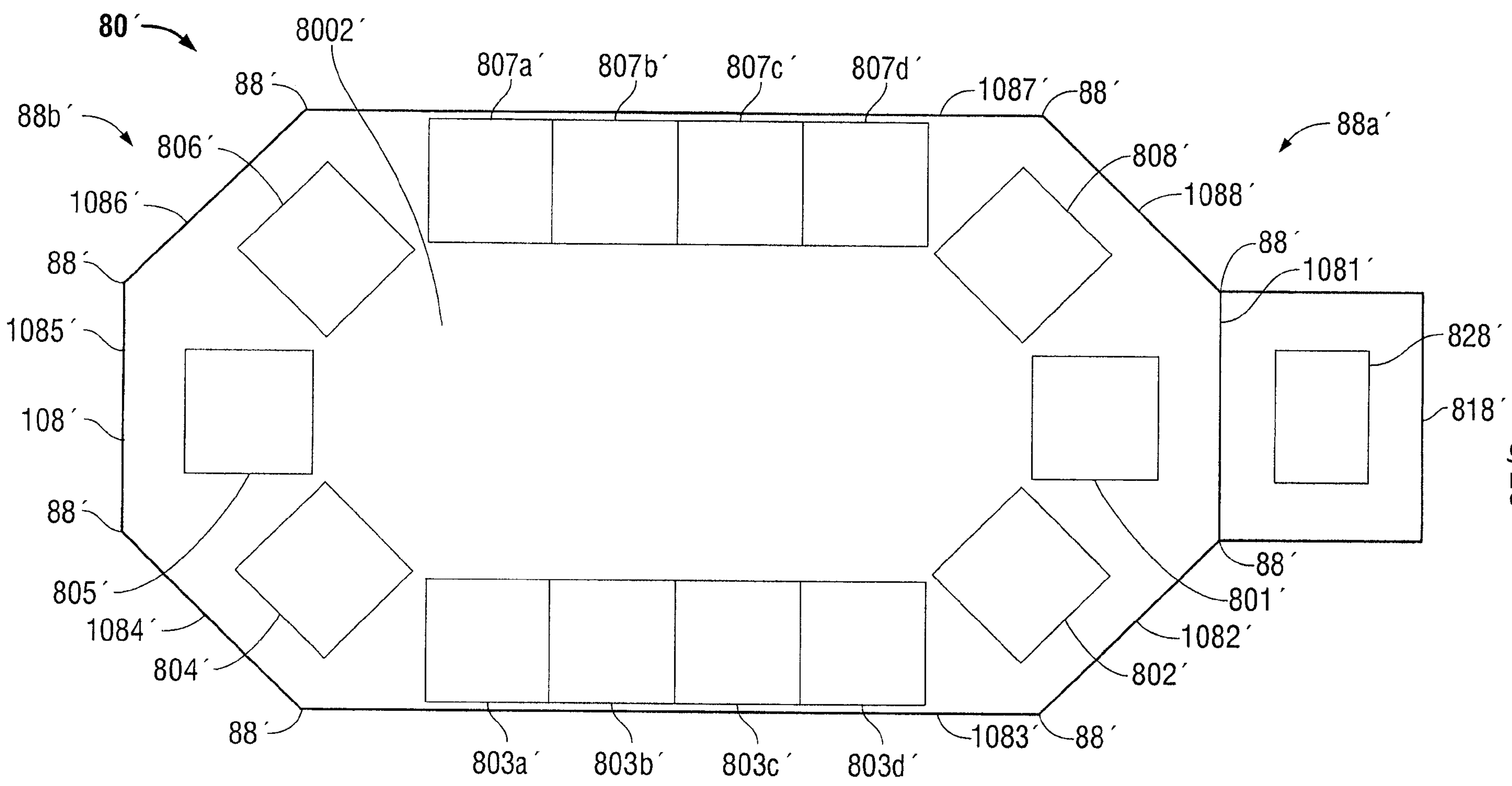
80´
8002´
807a´
807b´
807c´
807d´
1087´
88´
88a´
88b´
806´
808´
1086´
1088´
88´
88´
1081´
88´
828´
1085´
108´
818´
88´
88´
805´
801´
1084´
1082´
804´
802´
88´
803a´
803b´
803c´
803d´
1083´
88´

FIG. 2G

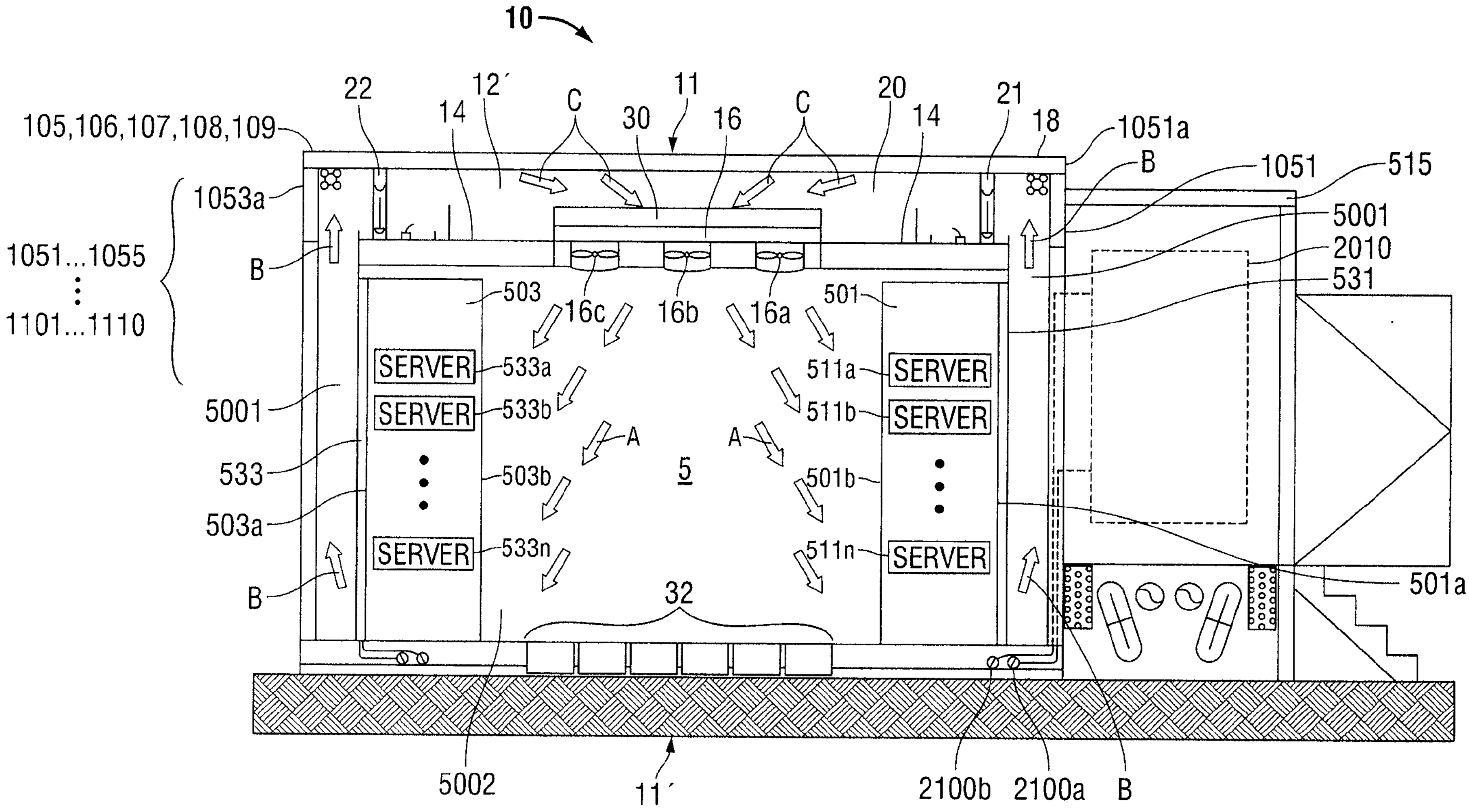
10
105,106,107,108,109
1053a
1051...1055
⋮
1101...1110
22
14
12´
C
30
11
16
C
20
14
21
18
1051a
B
1051
515
5001
2010
531
B
503
16c
16b
16a
501
SERVER
533a
SERVER
533b
511a
SERVER
511b
SERVER
5001
533
503a
A
5
A
503b
501b
SERVER
533n
511n
SERVER
501a
B
32
B
5002
11´
2100b
2100a
B

FIG. 3

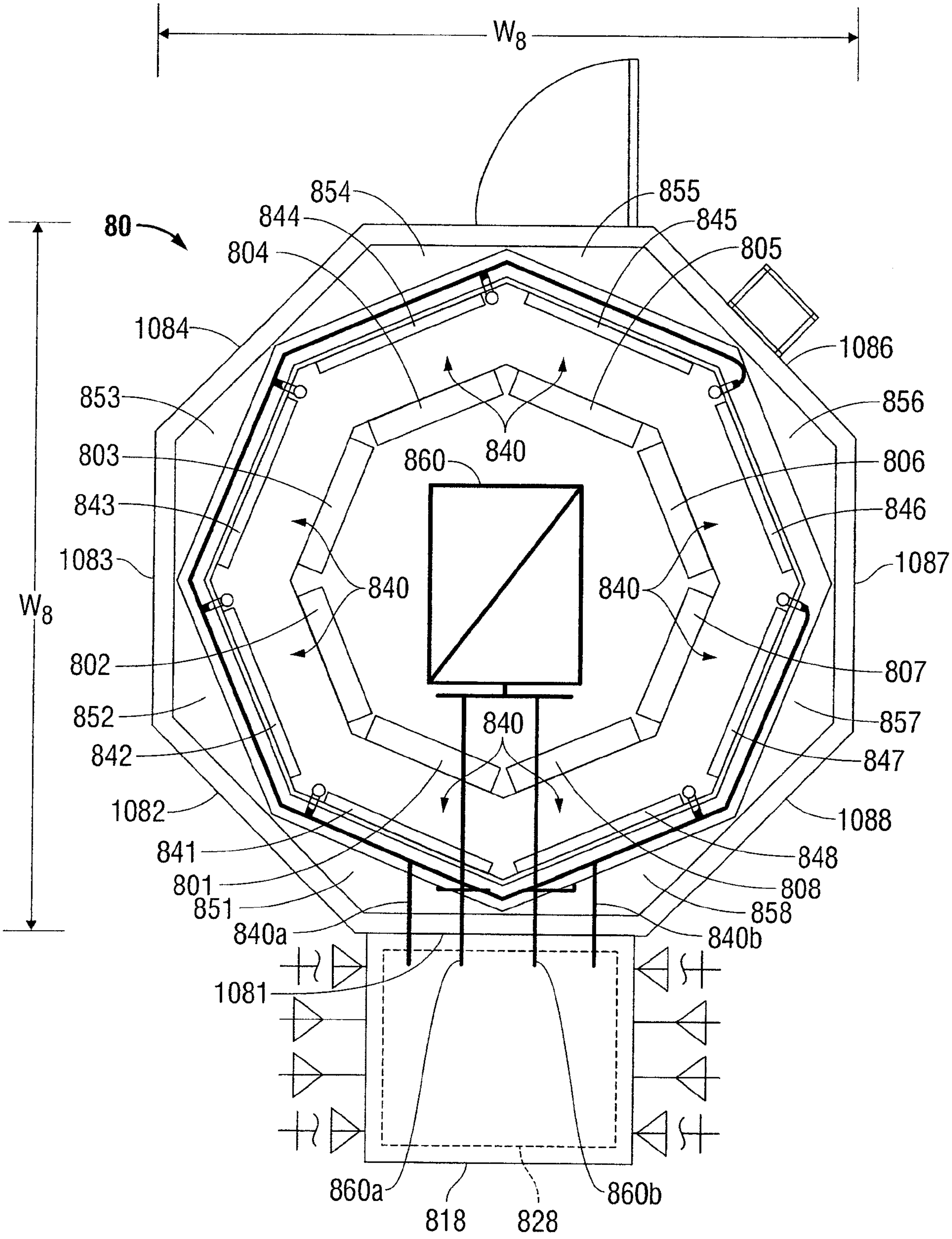
W8
80
854
855
844
845
804
805
1084
1086
853
856
803
860
840
806
843
846
1083
1087
840
840
W8
802
807
852
857
840
842
847
1082
1088
841
848
801
808
851
858
840a
840b
1081
860a
860b
818
828

FIG. 4

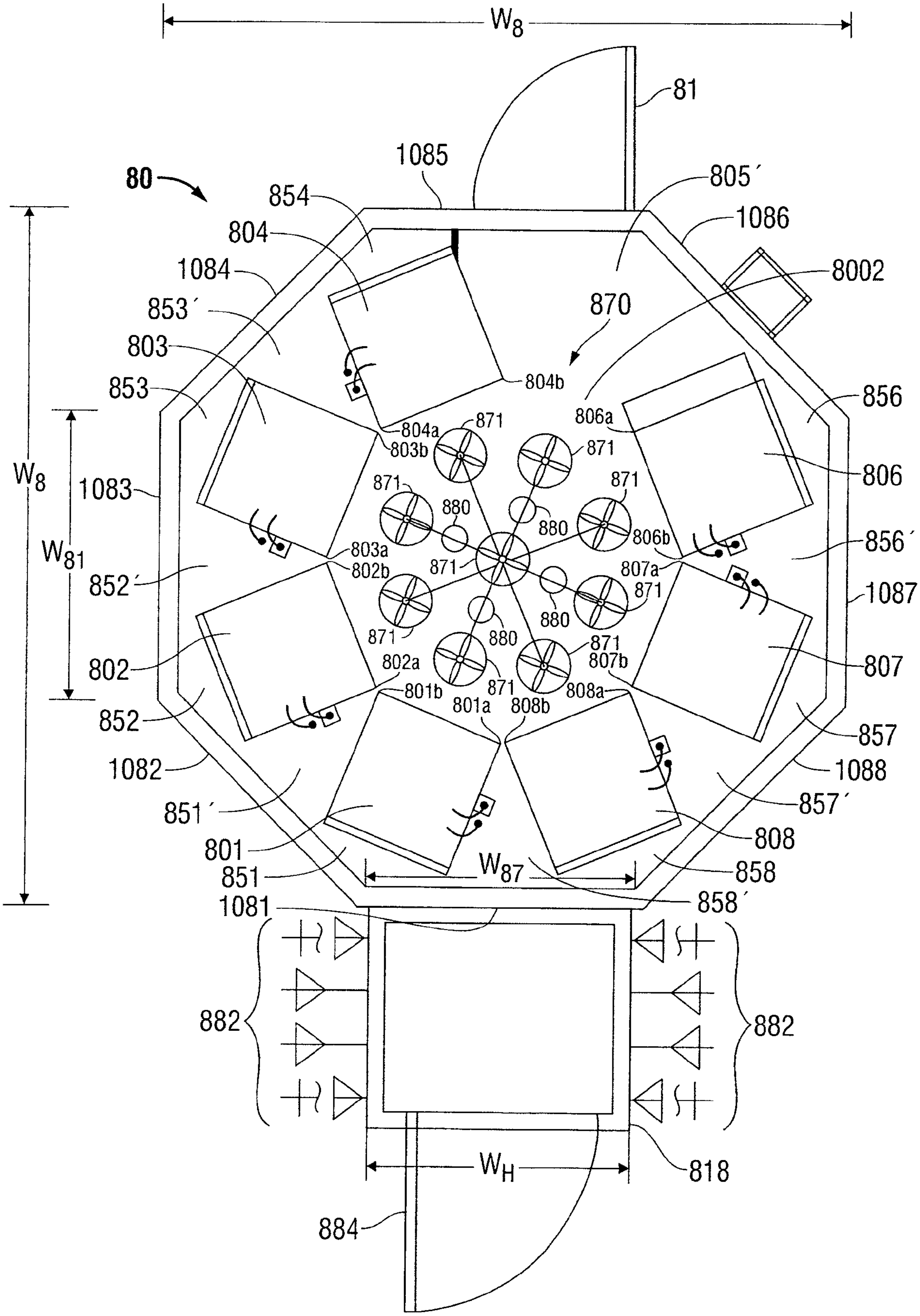
W8
81
80
1085
854
805′
1086
804
8002
1084
870
853′
803
804b
853
806a
856
804a
871
803b
871
806
W8
1083
871
871
W81
880
880
806b
856′
871
803a
802b
880
852′
871
807a
1087
871
880
871
880
802
871
807b
807
802a
801b
801a
808b
808a
871
852
857
1082
1088
851′
857′
801
808
851
W87
858
1081
858′
882
882
818
WH
884

FIG. 5

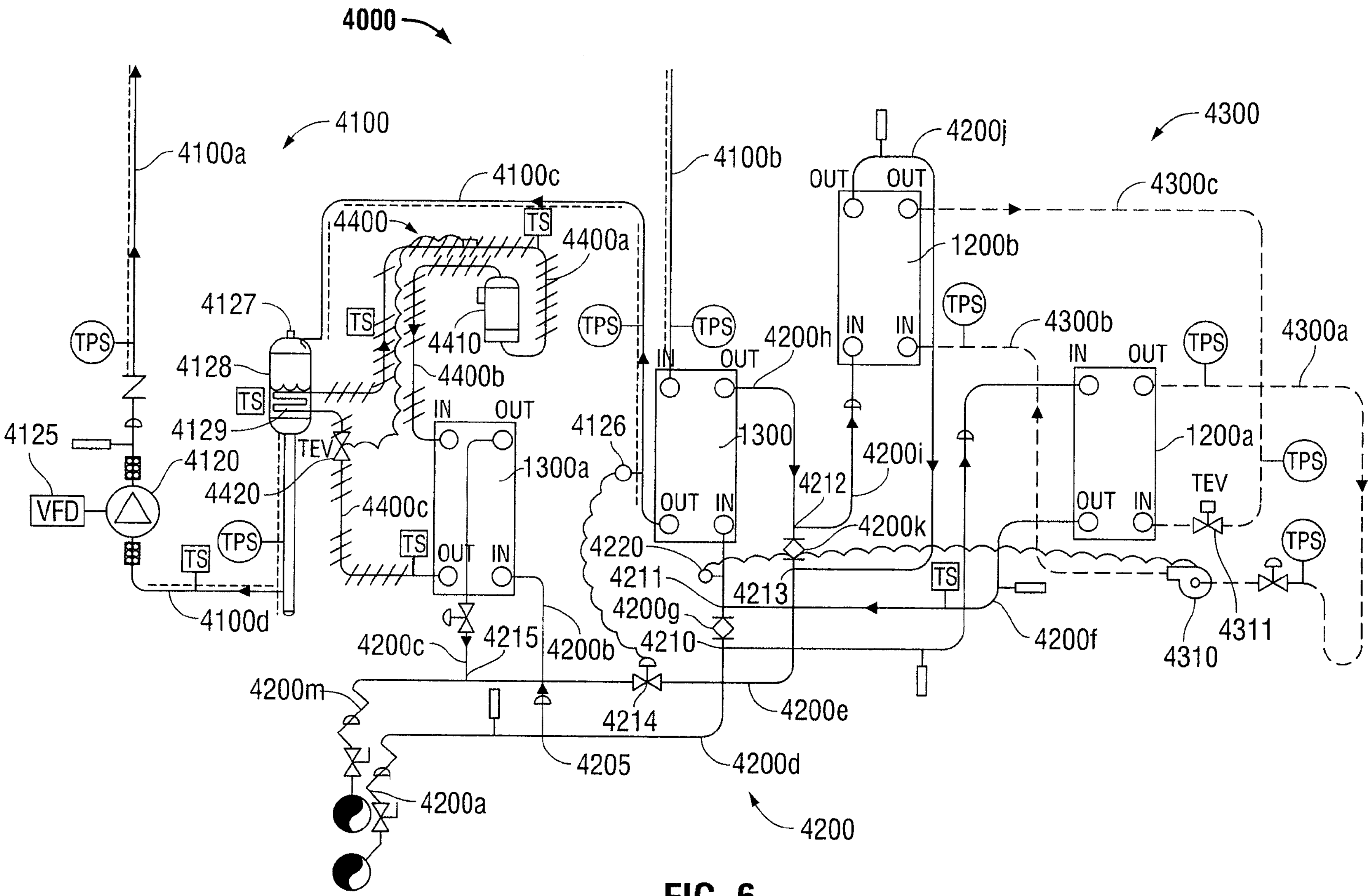
4000
4100
4100a
4100b
4100c
4100d
4120
4125
4126
4127
4128
4129
4200
4200a
4200b
4200c
4200d
4200e
4200f
4200g
4200h
4200i
4200j
4200k
4200m
4205
4210
4211
4212
4213
4214
4215
4220
4300
4300a
4300b
4300c
4310
4311
4400
4400a
4400b
4400c
4410
4420
1200a
1200b
1300
1300a
IN
OUT
TPS
TS
TEV
VFD

FIG. 6

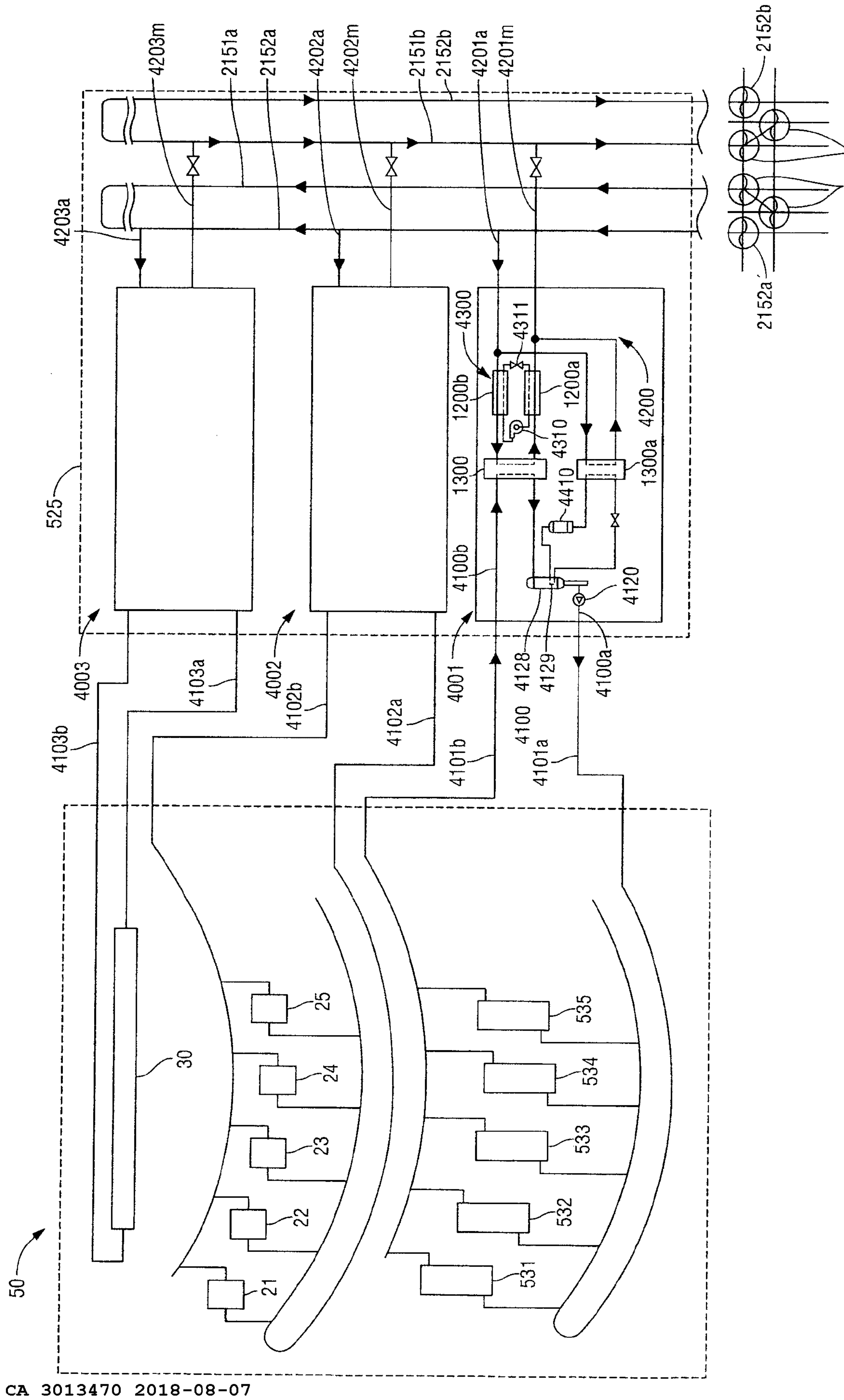
4203m
2151a
2152a
4202a
4202m
2151b
2152b
4201a
4201m
2152b´
2151b´
2151a´
2152a´
4203a
525
4300
4311
1200b
1200a
4310
4200
1300
1300a
4410
4100b
4120
4003
4002
4001
4128
4129
4100a
4103a
4102b
4102a
4100
4103b
4101b
4101a
30
25
24
23
22
21
535
534
533
532
531
50

FIG. 7

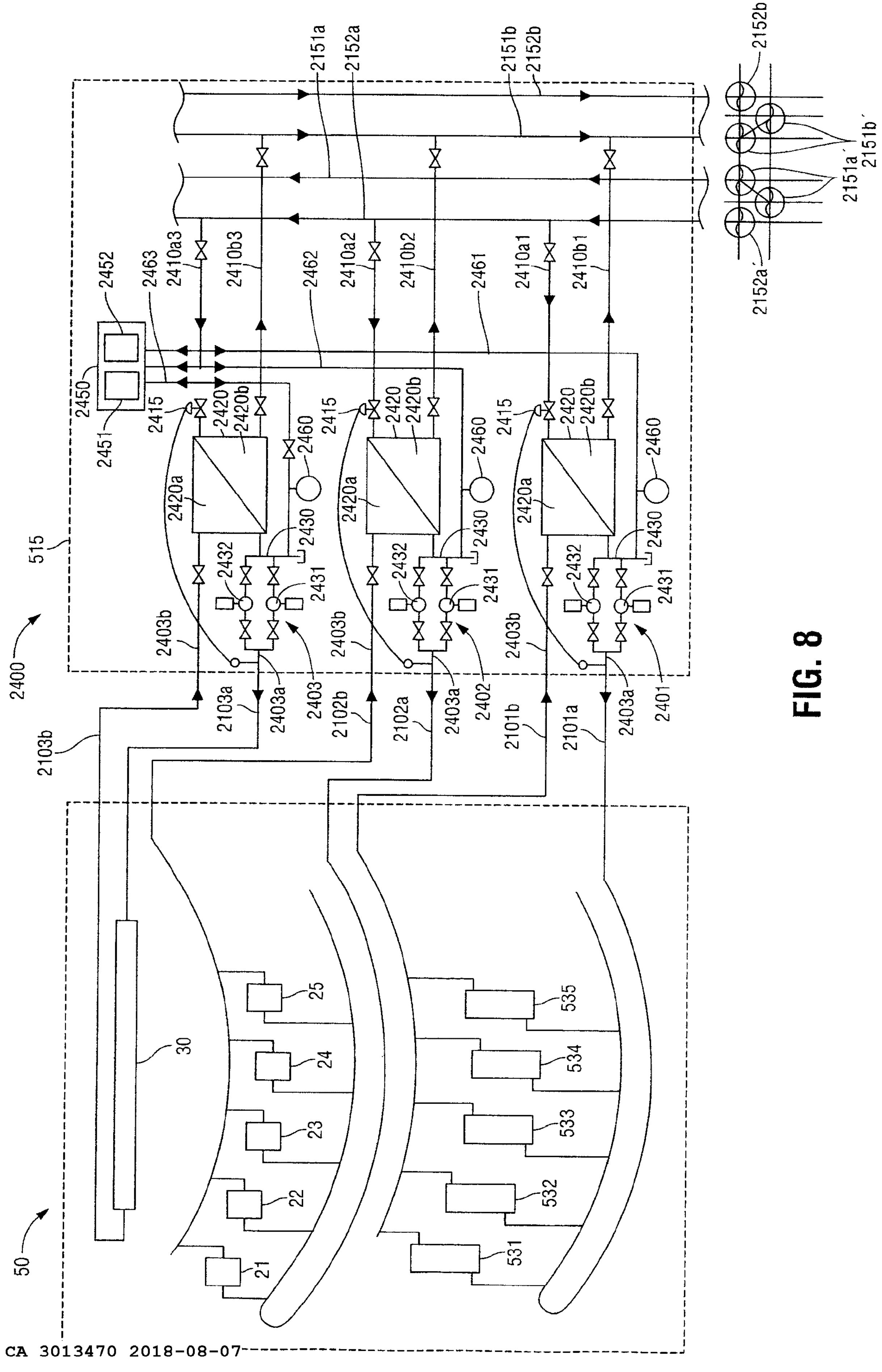
2400
515
50
30
21
22
23
24
25
531
532
533
534
535
2103b
2103a
2403a
2102b
2102a
2101b
2101a
2403
2402
2401
2403b
2431
2432
2430
2420a
2420b
2420
2415
2460
2450
2451
2452
2463
2462
2461
2410a3
2410b3
2410a2
2410b2
2410a1
2410b1
2151a
2152a
2151b
2152b
2152b´
2151b´
2151a´
2152a´

FIG. 8

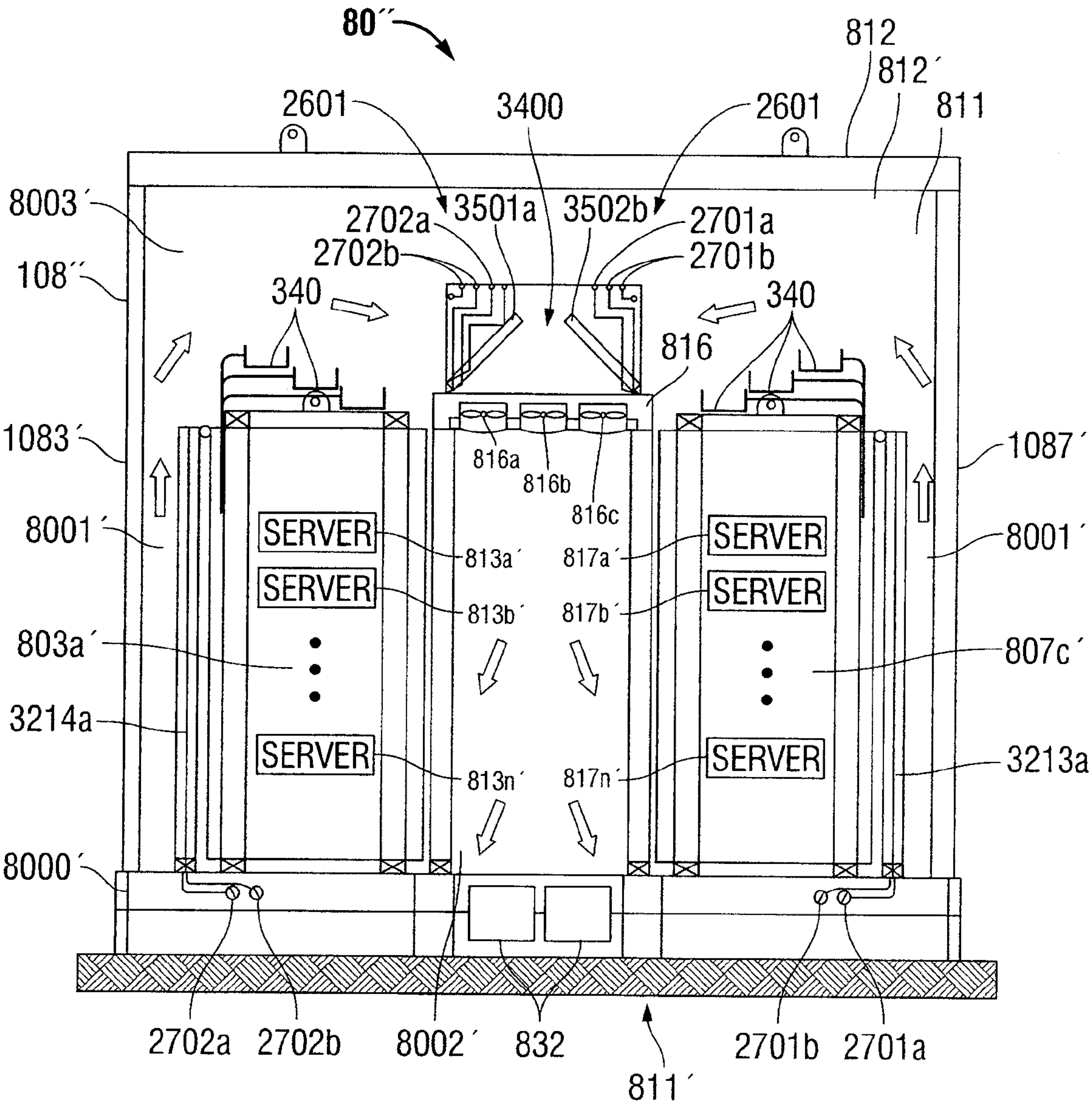
80´´
2601
3400
2601
812
812´
811
8003´
2702a
3501a
3502b
2701a
2702b
2701b
108´´
340
340
816
1083´
816a
816b
816c
1087´
8001´
SERVER
813a´
817a´
SERVER
8001´
SERVER
813b´
817b´
SERVER
803a´
807c´
3214a
SERVER
813n´
817n´
SERVER
3213a
8000´
2702a
2702b
8002´
832
2701b
2701a
811´

FIG. 9

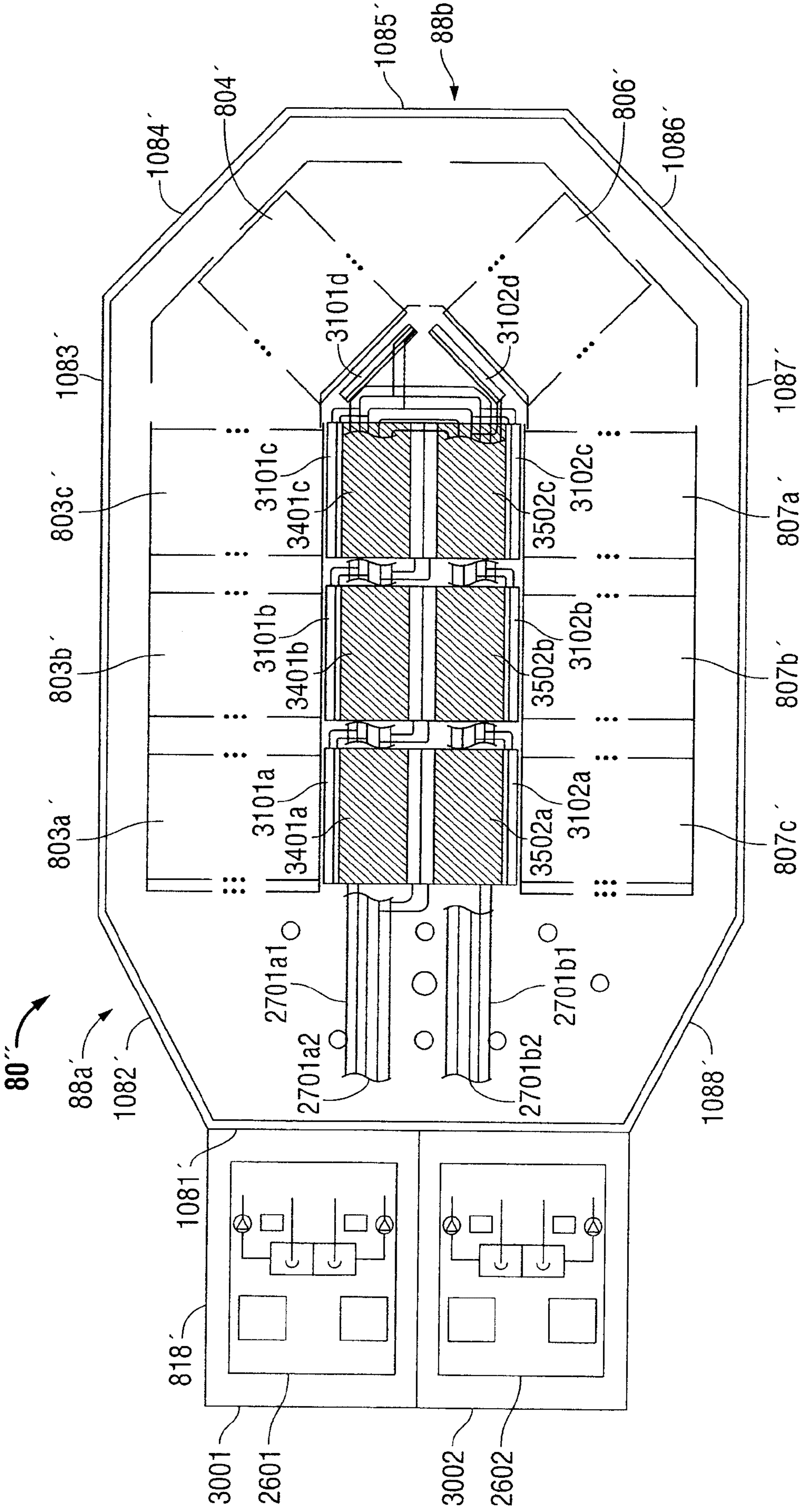
80´´
88a´
1082´
88b´
1081´
1083´
1084´
1085´
1086´
1087´
1088´
804´
806´
803a´
803b´
803c´
807a´
807b´
807c´
3101a
3101b
3101c
3101d
3102a
3102b
3102c
3102d
3401a
3401b
3401c
3502a
3502b
3502c
2701a1
2701a2
2701b1
2701b2
818´
3001
2601
3002
2602

FIG. 10

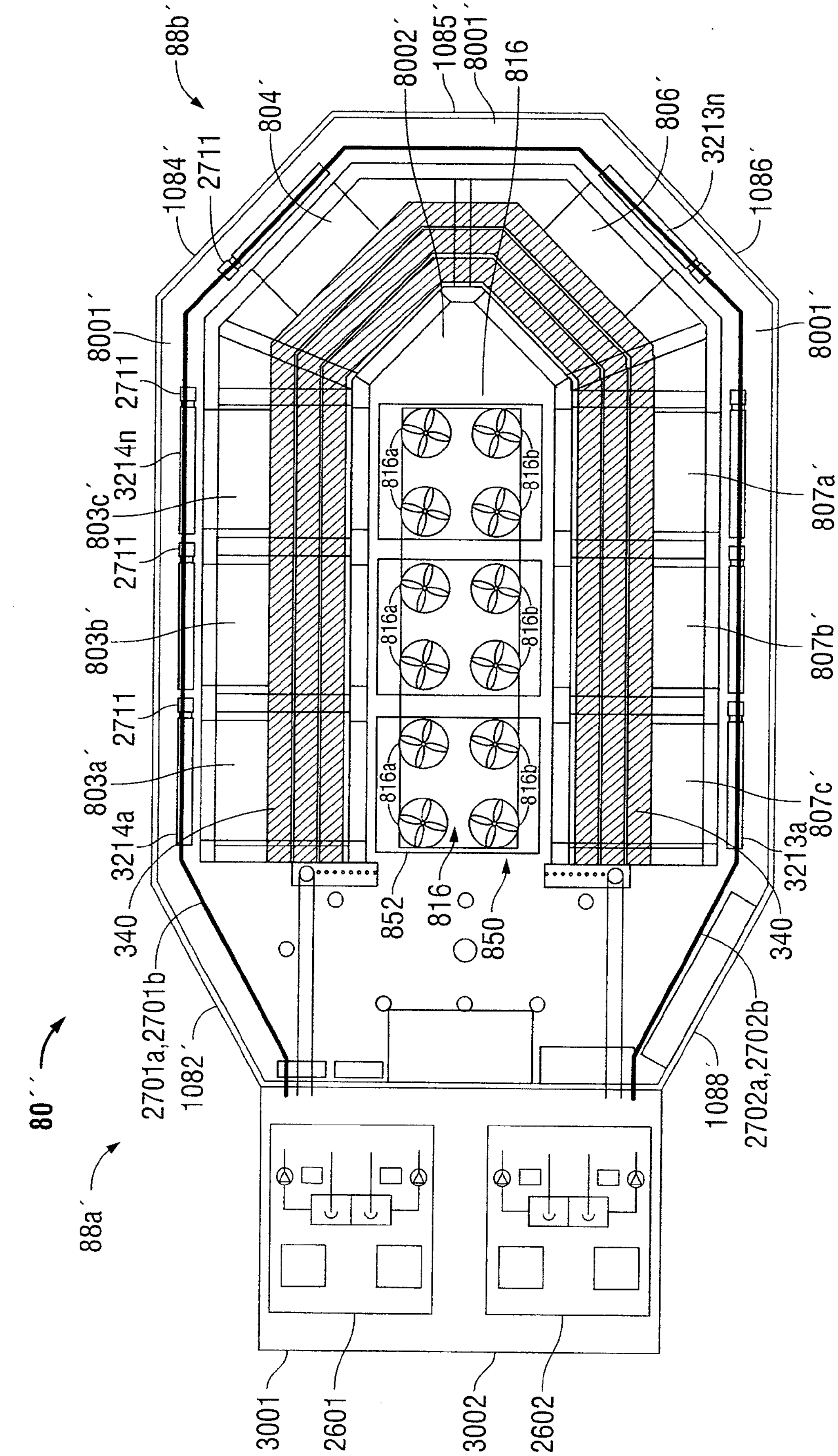
88b
8002´
1085´
8001´
816
804´
806´
3213n
1084´
2711
1086´
8001´
8001´
2711
3214n
803c´
2711
803b´
2711
803a´
3214a
340
2701a,2701b
1082´
80´´
88a´
816a
816b
816a
816b
816a
816b
807a´
807b´
807c´
3213a
340
852
816
850
1088´
2702a,2702b
3001
2601
3002
2602

FIG. 11

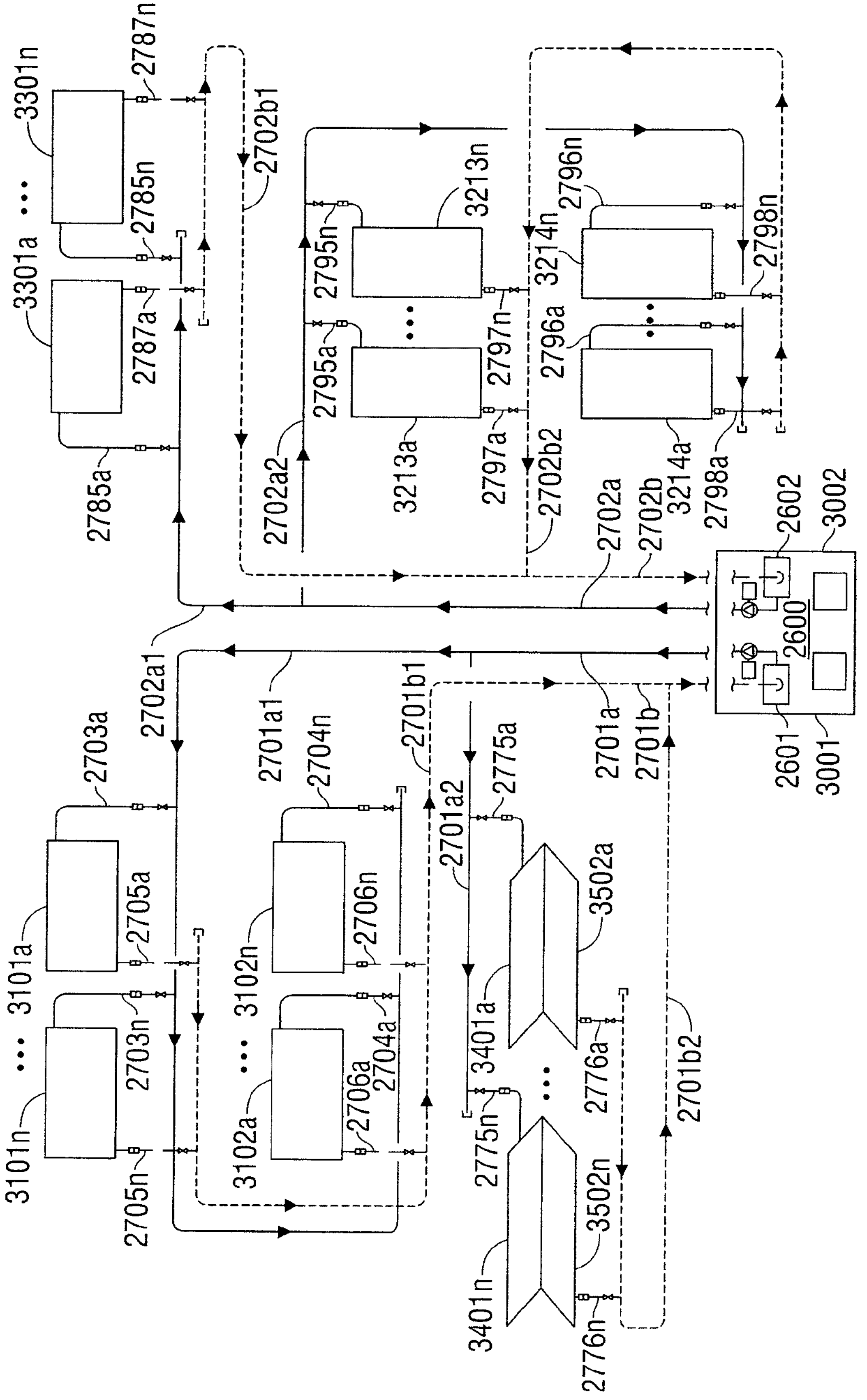
3301n
2787n
3301a
2785n
2702b1
3213n
2796n
2795n
3214n
2798n
3213a
2795a
2797n
2796a
2785a
2787a
2702a2
2797a
2702b2
3214a
2798a
2702a
2702b
2602
3002
2600
2702a1
2701a1
2701b1
2701a
2701b
2601
3001
2703a
2704n
2775a
2701a2
3101a
2705a
3102n
2706n
3502a
3401a
3101n
2703n
3102a
2706a
2704a
2776a
2701b2
2705n
2775n
3502n
3401n
2776n

FIG. 12

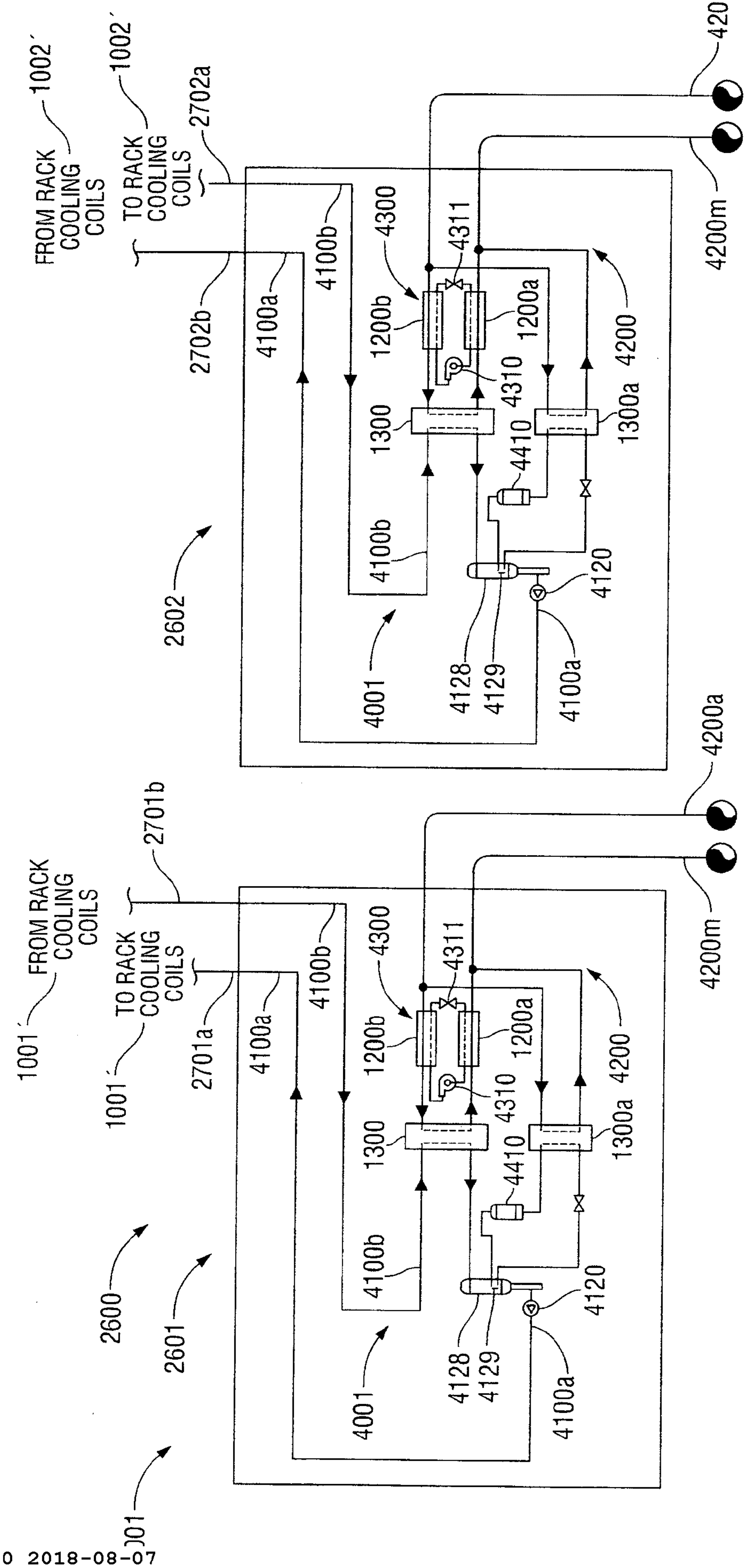
1002´
FROM RACK COOLING COILS
1002´
TO RACK COOLING COILS
2702a
2702b
4100a
4100b
4300
4311
1200b
1200a
4310
1300
1300a
4410
4200
4200a
4200m
4100b
2602
4001
4128
4129
4120
4100a
1001´
FROM RACK COOLING COILS
2701b
1001´
TO RACK COOLING COILS
2701a
4100a
4100b
4300
4311
1200b
1200a
4310
1300
1300a
4410
4200
4200a
4200m
2600
2601
4100b
4001
4128
4129
4120
4100a
1001

FIG. 13

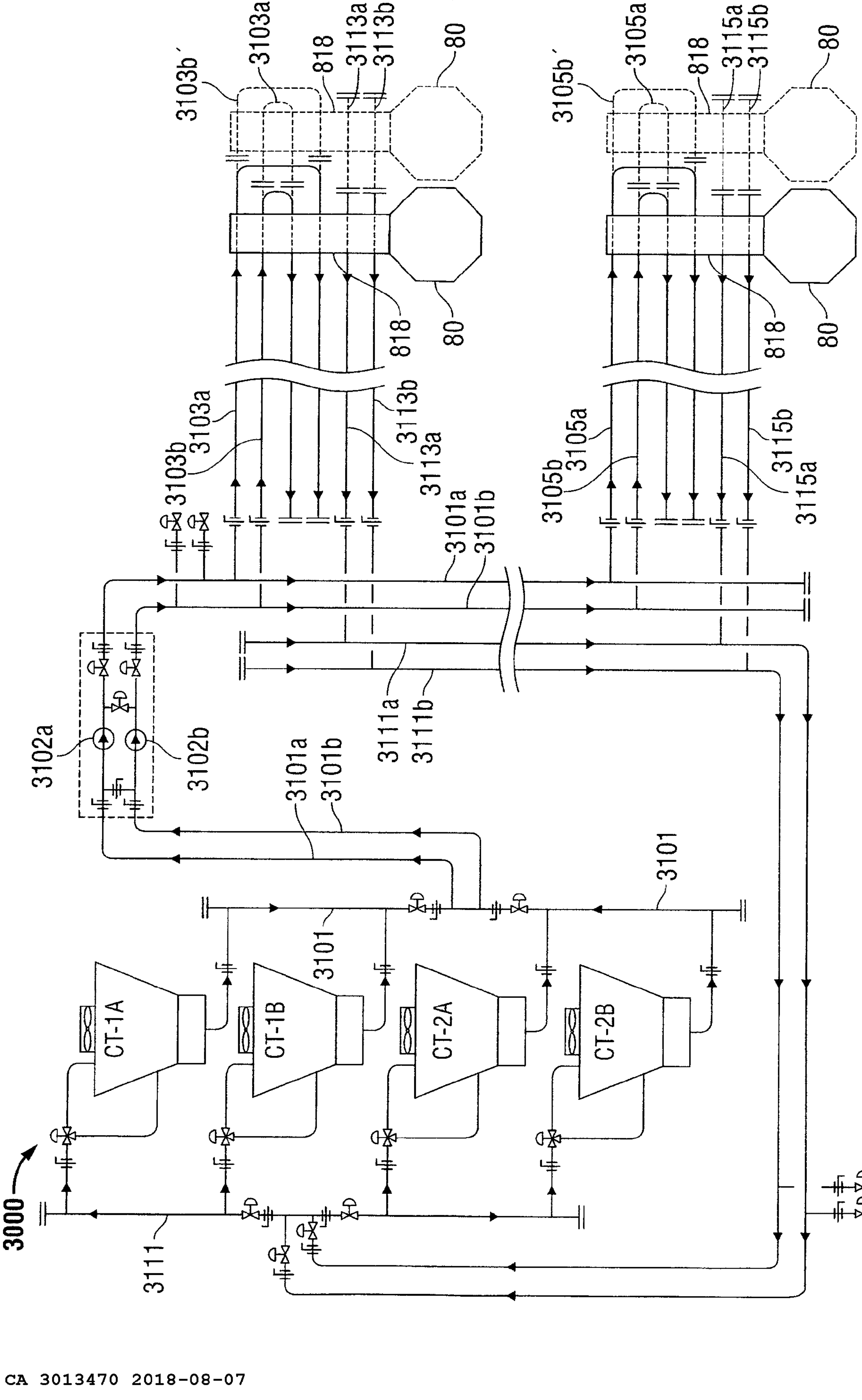
3000
3111
CT-1A
CT-1B
CT-2A
CT-2B
3101
3101
3101a
3101b
3102a
3102b
3111a
3111b
3101a
3101b
3103b
3103a
3113a
3113b
3105b
3105a
3115a
3115b
818
80
3103b´
3103a´
818
3113a´
3113b´
80
3105b´
3105a´
818
3115a´
3115b´
80
818
80

FIG. 14

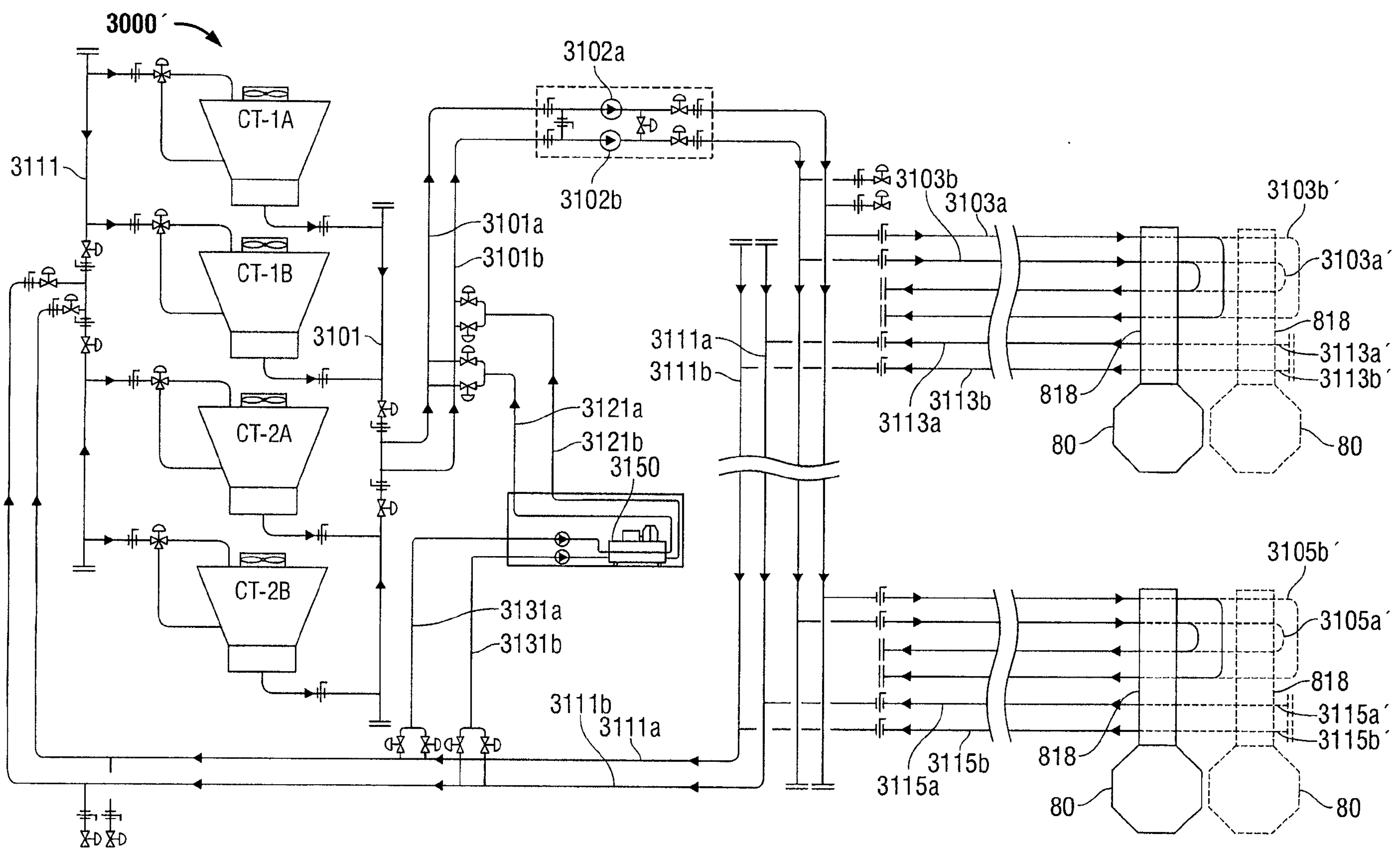
3000´
3111
CT-1A
CT-1B
CT-2A
CT-2B
3101
3102a
3102b
3101a
3101b
3121a
3121b
3150
3131a
3131b
3111a
3111b
3111b
3111a
3103b
3103a
3113a
3113b
3103b´
3103a´
818
3113a´
3113b´
818
80
80
3105b´
3105a´
818
3115a´
3115b´
3115a
3115b
818
80
80

FIG. 15

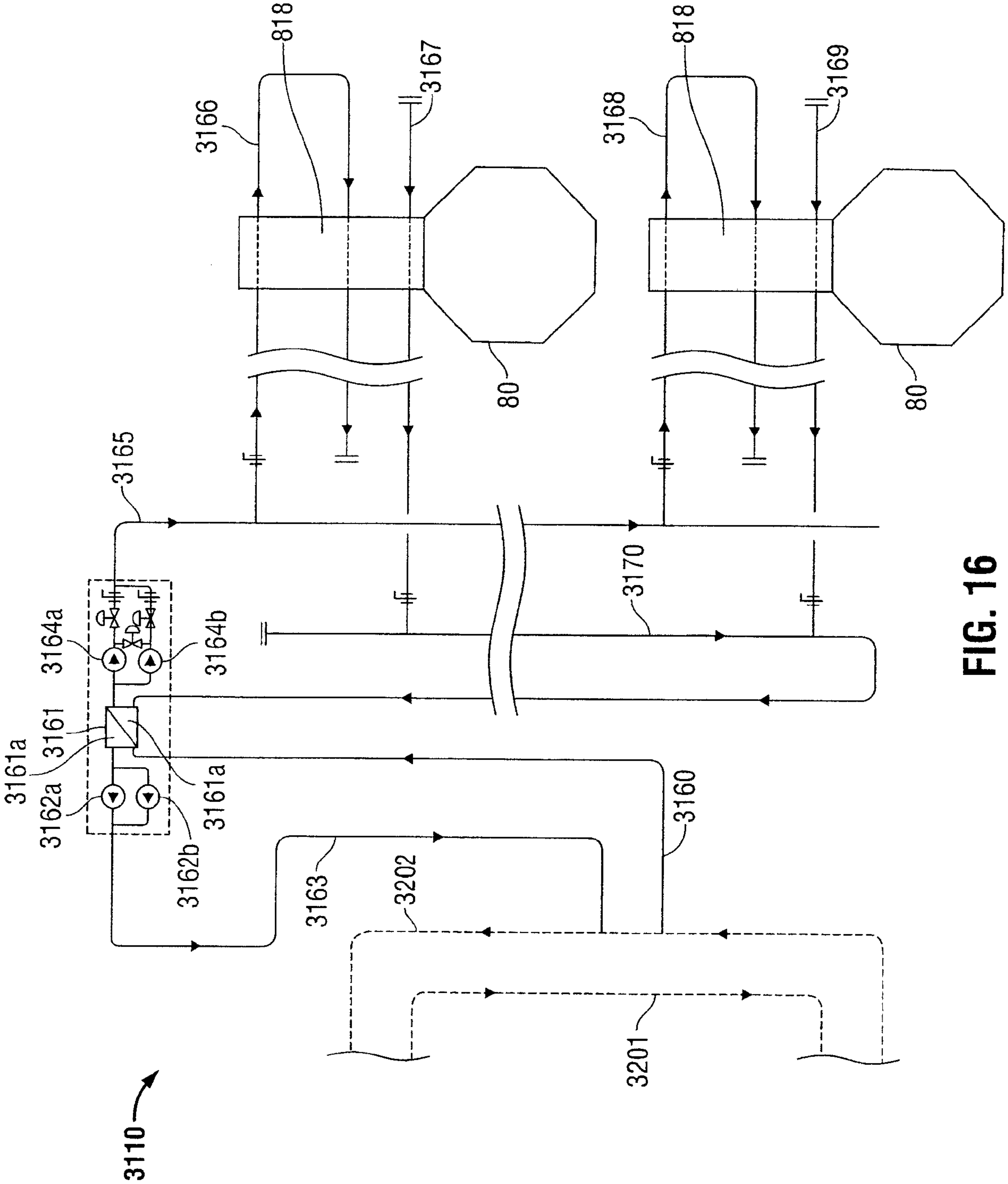
818
3166
3167
818
3168
3169
80
80
3165
3170
3164a
3164b
3161a
3161
3161a
3162a
3162b
3160
3163
3202
3201
3110

FIG. 16

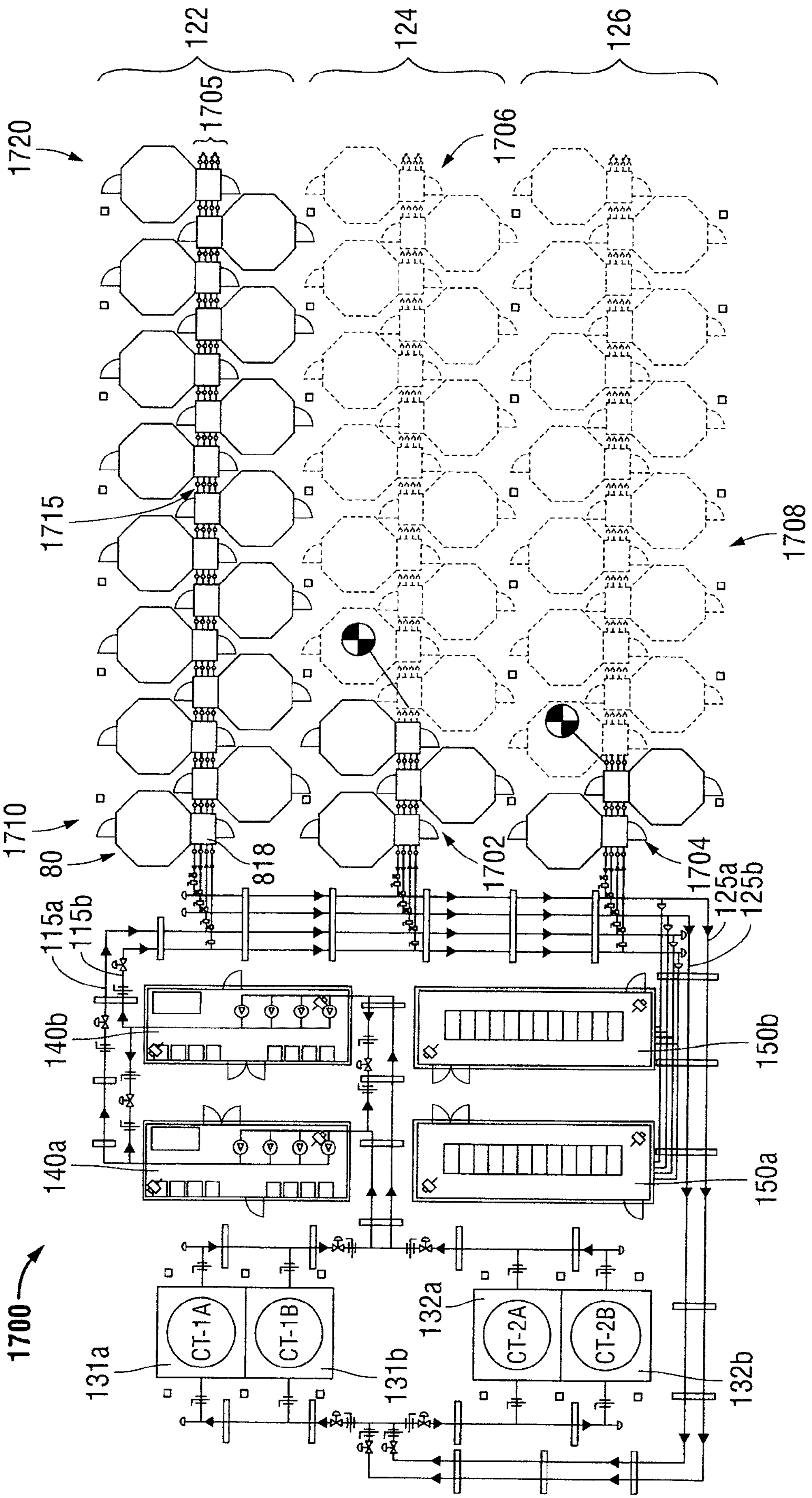
1700
122
124
126
1720
1705
1706
1715
1708
1710
80
818
1702
1704
115a
115b
125a
125b
140b
140a
150b
150a
131a
131b
132a
132b
CT-1A
CT-1B
CT-2A
CT-2B

FIG. 17

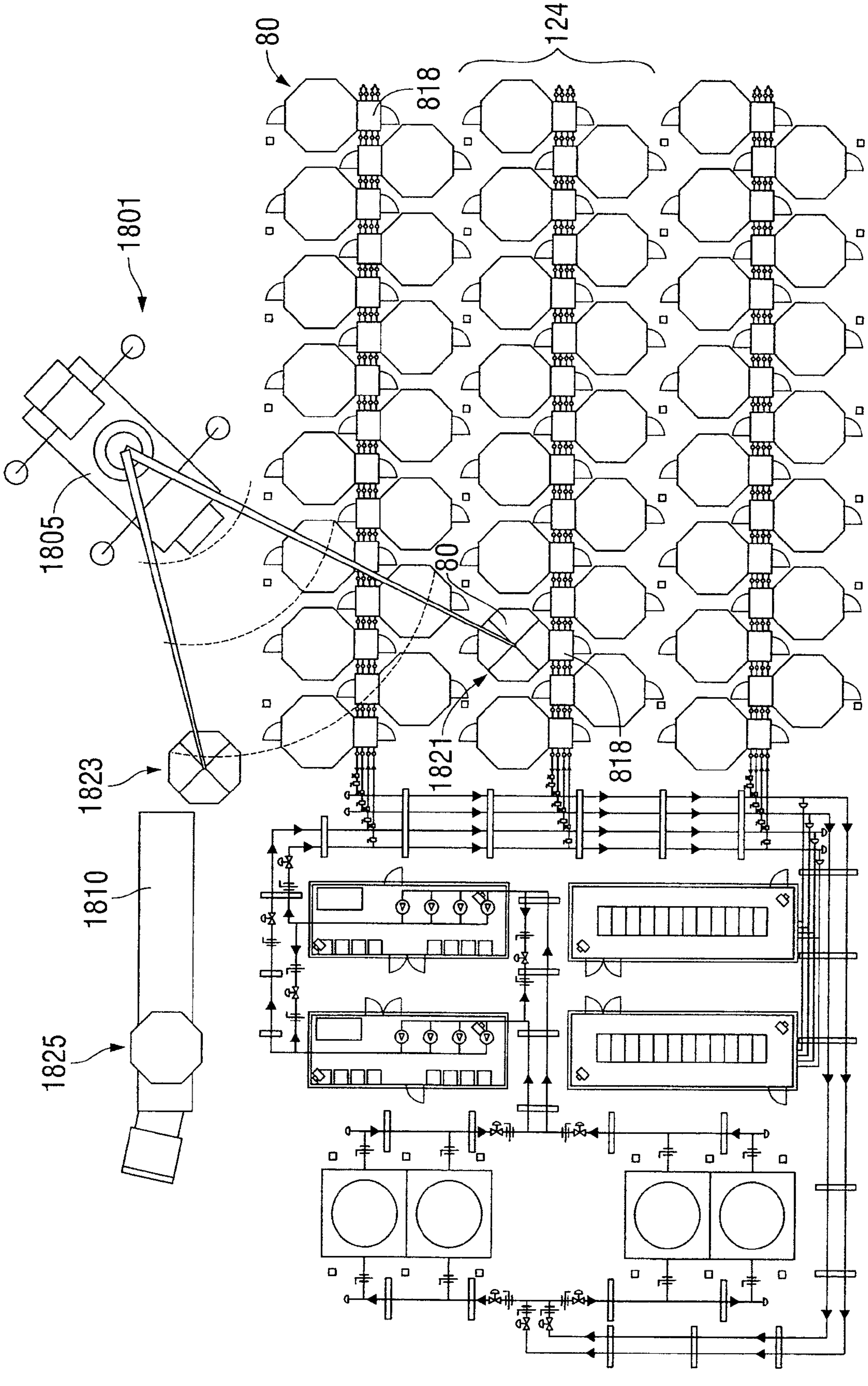

FIG. 18

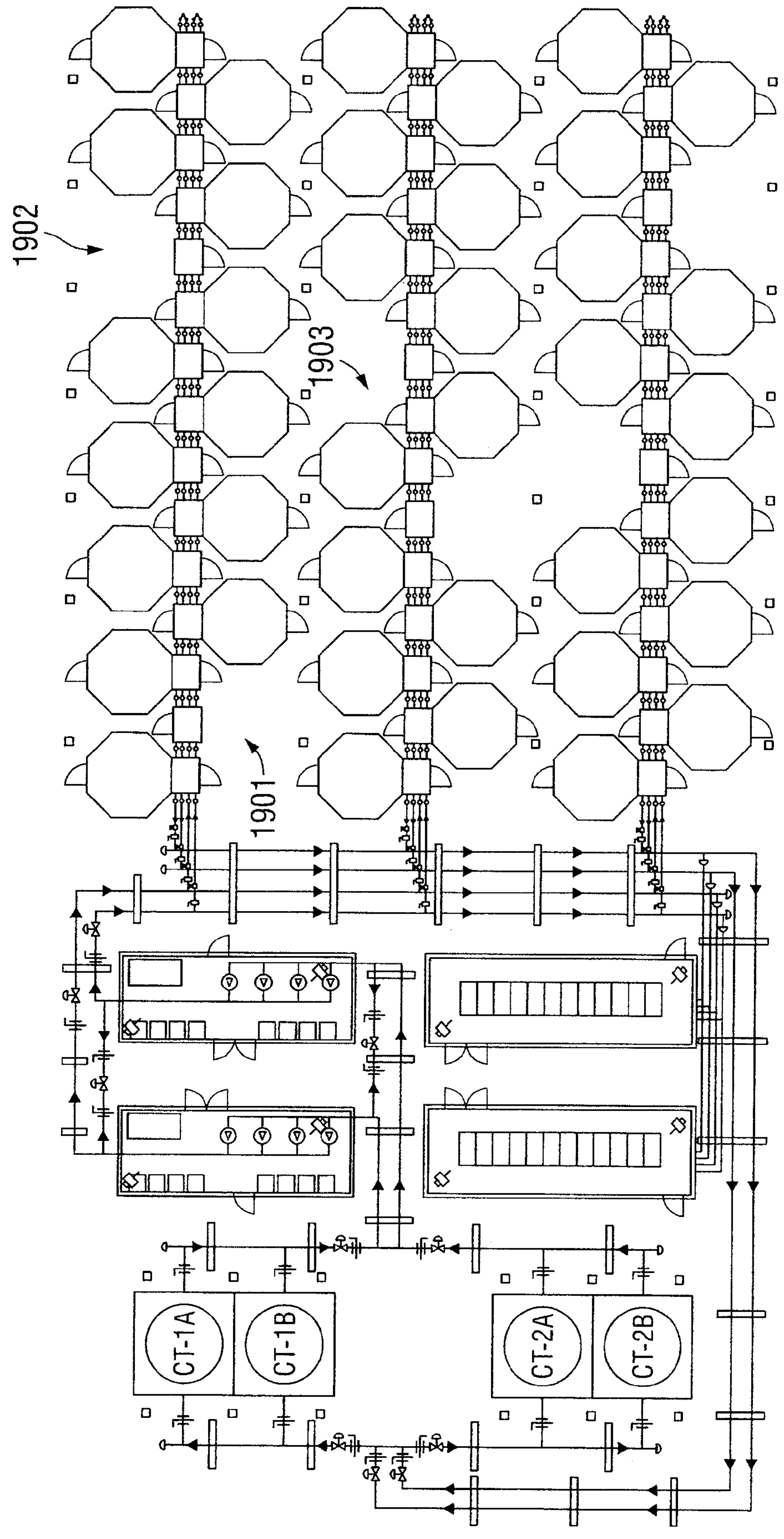

FIG. 19

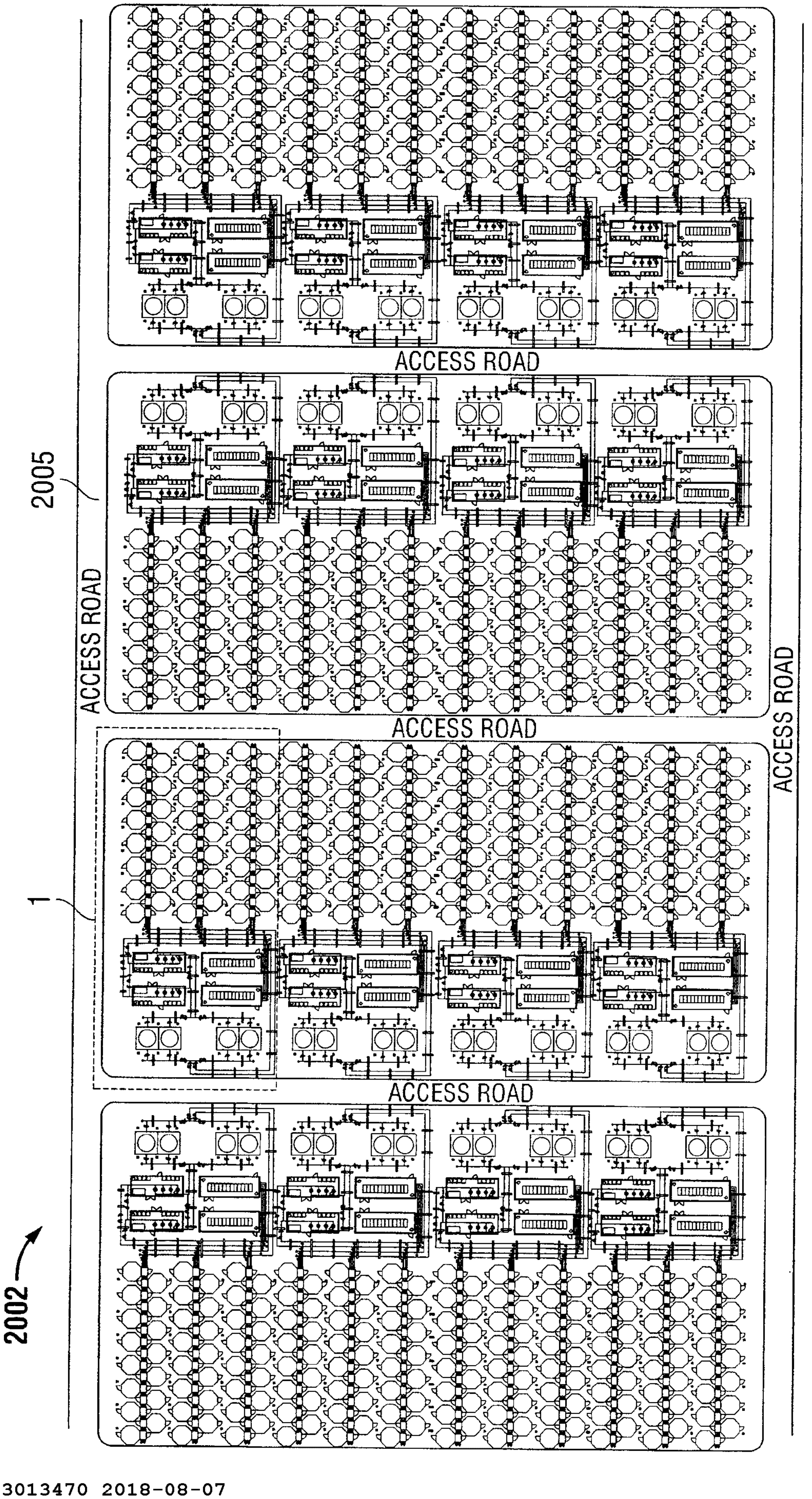
ACCESS ROAD
ACCESS ROAD
ACCESS ROAD
ACCESS ROAD
ACCESS ROAD
2005
1
2002

FIG. 20

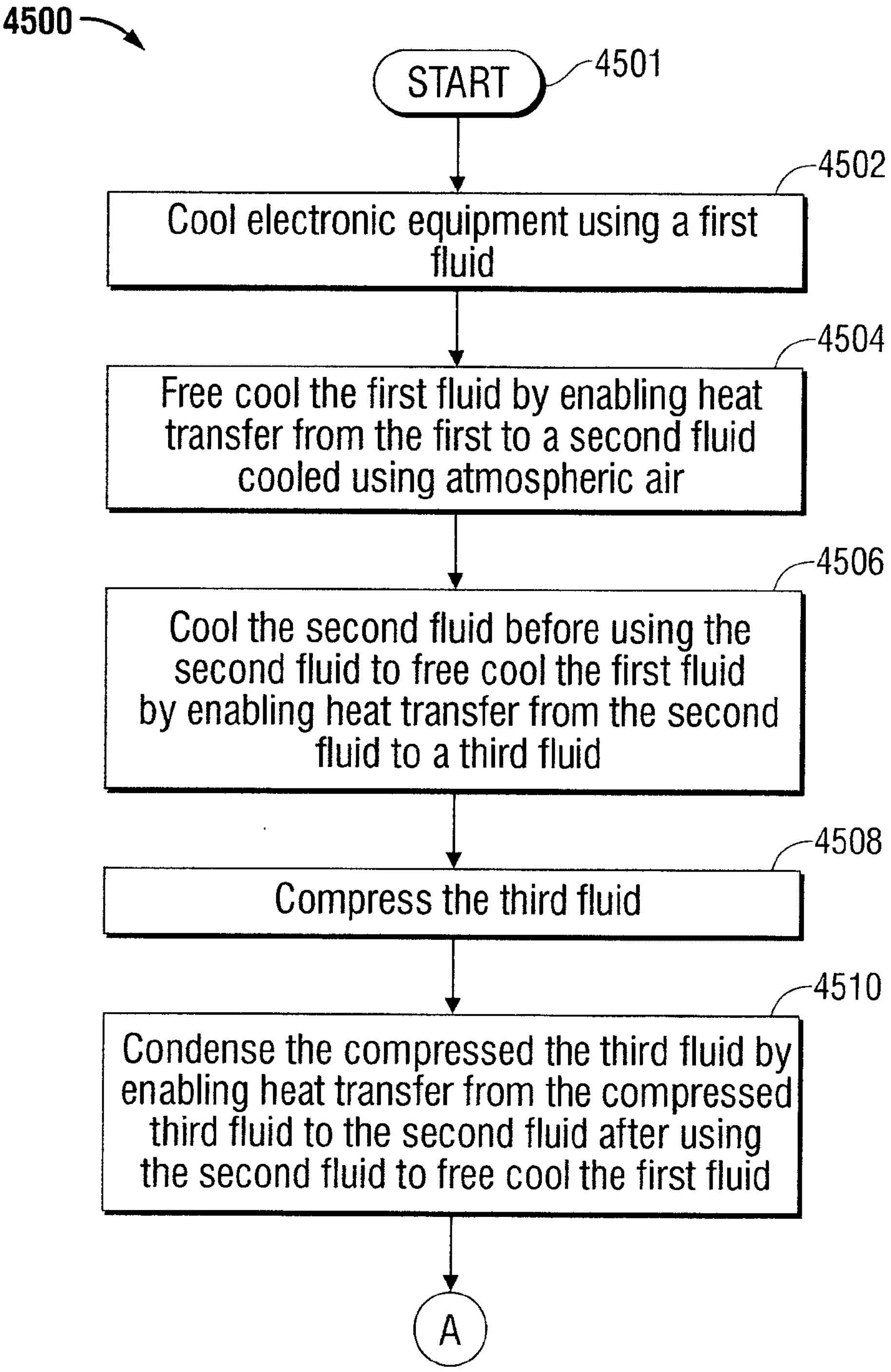
4500
START
4501
4502
Cool electronic equipment using a first fluid
4504
Free cool the first fluid by enabling heat transfer from the first to a second fluid cooled using atmospheric air
4506
Cool the second fluid before using the second fluid to free cool the first fluid by enabling heat transfer from the second fluid to a third fluid
4508
Compress the third fluid
4510
Condense the compressed the third fluid by enabling heat transfer from the compressed third fluid to the second fluid after using the second fluid to free cool the first fluid
A

FIG. 21A

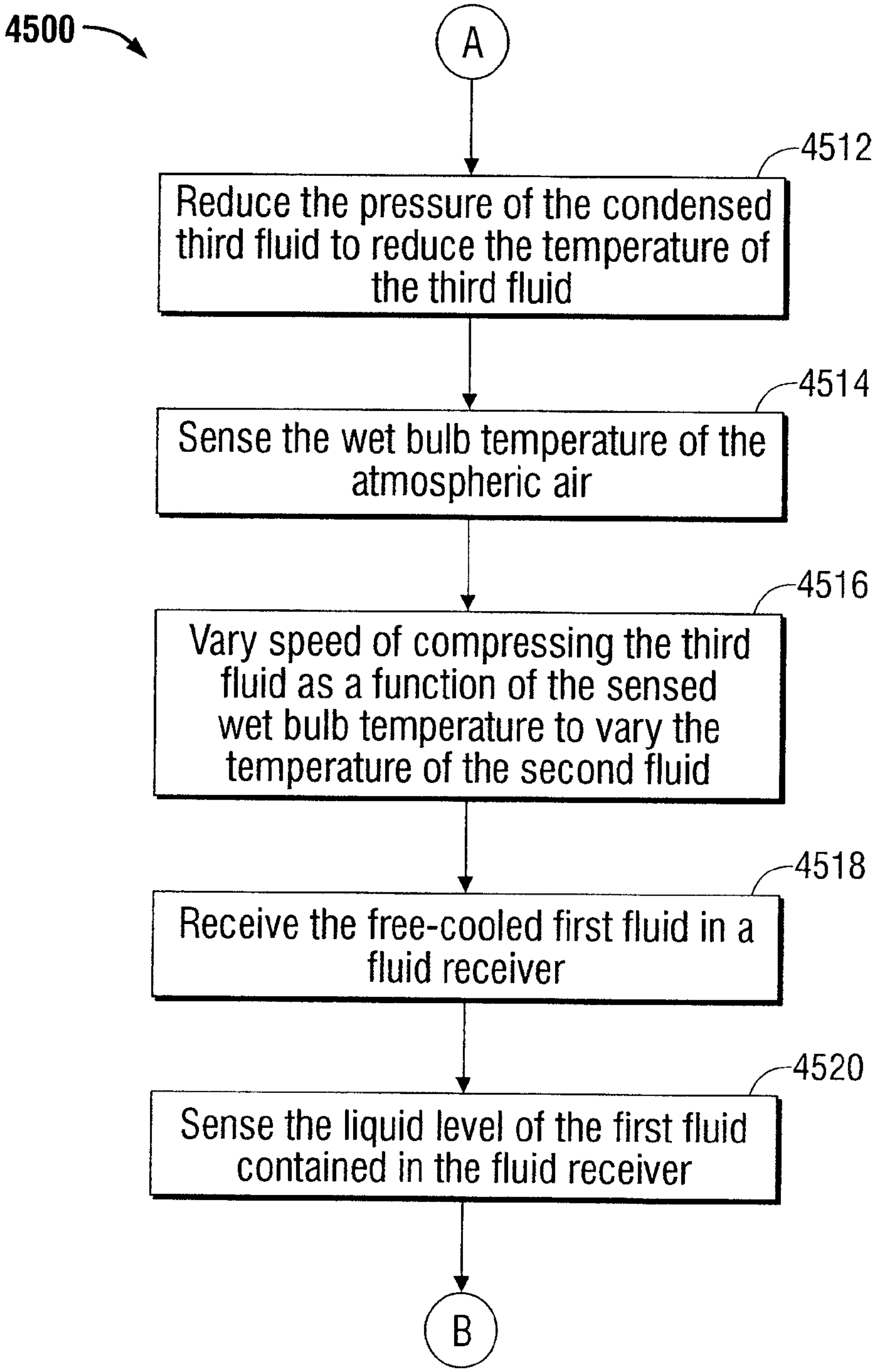
4500
A
4512
Reduce the pressure of the condensed third fluid to reduce the temperature of the third fluid
4514
Sense the wet bulb temperature of the atmospheric air
4516
Vary speed of compressing the third fluid as a function of the sensed wet bulb temperature to vary the temperature of the second fluid
4518
Receive the free-cooled first fluid in a fluid receiver
4520
Sense the liquid level of the first fluid contained in the fluid receiver
B

FIG. 21B

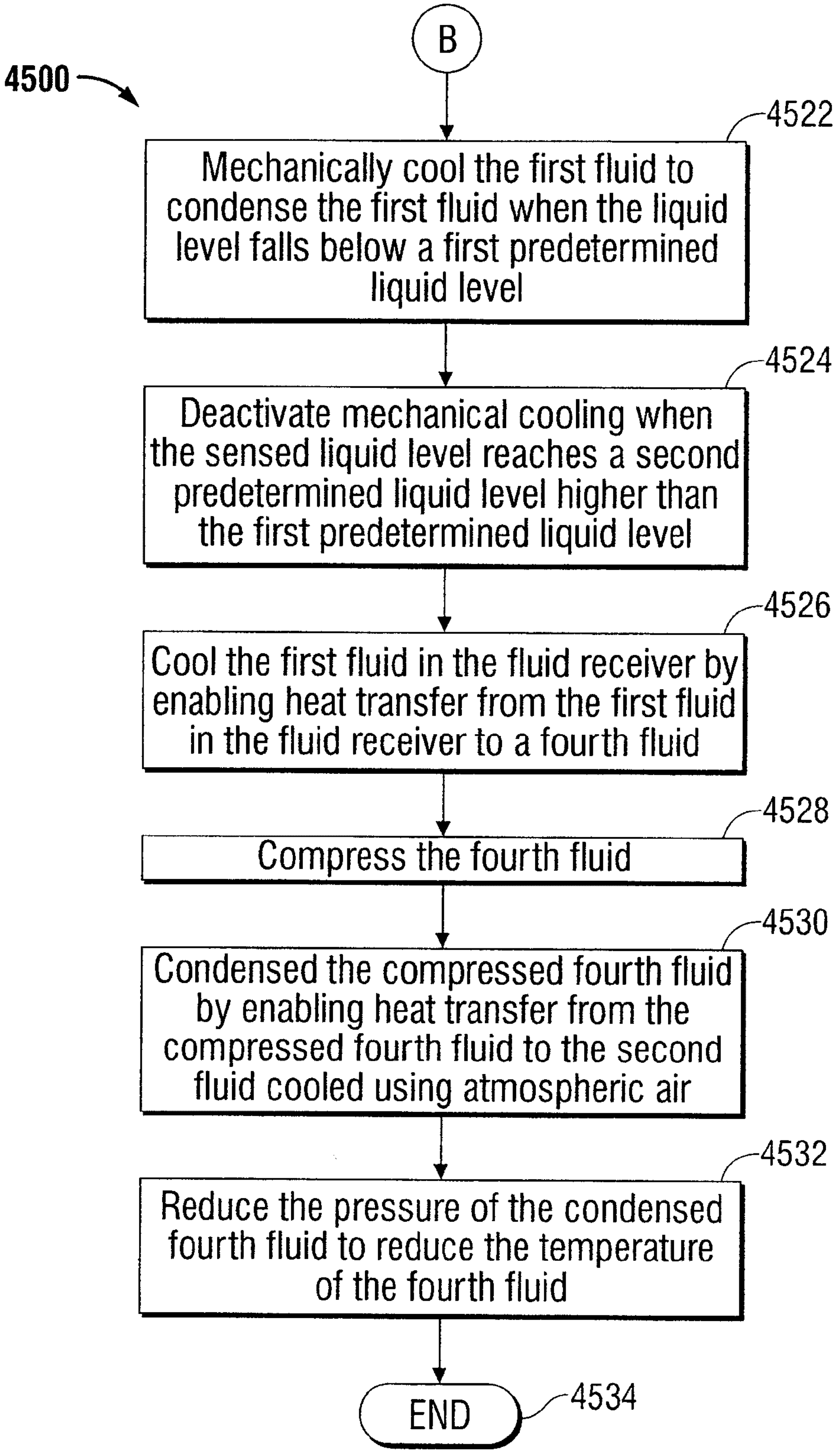
B
4500
4522
Mechanically cool the first fluid to condense the first fluid when the liquid level falls below a first predetermined liquid level
4524
Deactivate mechanical cooling when the sensed liquid level reaches a second predetermined liquid level higher than the first predetermined liquid level
4526
Cool the first fluid in the fluid receiver by enabling heat transfer from the first fluid in the fluid receiver to a fourth fluid
4528
Compress the fourth fluid
4530
Condensed the compressed fourth fluid by enabling heat transfer from the compressed fourth fluid to the second fluid cooled using atmospheric air
4532
Reduce the pressure of the condensed fourth fluid to reduce the temperature of the fourth fluid
END
4534

FIG. 21C

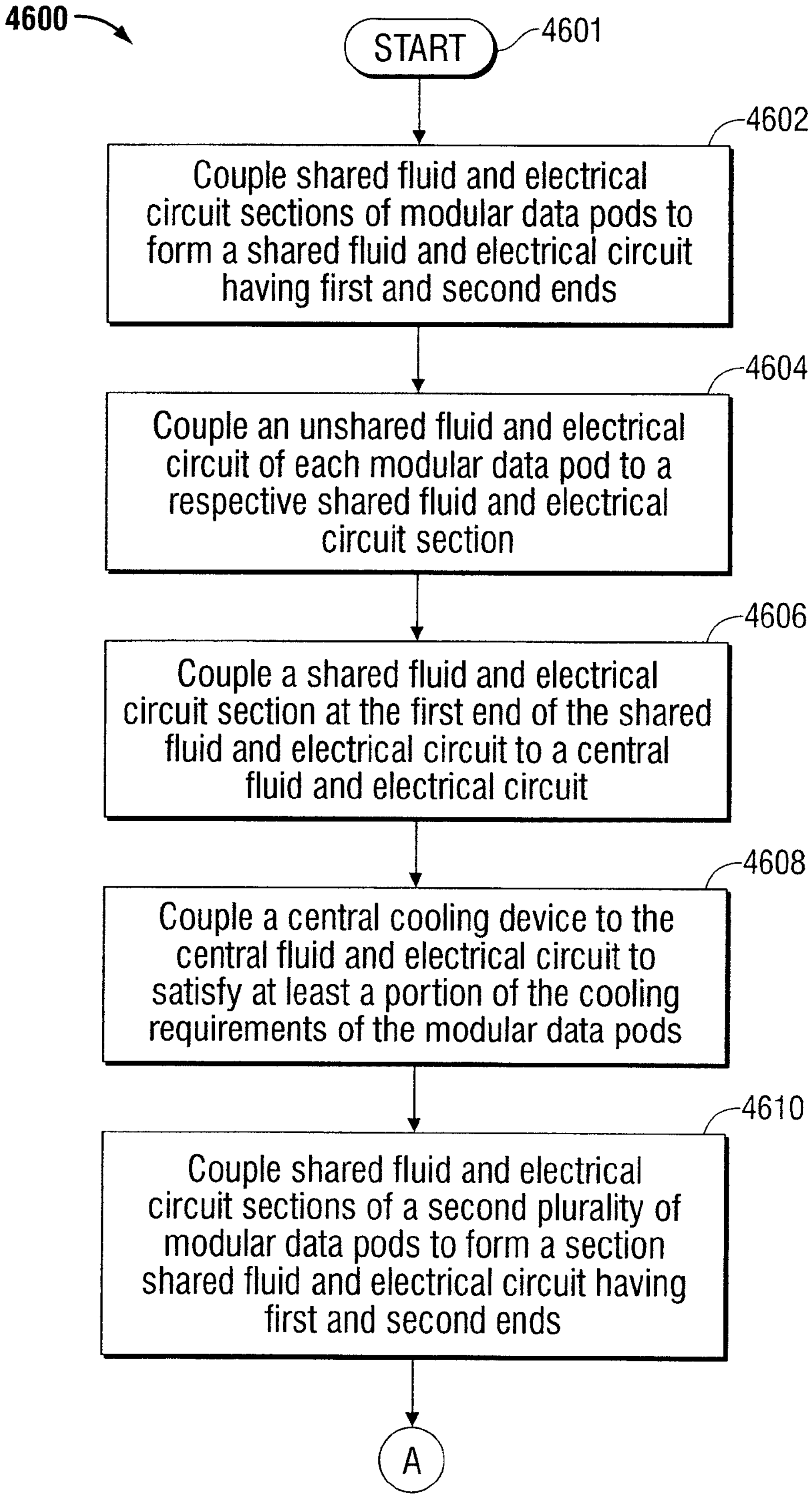
4600
START
4601
4602
Couple shared fluid and electrical circuit sections of modular data pods to form a shared fluid and electrical circuit having first and second ends
4604
Couple an unshared fluid and electrical circuit of each modular data pod to a respective shared fluid and electrical circuit section
4606
Couple a shared fluid and electrical circuit section at the first end of the shared fluid and electrical circuit to a central fluid and electrical circuit
4608
Couple a central cooling device to the central fluid and electrical circuit to satisfy at least a portion of the cooling requirements of the modular data pods
4610
Couple shared fluid and electrical circuit sections of a second plurality of modular data pods to form a section shared fluid and electrical circuit having first and second ends
A

FIG. 22A

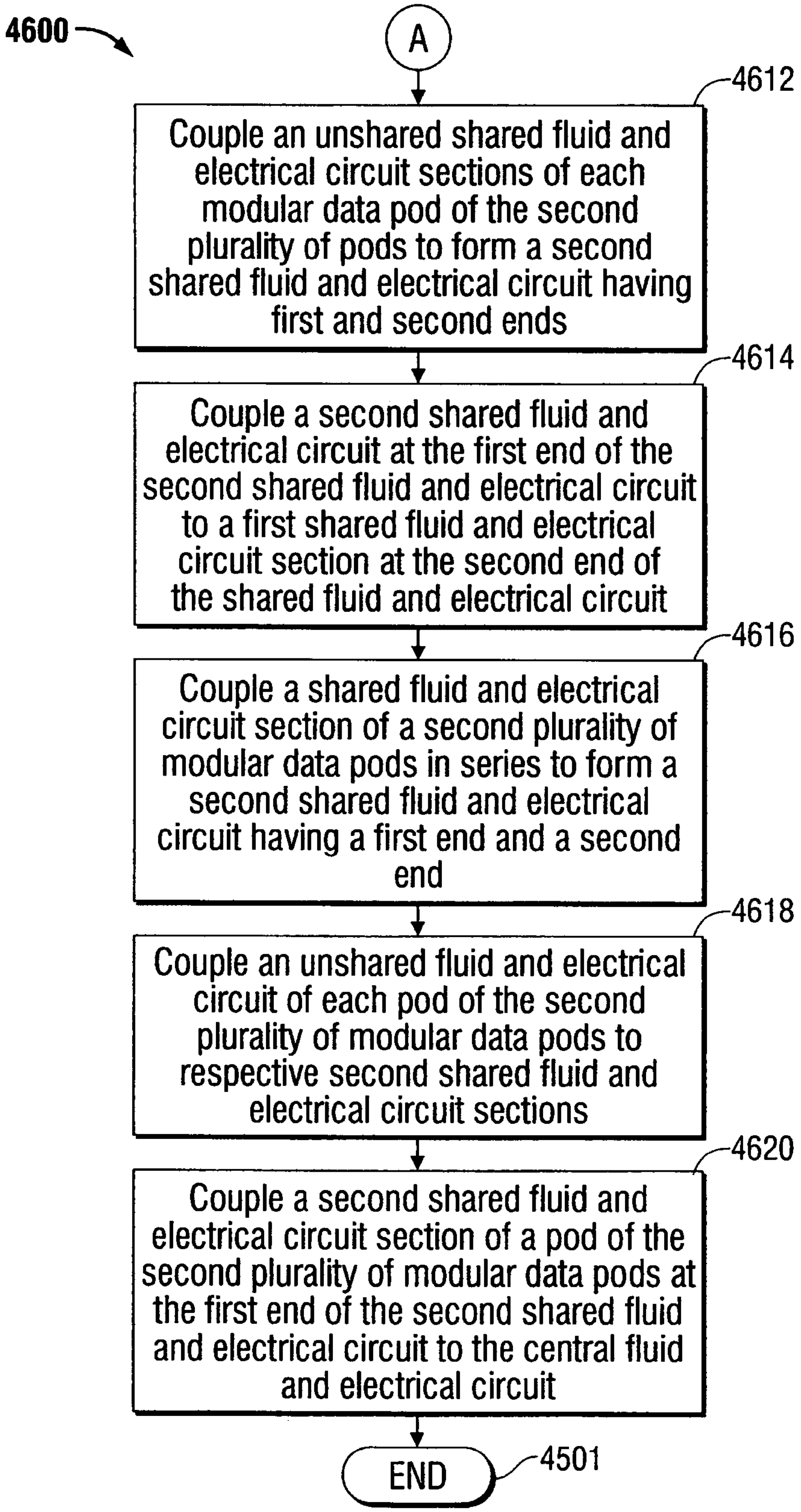
4600
A
4612
Couple an unshared shared fluid and electrical circuit sections of each modular data pod of the second plurality of pods to form a second shared fluid and electrical circuit having first and second ends
4614
Couple a second shared fluid and electrical circuit at the first end of the second shared fluid and electrical circuit to a first shared fluid and electrical circuit section at the second end of the shared fluid and electrical circuit
4616
Couple a shared fluid and electrical circuit section of a second plurality of modular data pods in series to form a second shared fluid and electrical circuit having a first end and a second end
4618
Couple an unshared fluid and electrical circuit of each pod of the second plurality of modular data pods to respective second shared fluid and electrical circuit sections
4620
Couple a second shared fluid and electrical circuit section of a pod of the second plurality of modular data pods at the first end of the second shared fluid and electrical circuit to the central fluid and electrical circuit
END
4501

FIG. 22B

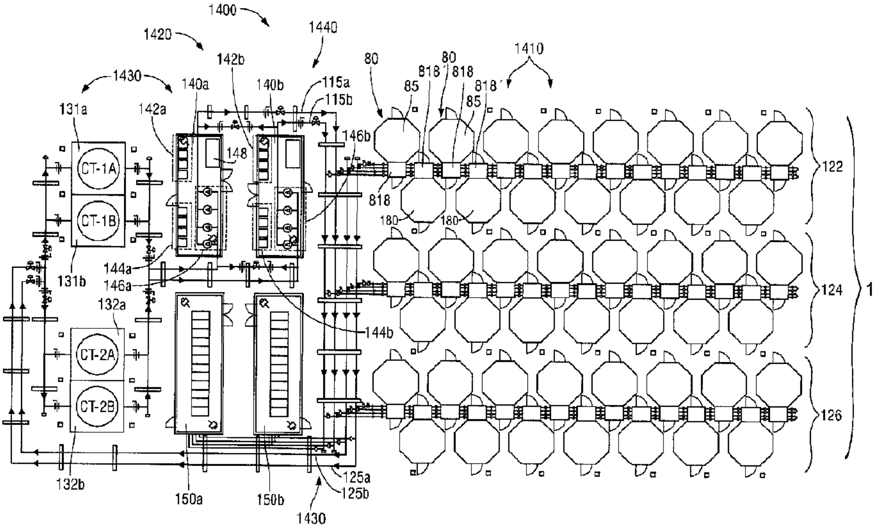
1400
1420
1440
1430
142b
1410
80
80
140a
140b
115a
115b
818
818
818′
85
85
131a
142a
148
146b
CT-1A
CT-1B
122
818
180
180
131b
144a
146a
132a
124
1
144b
CT-2A
CT-2B
126
132b
150a
150b
125a
125b
1430