No. 834,267.

PATENTED OCT. 30, 1906.

B. C. CROWLEY.

WEIR.

APPLICATION FILED NOV. 11, 1905.

Fig. 1.

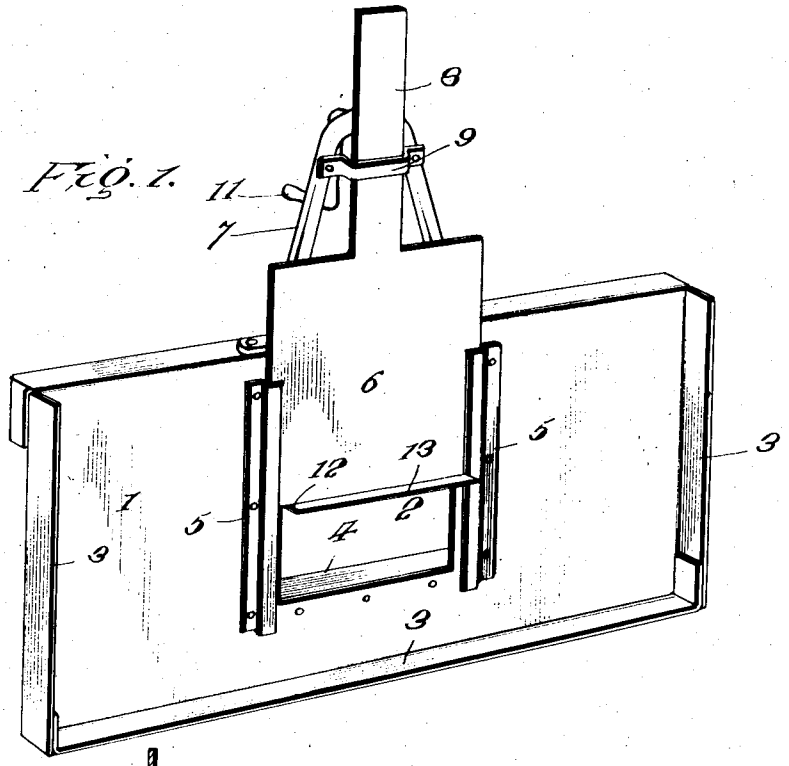

Fig. 2.

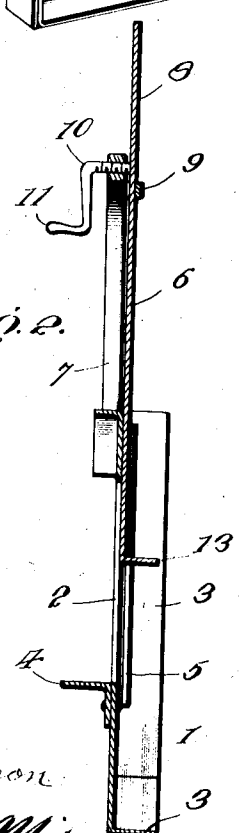

Fig. 3.

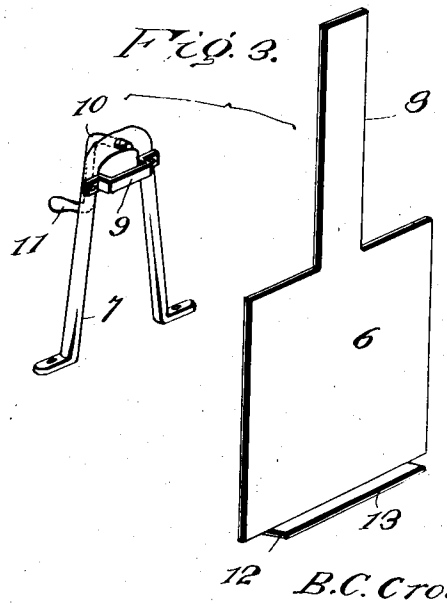

Witnesses

W. N. Woodson

[illegible]

Inventor

B. C. Crowley,

By

[illegible] Lacey, Attorneys.

UNITED STATES PATENT OFFICE.

BENJAMIN C. CROWLEY, OF IDAHO FALLS, IDAHO.

WEIR.

No. 834,267. Specification of Letters Patent. Patented Oct. 30, 1906.

Application filed November 11, 1905. Serial No. 286,907.

To all whom it may concern:

Be it known that I, BENJAMIN C. CROWLEY, a citizen of the United States, residing at Idaho Falls, in the county of Bingham and State of Idaho, have invented certain new and useful Improvements in Weirs, of which the following is a specification.

This invention relates to certain improvements in weirs or dams of that type which are commonly employed for irrigation purposes, and has for its object to provide a device of this character which is extremely light in construction and can accordingly be readily placed into or removed from position, which is so designed as to prevent any leakage of the water around the edges thereof, and which is provided with means whereby the water-gate can be securely clamped in any desired position.

For a full description of the invention and the merits thereof and also to acquire a knowledge of the details of construction of the means for effecting the result reference is to be had to the following description and accompanying drawings, in which—

Figure 1 is a perspective view of my device looking toward the upstream side and showing the water-gate in a raised position. Fig. 2 is a vertical sectional view through same. Fig. 3 is a detail perspective view of the gate and the upright member, the clamping device being shown upon the latter.

Corresponding and like parts are referred to in the following description and indicated in all the views of the drawings by the same reference characters.

This device is intended to be constructed of sheet metal of any suitable gage, which is galvanized or otherwise formed so as to resist the corrosion caused by the water.

The numeral 1 designates the weir proper, which is provided with an outlet-opening or spillway 2 and is of a sufficient size so that the edges thereof can be embedded in the banks of the irrigating-ditch, so as to take a secure hold thereupon and prevent any leakage. The sides and bottom of the member 1 are bent outwardly toward the upstream side to form flanges 3, which serve as a reinforcing means and also serve as a safeguard against the leakage of the water around the sides of or below the weir. It will also be apparent that these transverse flanges 3 prevent any lateral movement of the weir which would otherwise be likely to take place, owing to the fact that it is constructed of sheet metal and is accordingly very thin. A flange 4 projects outwardly from the rear toward the downstream side and is located immediately below the outlet 2. This serves as an apron to prevent the water from washing away the dirt and undermining the entire device. Guideways 5 are located upon each side of the outlet 2, and the gate 6 operates therein.

In order to clamp the gate at any desired height, a locking mechanism is employed which is located upon a U-shaped standard or upright 7. This standard 7 is secured in position by bending the lower extremities of its arms outward and securing them by any suitable means to a ledge formed by bending the upper edge of the weir toward the downstream side. The gate-post 8, which is preferably formed of some spring material, passes through a keeper 9, connecting the arms of the U-shaped standard 7 near the upper ends thereof. A clamping-screw 10, provided with an operating-crank 11, passes through a threaded opening in the standard 7 and engages with the gate-post 8. It will be observed that this clamping-screw is located slightly above the keeper 9, and when the gate-post is made of spring metal this enables a secure clamping action to be obtained, owing to the elasticity of the gate-post.

In the operation of the device it will be evident that the gate 6 can be readily clamped in any desired position according to whether or not it is desired to raise the level of the water for irrigating purposes. Owing to the formation of the weir with the flanges 3, it will be enabled to take a secure hold upon the banks of the ditch, and any leakage of the water will be prevented.

In order to reinforce the lower edge of the gate against bending outwardly when the gate is being raised or lowered, notches 12 are cut in the lower corners thereof and the resultant portion bent outwardly at approximately right angles to form the reinforcing flange or rib 13. This rib prevents the pressure of the water from bending the edge of the gate, which would cause it to engage with the outlet-opening and prevent the latter from being properly closed.

Having thus described the invention, what is claimed as new is—

1. The combination of a weir, a water-

gate, a gate-post, a standard projecting upwardly from the weir, a keeper secured to the upright member and serving as a guideway for the gate-post, and means for clamping the gate-post against the keeper.

2. The combination of a gate-post, a U-shaped standard, a keeper connecting the opposite arms of the U-shaped standard and serving as a guide for the gate-post, and means for clamping the gate-post against the keeper.

3. The combination of a gate-post, a U-shaped standard, a keeper connecting the opposite arms of the U-shaped standard and serving as a guide for the gate-post, said keeper being located toward the upper portion of the standard, and a clamping member operating in the transverse portion of the standard and adapted to force the gate-post into engagement with the keeper.

4. The combination of a weir, transverse flanges around the edges thereof which are adapted to be embedded in the bank of the stream, a water-gate and gate-post, a U-shaped standard projecting from the weir, a keeper connecting the opposite arms of the U-shaped standard and serving as a guide for the gate-post and means for clamping the gate-post against the keeper.

In testimony whereof I affix my signature in presence of two witnesses.

BENJAMIN C. CROWLEY. [L. S.]

Witnesses:
S. G. CROWLEY,
WILLIAM EICKMEIER.