Aug. 22, 1933. W. F. BAIRD 1,923,472

REFRIGERATING APPARATUS

Filed Dec. 6, 1929 2 Sheets-Sheet 1

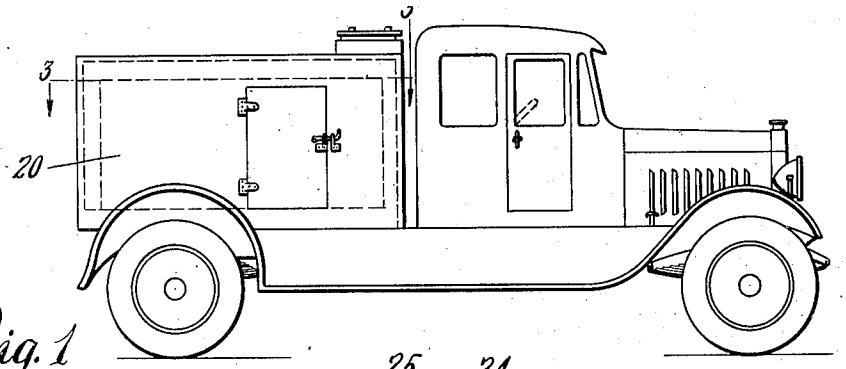

Fig. 1

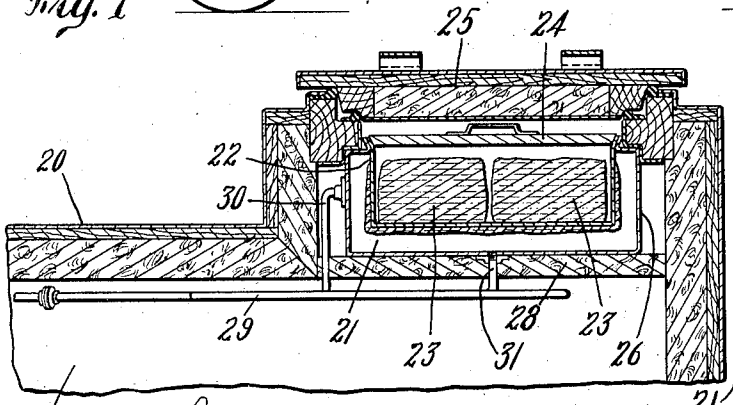

Fig. 2

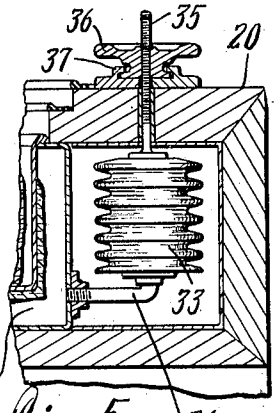

Fig. 5

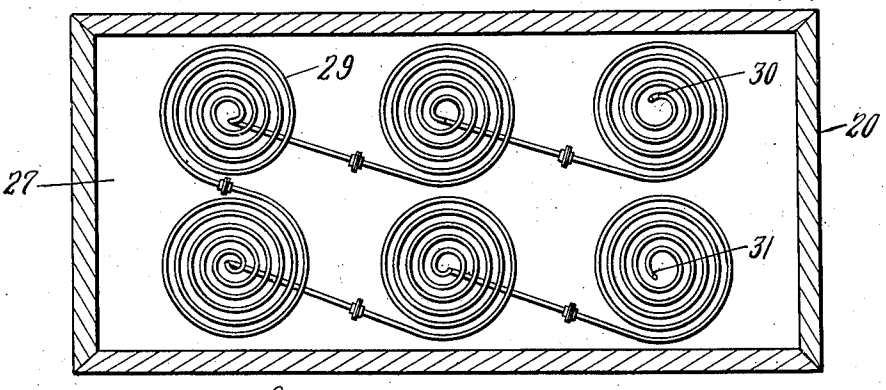

Fig. 3

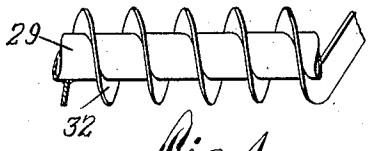

Fig. 4

Inventor:
William F. Baird.
by
Wright Brown Quinby & May
Attys.

Aug. 22, 1933. W. F. BAIRD 1,923,472

REFRIGERATING APPARATUS

Filed Dec. 6, 1929 2 Sheets-Sheet 2

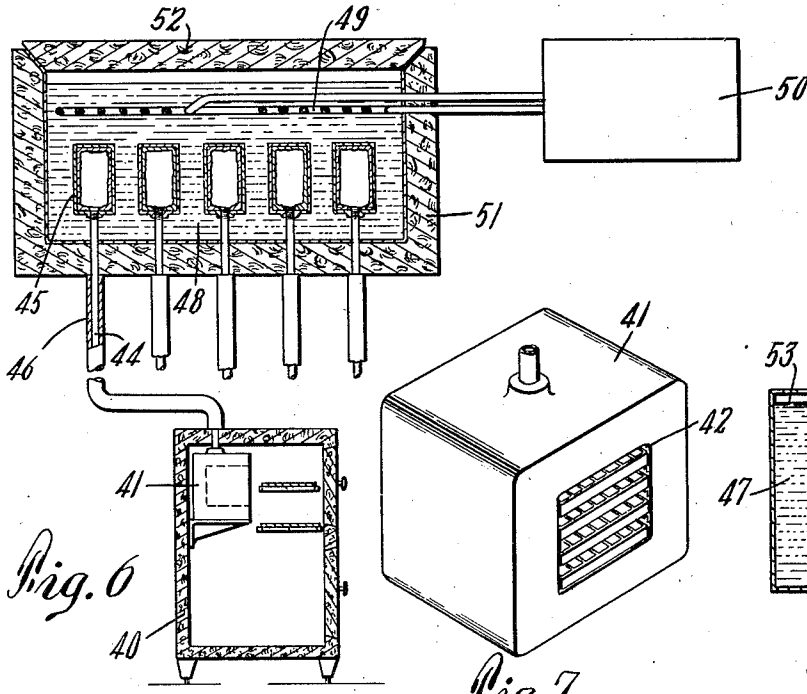

Fig. 6

Fig. 7

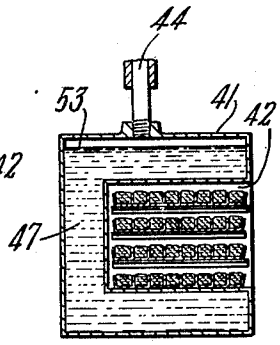

Fig. 8

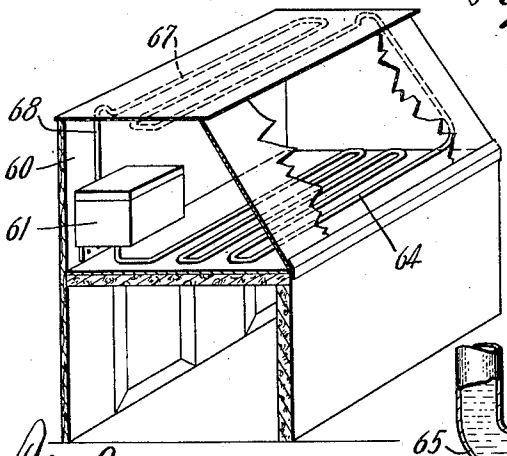

Fig. 9

Fig. 11

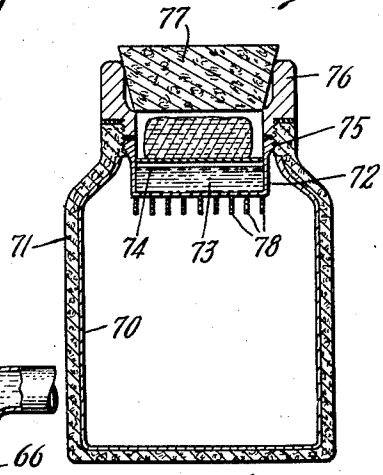

Fig. 12

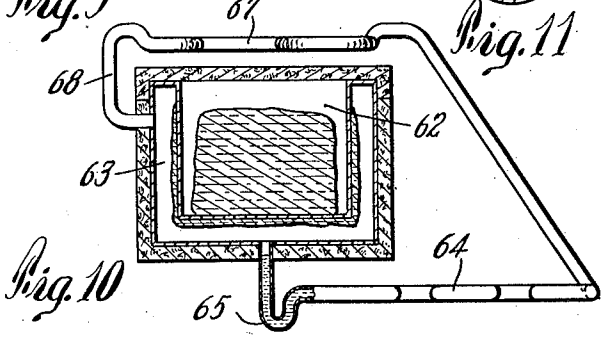

Fig. 10

Inventor:
William F. Baird.
by
Wright Brown Quinby & May
Atty's.

Patented Aug. 22, 1933 1,923,472

UNITED STATES PATENT OFFICE

1,923,472

REFRIGERATING APPARATUS

William F. Baird, Winchester, Mass.

Application December 6, 1929. Serial No. 412,247

11 Claims. (Cl. 62—91.5)

This invention relates to apparatus for controlling the refrigerating effect of a primary refrigerant which has a temperature considerably below the range suitable for the articles to be refrigerated. Well known examples of such refrigerants are liquid air and solid carbon dioxide. The use of the latter has become extensive in spite of difficulties which have been encountered in controlling its refrigerating effect. Perishable foodstuffs must be kept within definite ranges of temperature to minimize deterioration. Ice-cream, for example, should not be frozen too hard nor allowed to become soft. If its temperature becomes too low, the flavor is unfavorably affected. If allowed to soften, then chilled again, the texture is spoiled by the formation of crystals. Heretofore considerable difficulty has been experienced with solid carbon dioxide due to excessive chilling of the contents of a refrigerator when a large block of the refrigerant is introduced, followed by an undesirably high temperature when the refrigerating effect abates as the size of the block of refrigerant shrinks. The uncontrolled use of a low-temperature refrigerant is also wasteful, as the excessive initial chilling of the refrigerator cabinet creates an excessive temperature gradient through the walls of the cabinet, inducing an excessive flow of heat into the cabinet to use up the refrigerant. These undesirable results are avoided, according to the present invention, by isolating the refrigerant partly or wholly from the interior of the cabinet to be refrigerated, and providing means for transferring heat from the cabinet to the refrigerant, which will operate efficiently when the cabinet is above a predetermined critical temperature, and inefficiently when the cabinet is below such temperature.

In carrying out the invention, a receptacle may be provided for the refrigerant, and a gas-tight system for the heat-transferring substance, a portion of the system having a metal wall of high heat conductivity exposed directly to contact with the refrigerant, another portion of the system being exposed to the interior of the refrigerator cabinet to absorb heat therefrom efficiently. Within the gas-tight system is a quantity of suitable volatile liquid having a boiling point at low pressures somewhat below the temperature desired for the cabinet. The apparatus is arranged so that the liquid is contained in the portion of the system which is exposed to the interior of the cabinet, this portion being normally warmer than the cold portion directly exposed to the refrigerant. Before sealing off the system, it is partially exhausted so that the partial pressure of the remaining air is considerably below atmospheric. When the apparatus is in operation, the vapor of the liquid in the immediate vicinity of the cold surface is condensed thereby. If the system is in equilibrium, the partial pressure and hence the density of the vapor is low so that the rate of condensation is slow, and the body of liquid in the system is below its boiling point. The condensed vapor is thus replaced by evaporation from the surface of the liquid, this evaporation usually being just sufficient to absorb the normal inflow of heat through the walls of the cabinet. The cold condensate flows back to the body of the liquid and helps to absorb the normal inflow of heat. Under these circumstances, the heat transfer is relatively slow, especially if the surface of the liquid be covered by a non-volatile liquid immiscible therewith. If, however, the temperature in the cabinet rises above the boiling point of the liquid in the system, as when a door to the cabinet is opened with the admission of warm air, the liquid boils, absorbing heat rapidly and furnishing a relatively large flow of vapor to carry heat to the cold surface to be given up in condensation. Thus there is a sharp break in the rate of heat transfer when the temperature of the cabinet rises past the boiling point of the liquid. The critical temperature of operation may be determined by the selection of a liquid which boils at the desired temperature at the low pressures employed in the system. The actual boiling point will depend on the total pressure of the gas and vapor acting on the free surface of the liquid. By the invention, the boiling point in a given system may be readily adjusted within limits by changing the total volume of the closed system and hence changing the partial pressure of the air or inert gas left in the system when it is sealed. While the pressure of a certain amount of inert gas in the system is thus desirable for the purpose of regulating the boiling point of the volatile liquid in the system and hence of the operating temperature of the warmer portion of the system, yet it is advantageous to keep the partial pressure of the inert gas as low as practicable since too much gas in the system retards diffusion of the vapor from the liquid body to the cold surface and reduces the sensitivity of response of the apparatus to a rise of temperature in the refrigerator cabinet. Hence a liquid is preferably chosen which has the desired boiling point when the pressure on its surface is very low. Thus the vapor leaving the liquid by evaporation or ebullition travels quickly to the cold

surface of the refrigerant container to give up its heat energy in condensing again to the liquid state.

The condensate on the cold surface is chilled before it drips off, so that an additional refrigerating effect is obtained by the return of the chilled condensate to the body of liquid.

Satisfactory control of refrigeration can also be obtained by the use of two secondary refrigerants having different characteristics, one being freezable at a point above the temperature of the primary refrigerant, the other being non-freezable at such temperature. In using a combination of two such substances, the freezable liquid should have as high a vapor pressure as possible at the desired temperature for the cabinet, and should have a freezing point as much as possible above the temperature of the primary refrigerant, but below the temperature desired in the cabinet. A liquid having these characteristics boils readily at comparatively low temperatures, and is readily congealed by contact with a metal container of solid carbon dioxide. The non-freezing liquid should preferably have a vapor pressure which is low in comparison to that of the freezable liquid, so that but little air or inert gas is required in the system to prevent boiling of the non-freezable liquid at too low a temperature. In employing a combination of such substances, the system may first be exhausted to a low vacuum, then as much freezable liquid may be introduced as will congeal on the carbon-dioxide container. Then the non-freezable liquid with low vapor pressure is introduced in sufficient quantity to lower the temperature of the cabinet, by its active boiling, to a point somewhat below the desired temperature. The cabinet temperature is then raised to the desired point by the introduction of air into the system to raise sufficiently the boiling point of the non-freezing liquid. In operation, the non-freezing liquid remains for the most part in the portion of the closed system which is within the refrigerator cabinet. When the temperature of the cabinet rises above the desired maximum, as when the door is opened or warmer goods are inserted, the non-freezing liquid boils, sending a stream of vapor to condense on the congealed coating of freezable substance on the cold container. This reduces the freezing point of the outer layer of the coating which thereupon melts and flows into the liquid body. The freezable substance, having a high vapor pressure, quickly boils off and thus accelerates the absorption of heat from the cabinet until equilibrium is restored again.

According to the invention, the apparatus may be arranged to distribute the refrigerating effect of the refrigerant evenly through the cabinet so as to avoid or minimize the uneven refrigeration usually obtained due to excessive chill in the immediate vicinity of the refrigerant, and insufficient chill in parts of the cabinet remote from the refrigerant.

Since the invention involves the controlled transfer of heat from a refrigerator cabinet to the refrigerant, an ancillary feature of the invention is the refrigeration of a plurality of cabinets from a single refrigerating point, this feature of the invention being especially applicable to domestic refrigerator cabinets in apartment houses, which may then be chilled from a single source of refrigeration.

Various additional advantageous features of this invention will be apparent to one skilled in the art, from the description thereof which follows and from the illustration thereof on the drawings, of which,—

Figure 1 is a side elevation of a motor truck having a refrigerator body which may embody the invention.

Figure 2 is a fragmentary section of the refrigerator body shown in Figure 1, the section being taken on a vertical plane.

Figure 3 is a horizontal section on the line 3—3 of Figure 1.

Figure 4 is a detail of piping suitable for use in the apparatus illustrated in Figures 2 and 3.

Figure 5 is an elevation partly in section showing a detail of the apparatus.

Figure 6 is a diagrammatic illustration of a different embodiment of the invention.

Figure 7 is a perspective view of a refrigerator unit shown in Figure 6.

Figure 8 is a section of the unit shown in Figure 7, taken on a vertical plane.

Figure 9 illustrates another embodiment of the invention.

Figure 10 is a section showing the refrigerating mechanism of Figure 9.

Figure 11 is a fragmentary view of a portion of the piping shown in Figure 10, a one-way valve being illustrated therein.

Figure 12 shows in section a still further modified form of invention.

The invention as illustrated in Figures 1 to 5 may comprise a refrigerator cabinet 20, mounted on a truck as shown, or, in any other way in which refrigerator cabinets are customarily used. The cabinet 20 may comprise a wall of suitable insulation. Set into the cabinet is a container 22 adapted to hold a suitable supply of solid carbon dioxide 23 or other primary refrigerant. The container 22 may be closed at the top by a suitable cover 24, a heavy lid 25 being also employed, if desired, to cooperate with the wall of the cabinet in insulating the CO_2 container as completely as possible from the outside atmosphere. Surrounding the sides and bottom of the inner container 22 is an outer casing 26 which, with the container 22, forms a gas-tight jacket 21 around and beneath the refrigerant. The casing 26 may be separated from the refrigerator chamber 27 by a partition 28 of suitable insulating material, but this partition is not essential in all cases.

The means provided for the transfer of heat from the chamber 27 to the refrigerant 23 so as to chill the chamber to the desired degree may comprise a piping 29 which, as shown in Figure 3, may conveniently be arranged in a series of coils in order to present a large total surface to the interior of the chamber. This arrangement of piping and coils is merely illustrative of a variety of ways in which the same length of piping may be disposed in the refrigerating chamber. The two ends of the pipe may be connected, as shown, to the jacket 21, one end 30 of the pipe entering the jacket through the side of the casing 26, the other end 31 of the pipe entering the jacket through the bottom of the casing 26. The pipe 29 is preferably filled with a secondary refrigerant, such as carbon tetrachloride, chloroform, ortho-chlortoluene, or any one or more of a number of inorganic or organic compounds having suitable melting points and boiling points for the cabinet temperatures desired and having other characteristics requisite for practical operation. The level of the liquid in the pipe 29

is normally below the bottom of the casing 26, so that as the vapor from the liquid is condensed on the walls and bottom of the container 22, the condensate will run back into the pipe 29 through the end 31. According to the invention the pipe 29 and the jacket 21 with which it communicates form a gas-tight system containing the secondary refrigerant which is selected according to the cabinet temperature desired and may comprise one or more volatile liquids which have a boiling point (at a low pressure) a few degrees below the temperature desired for the cabinet.

In assembling the apparatus shown in Figure 2, the secondary refrigerant is introduced into the closed system, and the system is thereupon pumped out, so that only a small quantiy of air or non-condensable gas is left with the vapor of the liquid or liquids in the pipe 29. The system is then sealed off and thereafter remains gas-tight. When the refrigerator is put into operation, the container 22 is filled with solid carbon dioxide or other suitable low temperature refrigerant. The container 22 is preferably constructed so as to facilitate the chilling effect of the carbon dioxide on the walls and bottom thereof, so that the outside of the container is maintained at a temperature as near as possible to that of the refrigerant itself. Vapor from the liquid in the coils 29 is present in the jacket 21, mingled with a small amount of air or other non-condensable gas. The vapor adjacent to the cold walls of the container 22 is condensed into liquid and, in some cases, into a frost layer also, the presence of frost depending on the nature of the secondary refrigerant used. If, for example, carbon tetrachloride be employed as the secondary refrigerant, the outer surface of the container 22 will soon become sheathed with a layer of solid carbon tetrachloride. If, however, chloroform be employed as the secondary refrigerant, the melting point of chloroform is so low that no frost of solid chloroform will ordinarily collect on the surface of the container 22. In either case, liquid condensate will drip from the container 22 and will flow back into the pipe 29. At the same time, the condensation of vapor within the jacket reduces the partial pressure of the vapor, thus lowering the total gaseous pressure within the closed system and consequently lowering the boiling point of the liquid in the pipe 29. When the pressure is sufficiently reduced, the liquid in the pipe 29 begins to boil, so as to replace the vapor condensed on the cold walls of the container 22. This boiling rapidly chills the liquid in the pipe 29, and hence chills the pipe itself, so that the pipe thus becomes the immediate refrigerant for the chamber 27. By regulating the quantity of residual non-condensable gas left in the closed system before it is sealed off, the boiling point of the liquid in the pipe 29 may be regulated to approximately the desired temperature, so that the equilibrium temperature of the cabinet 20 may thus be established within reasonable limits at a fairly definite point.

The range of possible temperatures of equilibrium may be greatly extended by suitable choice of secondary refrigerants according to their boiling points at low pressures, the fine adjustment of the equilibrium temperature in the chamber being made by the amount of non-condensable gas left in the system when it is sealed off. As long as there is sufficient heat in the chamber 27 to cause the liquid in the pipe 29 to boil, the transfer of heat from the chamber to the primary refrigerant will be rapid. As soon as the temperature in the chamber falls to a point below the boiling point of the liquid, the transfer of heat will be considerably less and will result from the slower evaporation of the vapor from the free surface of the liquid. Thus the boiling point of the liquid is a critical point, above which the heat transfer from the cabinet, or, in other words, the chilling effect of the refrigerating system is relatively efficient. Below the boiling point of the liquid in the pipe 29, the system is relatively inefficient so that the system thus acts to maintain the refrigerator chamber at a temperature which is closely constant and also acts to take up rapidly any casual heat that may be introduced from time to time into the chamber, as by the opening of a door for the insertion or removal of goods. In order to facilitate the transfer of heat from the chamber to the liquid in the pipe 29, the pipe itself may be constructed with a helical flange 32, as shown in Figure 4, pipe of this kind being well known in the art.

An especially sensitive apparatus may be obtained by the use of a combination of suitable secondary refrigerants, one being freezable at a temperature well above that of solid CO_2 and having a comparatively high vapor pressure, the other being non-freezable at the temperature of solid CO_2 and having a comparatively low vapor pressure. As an example of such a combination, carbon tetrachloride and methyl alcohol may be used. The former freezes at about −11° F. and has a vapor pressure higher than that of methyl alcohol, the freezing point of which is well below the sublimation point of solid CO_2. Apparatus such as is illustrated in Figure 2 may be conveniently charged by first evacuating the closed system as completely as is practically possible. The inner container is filled with solid CO_2 and then carbon tetrachloride vapor is introduced into the closed system to condense in a solid coating on the outer surface of the CO_2 container. Eventually, when the coating becomes sufficiently thick, the temperature of its outer surface reaches the melting point of carbon tetrachloride. Thereupon the vapor condenses to liquid form and drips into the coils 29. When this begins, the supply of carbon tetrachloride vapor is shut off, and methyl alcohol vapor is slowly supplied. This condenses to liquid form and runs into the coils 29 where it boils rapidly, chilling the coils and thereby cooling the interior of the cabinet. The cabinet temperature is watched during the addition of the methyl alcohol, the temperature dropping with the addition of alcohol. An effect of the condensation of alcohol on the carbon tetrachloride coating is to lower the melting point of the outer layer of the carbon tetrachloride so that some of it melts and runs into the coils 29. This mixes with the alcohol in the coils and lowers the boiling point of the alcohol so that by regulating the amount of alcohol added, the temperature of the box is reduced to a point below that desired for normal operation. Then a small amount of air is let into the system, sufficient to raise the boiling point of the liquid in the coils to a point at which it will maintain the cabinet at the desired temperature. The system is then sealed off and is ready for service.

It may be desired to change the equilibrium temperature of the chamber without necessitating the opening of the closed system which includes the pipe 29 and the jacket with which it communicates. This may be done within limits by varying the partial pressure of the non-condensable gas within the system. To this end I

may provide sylphon bellows 33, as shown in Figure 5. This bellows may be connected with the jacket as by a pipe 34 so that the interior of the bellows adds a certain volume to the total volume of the closed system. It is evident that by compressing or expanding the bellows, the total cubic capacity of the system may thus be altered. Since the volume occupied by the liquid in the pipe 29 is substantially constant, the remaining volume which contains a mixture of air or other non-condensable gas with the vapor from the liquid may be altered to change the partial pressure of the air in the system. For this purpose the free end of the bellows may have secured thereto a stem 35 which is axially movable to compress or expand the bellows 33. Any suitable mechanical device may be provided for this purpose, such as a rack on the stem 35 to cooperate with a pinion mounted on the body 20, or a screw thread, as shown, cooperating with a hand-operable nut 36 which is held against axial movement as by a flange member 37 mounted on the body 20. Rotation of the nut 36 will thus cause axial movement of the stem 35 to expand or contract the bellows 33 and thus to vary the cubic capacity of the closed system and the partial pressure of the non-condensable gas therein. Thus by raising the partial pressure of the gas in the system, the boiling point of the liquid is correspondingly raised so that the equilibrium temperature of the chamber 27 is likewise raised. In like manner the bellows 33 may be expanded to reduce the partial pressure of the non-condensable gas within the system and thus also to reduce the boiling point of the liquid in the pipe 29 and equilibrium temperature in the chamber 27.

If desired, a small amount of non-volatile, non-freezing liquid may be introduced into the pipe 29 to float on the free surface of the secondary refrigerant therein. This lighter liquid should be immiscible with the secondary refrigerant and of lower specific gravity. The presence of a film of such liquid on the free surface results in a diminution of evaporation of the secondary refrigerant when the latter is at a temperature below its boiling point. This more sharply defines the critical temperature of the pipe 29 and hence of the chamber 27.

The transfer of heat from the refrigerating chamber to a primary refrigerant by means of the vapor of the volatile liquid at low pressure may be applied to other forms of apparatus, such, for example, as are illustrated in Figures 6, 9 and 12. Figure 6 illustrates the idea as applied to a central refrigerating system which may be installed in an apartment house and from which a number of individual refrigerator cabinets in various apartments can be conveniently chilled. One such cabinet is indicated at 40, this cabinet containing a refrigerating unit 41 which may be of convenient size and shape, as shown in Figure 7, a central recess 42 being provided for the insertion of suitable trays for the formation of ice cubes. The unit 41 is hollow and gas-tight and communicates as by a pipe 44 with a condenser 45 which, as shown, may be in the form of a hollow box of suitable size. The pipe 44 is preferably surrounded by suitable insulation 46. The unit 41, the condenser 45 and the pipe 44 which connects the two all constitute a closed system which is gas-tight. This system contains a suitable amount of secondary refrigerant 47, the air and vapor being partially exhausted from the system prior to sealing it off. The residual air or non-condensable gas is left in the system in a quantity suitable for the desired equilibrium temperature of the unit 41. In order to chill the condenser 45, any suitable means may be employed. For example, solid carbon dioxide may be packed around the condenser 45 or any other cold medium may surround it. For economical operation, the condenser may be immersed in a suitable brine 48, this brine being chilled to a suitable low temperature by a coil 49 leading from a refrigerating machine 50 which may be of any desired type capable of producing sufficiently low temperatures. As many such machines are now on the market, it is not necessary to specify any particular one.

The brine 48 is preferably contained in a suitably insulated vat 51 having an insulated cover 52. The vat 51 is made of sufficient size to contain as many condensers 45 as there are cabinets 40 to be chilled. Thus, as shown in Figure 6, a vat may contain five condensers 45, each of these condensers being connected by a pipe to a corresponding unit 41 contained in a cabinet 40. It is obvious that the number of condensers in a vat may be varied at will, the primary refrigerating machine of suitable capacity being provided according to the refrigerating requirements. By the operation of the refrigerating machine 50 the brine 48 is maintained at a suitably low temperature, thus chilling the condensers 45. The vapor within each condenser condenses on the cold walls thereof and the condensate runs back through the pipe 44 to the unit 41. To replace the condensed vapor, there is a counter flow of vapor from the unit 41 toward the condenser 45. If the pressure in the condenser is sufficiently low, due to the condensation of the vapor therefrom, the liquid 47 in the unit 41 boils, thus taking up heat rapidly from the liquid 47 itself and from the walls of the container 41. Thus the container 41 is chilled and in turn it chills the interior of the cabinet 40. A film 53 of oil or other suitably non-volatile and non-freezing liquid is preferably floated on the surface of the secondary refrigerant 47 to minimize evaporation of the liquid 47 when below its boiling point.

If desired, different normal temperatures may be maintained in the several units 41 by the employment of different secondary refrigerants therein and/or by different partial pressures of non-condensable gas in the several systems. Thus, for example, a single vat 51 may be used in connection with a number of domestic refrigerator cabinets to be kept at 40° F. or so, and at the same time it may be used to refrigerate a refrigerator for frozen meat or the like to be kept at 20° F. or so, these figures being given merely by way of example.

An important practical advantage of this type of system for apartment houses resides in the fact that each individual system operates at less than atmospheric pressure, so that instead of escape of compressed gas in case of leakage in the system, air is drawn in through any leak, with the result that the diffusion of the vapor is greatly retarded and the system becomes inefficient, thereby giving notice of the existence of the leak.

Figure 9 illustrates a use of the invention in connection with a show case for the display of fish, meats or other perishable products. On the rear wall 60 of the show case may be mounted an insulating box 61 within which is a double walled container forming an inner compartment 62 for the primary refrigerant, and a jacket 63 for the secondary refrigerant. Within the inner com-

partment a suitable supply of carbon dioxide or other refrigerant may be placed. The outer compartment or jacket 63 communicates through its bottom with a pipe 64 through a suitable trap 65. As shown in Figure 11 on a larger scale, a light valve 66 may be inserted in the trap. The pipe 64 may be arranged, as shown in Figure 9, on the floor of the show case, the end of the pipe 64 remote from the unit 61 may be brought upwardly to the upper portion of the show case, the continuation of the pipe being in the form of a coil 67 arranged just below the top of the show case. The other end 68 of the coil 67 returns to the jacket 63 and enters the jacket through a side wall. The pipes 64 and 67 thus form, with the jacket 63, a gas-tight system. The pipe 64 is normally full of a volatile liquid or liquids, the pipe 67 and the jacket 63 being full of a mixture of vapor from the liquid and a certain amount of non-condensable gas such as air. The valve 66 prevents the liquid from leaking up through the trap 65 during ebullition, and also ensures a flow of cold vapor from the liquid through the upper coils 67 of the pipe to the jacket 63 to chill the upper portion of the show case. Prior to sealing off the system, the air is, for the most part, pumped out, the partial pressure of the air left in the system being considerably below atmospheric pressure. The actual partial pressure of the air left in the system is determined by the temperature at which it is desired that the secondary refrigerant shall boil. Thus the equilibrium temperature of the coil 64 may be determined. Since the temperature of the vapor traveling from the coil 64 through the coil 67 to the jacket 63 is initially determined by the temperature of the liquid from which it starts, the equilibrium temperature of the coil 67 will thus depend largely upon the equilibrium temperature of the coil 64. The closed systems illustrated in Figures 6 and 9 may both be provided with sylphon bellows such as are illustrated in Figure 5, if it is desired to provide apparatus in which the equilbrium temperature may be easily varied.

The invention in one of its aspects may also be embodied in relatively simple form in a jug or the like for keeping food or other materials suitably chilled. An article of this type is illustrated in Figure 12, wherein is shown a jug having a lining 70 with an insulating cover 71. The jug is made with a large mouth into which is set a metal container 72, this container comprising a tight box partially filled with secondary refrigerant 73 on the surface of which may be a film of non-volatile liquid 74 to retard evaporation of the secondary refrigerant. The cylindrical sides of the box 72 may extend upwardly above the top of the box so as to form an open receptacle for a quantity of solid carbon dioxide or other primary refrigerant. This upward extension 75 of the side walls of the box may be in threaded engagement with the inner surface of the neck of the jug so as to support the box 72 within the jug, or may be externally shaped for wedged engagement with the neck. In order to insulate the carbon dioxide from the outside atmosphere, a suitable collar 76 may be screwed into the neck of the jug to bear against the top of the flange 75. Into the top of the collar 76 is fitted a suitable cork or other closure 77 which closes the chamber containing the carbon dioxide. The bottom of the box 72 may be provided, if desired, with a number of fins 78 to facilitate the conduction of heat from the interior of the jug to the secondary refrigerant.

In using the jug, the products to be chilled are first placed therein, then the box 72 is inserted in the neck of the jug, the insulating collar 76 is inserted thereafter, a suitable charge of solid carbon dioxide is placed on the top of the box 72 and the cork 77 is inserted in the opening of the collar 76. Any additional insulation, such as a quilted hood or the like, may also be employed to retard access of atmospheric heat to the interior of the jug.

It is understood that the foregoing description of various embodiments of the invention are by way of illustration only and not by way of limitation, and that the invention embraces in its scope all reasonable variations and changes of structure which may come within the definition of the claims which follow.

I claim:

1. The method of controlling the boiling point of a volatile liquid which comprises sealing a quantity of said liquid with a quantity of inert gas in a gas-tight system, and altering the cubic capacity of the system while thus sealed.

2. The method of controlling the heat-absorbing characteristics of a volatile liquid which is sealed with a quantity of inert gas in a gas-tight system, a vapor-containing portion of said system being chilled, which comprises altering the cubic capacity of the system while thus sealed.

3. Apparatus for controlling the refrigeration of a refrigerator cabinet, comprising a gas-tight system having a portion for exposure to the interior of said cabinet and another portion for exposure directly to solid carbon dioxide, a quantity of volatile liquid in said system having a freezing point between the temperature of solid carbon dioxide and that desired for the cabinet, and a quantity of a second volatile liquid in said system having a freezing point below the temperature of solid carbon dioxide.

4. Apparatus for controlling the refrigeration of a refrigerator cabinet, comprising a gas-tight system having a portion for exposure to the interior of the cabinet and another portion for exposure directly to solid carbon dioxide, a quantity of volatile liquid in said system having a freezing point between the temperature of solid carbon dioxide and that desired for the cabinet, and a quantity of a second volatile liquid in said system having a freezing point below the temperature of solid carbon dioxide and a vapor pressure lower than that of the first said liquid.

5. Apparatus for controlling the refrigeration of a refrigerator cabinet, which comprises a gas-tight system having a portion for exposure to the interior of said cabinet and a portion for exposure directly to solid carbon dioxide, a quantity of volatile liquid in said system having a freezing point between the temperature of the solid carbon dioxide and that desired for the cabinet, a quantity of a second volatile liquid in said system having a freezing point below the temperature of solid carbon dioxide, and a small quantity of a non-freezing, non-condensable gas in said system.

6. Apparatus of the class described comprising a sealed system, a quantity of volatile liquid in a portion thereof, an inert gas mingled with vapor of the liquid in the remainder thereof, means for facilitating the application of a refrigerant to a vapor-containing portion thereof, and means for varying the cubic capacity of said system while sealed.

7. Apparatus of the class described comprising a sealed system, a quantity of volatile liquid in a

portion thereof, an inert gas having a less than atmospheric pressure mingled with vapor in the remainder thereof, means for facilitating the application of a refrigerant to a vapor containing portion of said system, and means for varying the cubic capacity of said system while sealed.

8. Apparatus of the class described comprising a receptacle for refrigerant, a sealed system having a portion adjacent to said receptacle and in intimate thermal relation therewith, a quantity of volatile liquid in a portion of said system remote from said receptacle, a film of non-volatile liquid immiscible with said volatile liquid and floating on the free surface thereof, and a quantity of inert gas at less than atmospheric pressure mingled with the vapor of said liquid in the portion of the system not occupied by said liquids.

9. Refrigerating apparatus comprising a plurality of refrigerator cabinets, a common source of refrigeration for said cabinets, and means for transferring heat from said cabinets to said source of refrigeration, said means including a sealed system consisting of a hollow unit in each cabinet, a hollow receptacle corresponding to each said unit exposed to said source for direct chilling thereby, a pipe connecting each said unit with its corresponding receptacle, a quantity of volatile liquid in each said unit, the liquid in each unit having a boiling point suitably related to the temperature desired for its respective refrigerator cabinet and a non-condensable gas at less than atmospheric pressure mingling with the vapor of said liquid in said pipe and receptacle.

10. The method of preparing a container for use as in regulating the transfer of refrigerating effect of a low-temperature refrigerant such as solid carbon dioxide to maintain a predetermined temperature in a space to be refrigerated, which comprises introducing into the container a quantity of volatile liquid having a boiling point at low pressures substantially but not excessively lower than said predetermined temperature, evacuating from the container most of the air initially therein, regulating the amount of residual air left in the container to determine the boiling point of the liquid in suitable proximity to said predetermined temperature, and sealing off the container.

11. Apparatus of the class described, comprising a gas-tight system, a quantity of volatile liquid in a portion thereof, said liquid having a boiling point at low pressures substantially but not excessively below the temperature desired for the space to be refrigerated, a quantity of non-condensable gas in said system at a pressure substantially below atmospheric mingled with the vapor of the liquid therein, and means for applying a chilling agency to a vapor-containing portion of the system.

WILLIAM F. BAIRD.