June 5, 1923. 1,457,830

R. B. GERHARDT

AUTOMATIC WORK FEEDER

Filed Aug. 18, 1921 3 Sheets-Sheet 1

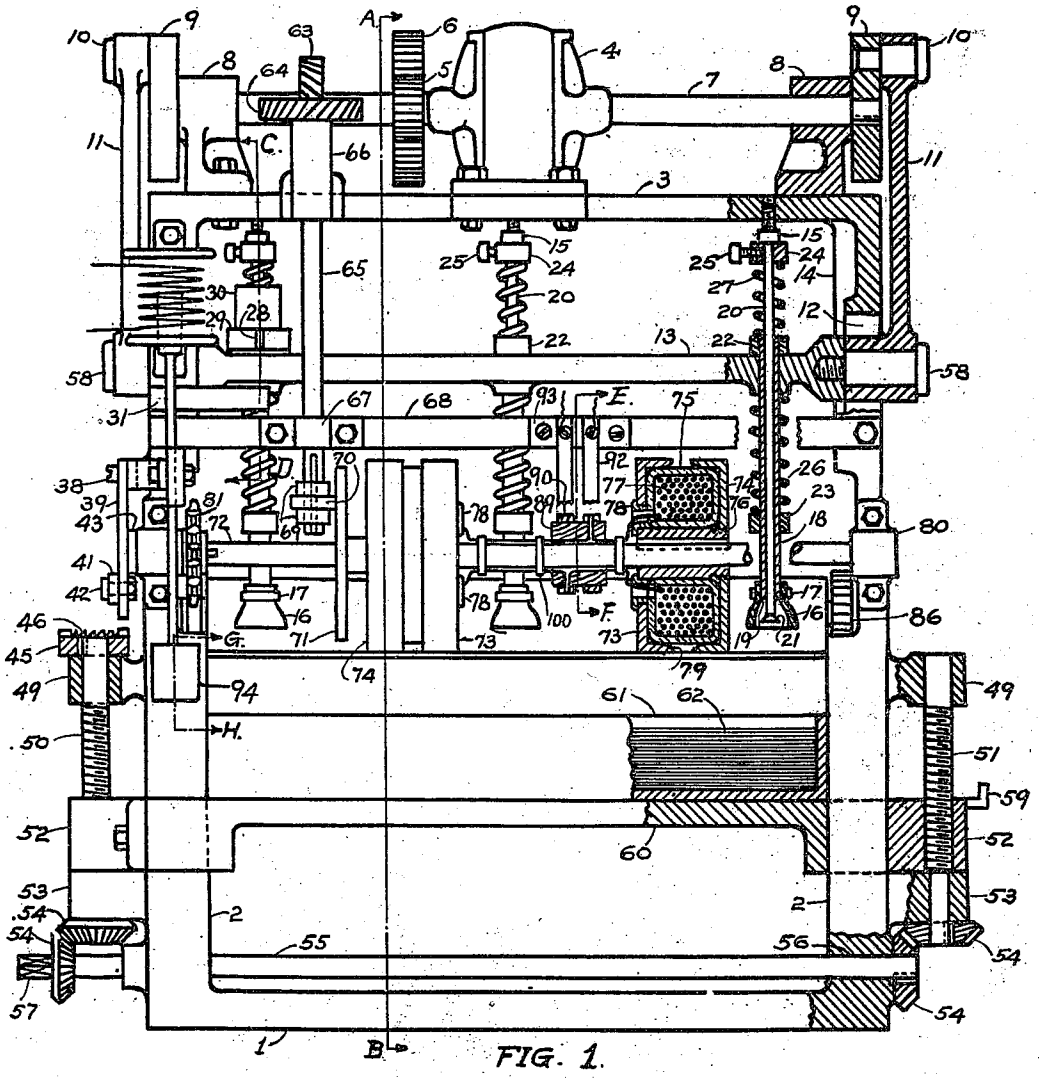

FIG. 1.

Reginald B. Gerhardt. INVENTOR.

WITNESSES.

W. F. Dorworth

C. F. Ball

BY

W. E. Smith. ATTORNEY.

June 5, 1923. 1,457,830

R. B. GERHARDT

AUTOMATIC WORK FEEDER

Filed Aug. 18, 1921 3 Sheets-Sheet 2

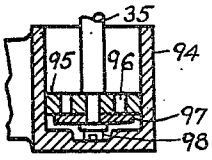

FIG. 6.

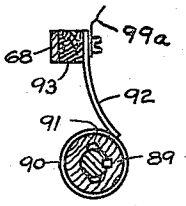

FIG. 5.

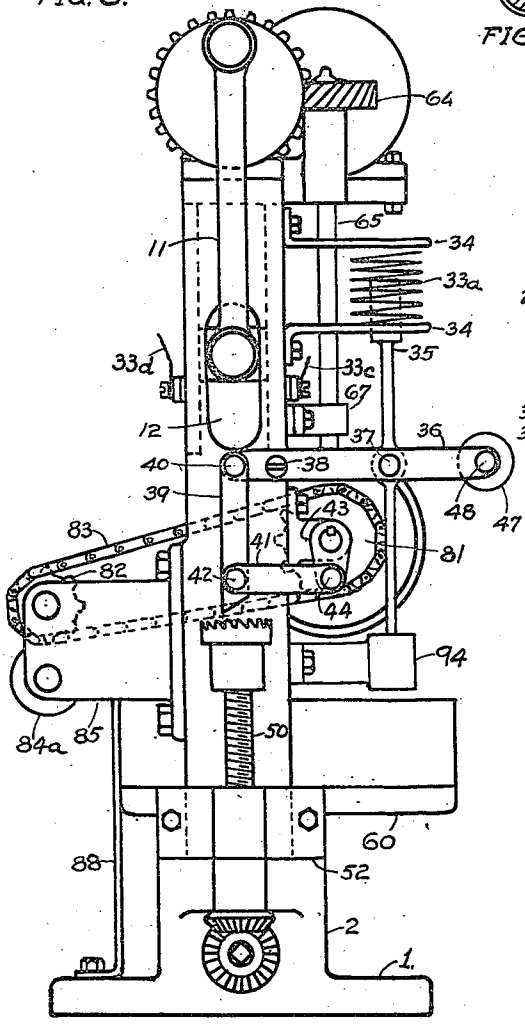

FIG. 2.

FIG. 4.

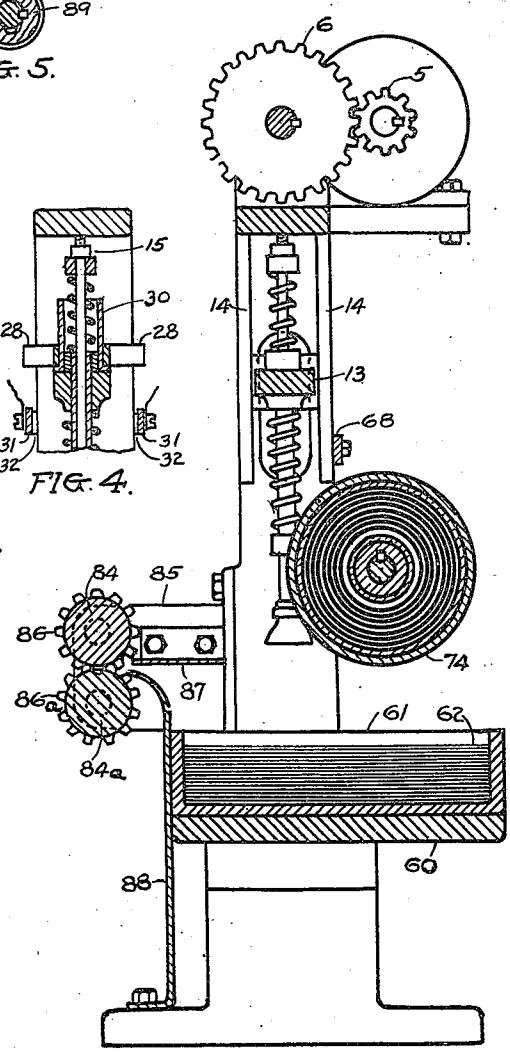

FIG. 3.

Reginald B. Gerhardt INVENTOR.

WITNESSES.

M J Dorwoth

C L Ball

BY

W. E. Smith ATTORNEY.

June 5, 1923. 1,457,830

R. B. GERHARDT

AUTOMATIC WORK FEEDER

Filed Aug. 18, 1921 3 Sheets-Sheet 3

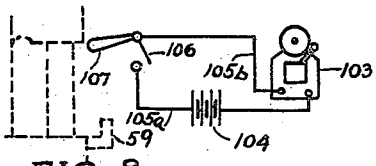

FIG. 8.

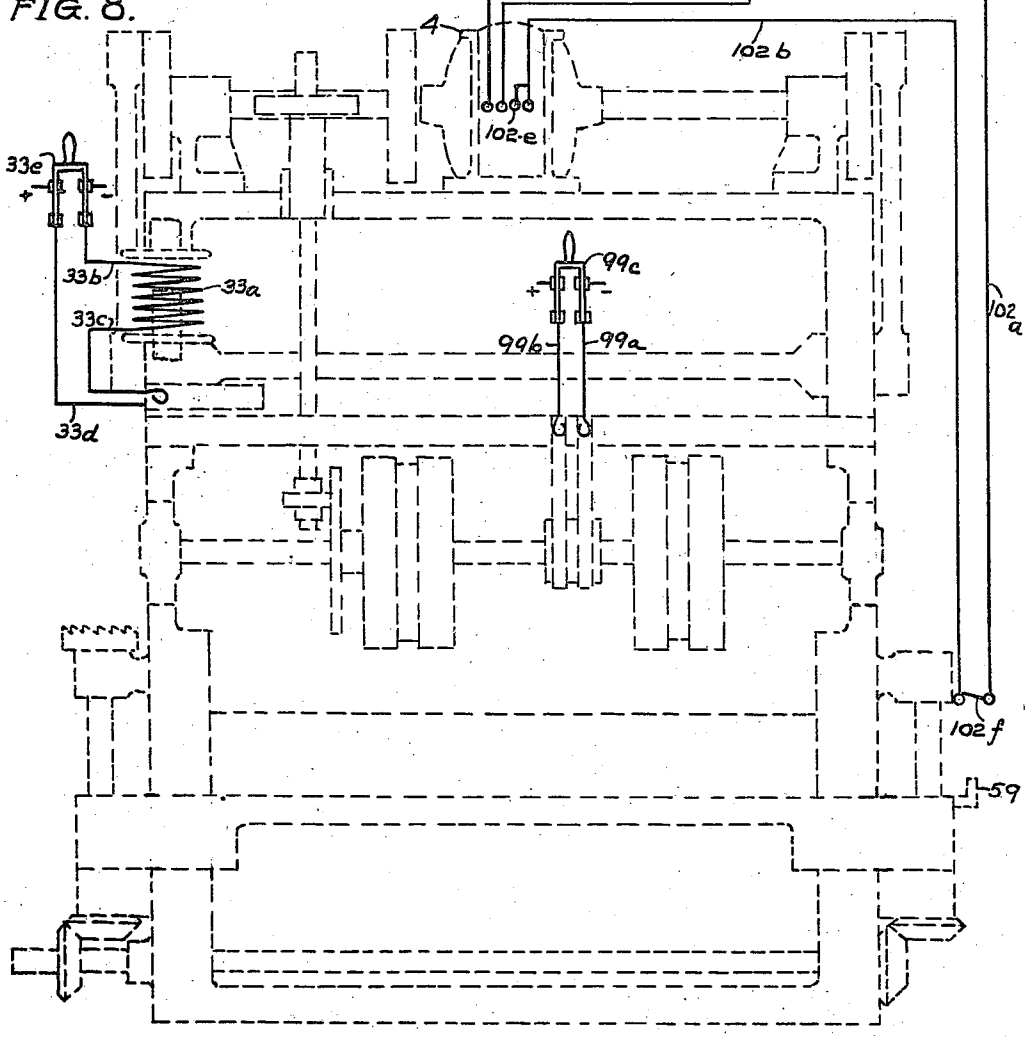

FIG. 7.

Reginald B. Gerhardt, INVENTOR.

WITNESSES

W. J. Dorwood

C. L. Ball

BY

W. E. Smith, ATTORNEY.

Patented June 5, 1923. 1,457,830

UNITED STATES PATENT OFFICE.

REGINALD B. GERHARDT, OF SPARROWS POINT, MARYLAND.

AUTOMATIC WORK FEEDER.

Application filed August 18, 1921. Serial No. 493,480.

To all whom it may concern:

Be it known that I, REGINALD B. GERHARDT, a citizen of the United States, residing at Sparrows Point, in the county of Baltimore and State of Maryland, have invented a new and useful Automatic Work Feeder, of which the following is a specification, the accompanying drawings forming a part of the same.

My invention relates to improvements in automatic work feeders for sheets of any magnetic material in which reciprocating vacuum lifters operate in conjunction with rotating electromagnets; and the objects of my improvements are first, to provide a means to separate the work for feeding individual sheets and second to afford facilities for proper adjustment of feed table, vacuum lifters and electromagnets for the automatic feeding of work to a forming or other machine.

I attain these objects by the mechanism illustrated in the accompanying drawings in which—

Figure 1 is a vertical front elevation of the entire machine partly in section. Fig. 2 is a vertical end elevation. Fig. 3 is a vertical section of the machine on line A—B, Fig. 1. Fig. 4 is a vertical sectional view on line C—D, Fig. 1. Fig. 5 is a vertical section on line E—F, Fig. 1. Fig. 6 is an enlarged section on line G—H, Fig. 1. Figs. 7 and 8 are diagrammatic views of the electrical circuits for the controlling of the operating of my automatic work feeder.

Similar numerals refer to similar parts throughout the several views.

Referring more particularly to the drawings, the device comprises a base 1, standards 2 and a top plate 3 which form the main frame for the device.

Secured to the top plate 3 is an electric driving motor 4 which is provided with a shaft on which is mounted a pinion 5. Mounted on each end of the top plate 3 is a journal box 8, which journal boxes support a drive shaft 7, the latter provided with a gear 6 which meshes with pinion 5.

The numeral 13 designates a cross guide which is mounted for reciprocatory movement in channel bars 14 formed integral with standards 2. To impart a reciprocatory movement to the cross guide 13, each end thereof is pivotally connected to a connecting rod 11, by means of a pin 58 extending through a right angular portion formed integral with said rod 11 and extending through an aperture 12 in standard 2. The upper end of connecting rod 11 is pivotally and eccentrically secured to a crank disk 9 formed on each end of shaft 7, a pin 10 retaining rod 11 and disk 9 in connected relation.

Cross guide 13 is provided with a plurality of apertures for the reception of picker arms or sheet lifters. The picker arms each comprise a tube 18 which terminates in a vacuum cup 16, secured to said tube by a clamping band 17 or the like. The numeral 20 denotes a valve rod having a head 21 which is adapted to seat against valve seat 19 in suction cup 21. The end of valve rod 20 extends beyond the tube 18 and is provided with a collar 24 secured thereto by a set screw 25. The end of tube 18 is provided with a collar 22 and positioned on rod 20 between collars 22 and 25 is a coil spring 27. Near the lower end of tube 18 is a collar 23 and a coil spring 26 is positioned on the tube 18 between said collar 23 and cross guide 13. Secured to the top plate 3 above each of the lifters is a regulating screw 15.

The numeral 60 designates a vertically movable feeding table for the sheets 62. In some instances it may be desirable to feed the sheets from a liquid, and to this end a box 61 is provided as shown clearly in Fig. 1.

The electromagnets associated with this device, are keyed to a shaft 72, which is revolved in journals 80 fastened to standards 2. Shaft 72 is rotated by means of a friction gear mechanism, being driven from main driving shaft 7 on which is keyed a spiral gear 63 which meshes with a mating gear 64 keyed on shaft 65 which latter revolves in bearings 66 and 67 fastened to top plate 3 and bar 68 respectively. In the lower end of shaft 65 there is a long key for the driving of a pinion 70 which latter bears against the face of a friction disc 71, keyed on shaft 72 and so rotates shaft 72 and all parts keyed or fastened to said shaft. There will be times when the size of sheets to be fed to the forming or other machine will necessitate a change in speed of delivering the sheets from the electromagnets to the pinch rolls and to accomplish this, I provide on each side of 70 a collar 69 held at an adjustable location by a set screw to give the predetermined speed from friction pinion 70 to the electromagnets.

The electromagnets, one of which is shown

in section in Fig. 1 are constructed with a cylindrical shell 73 of soft iron material keyed to shaft 72 and with a threaded hub end 76 for the holding of flange 74 of soft iron material. The internal periphery of 73 and 74 is curved as shown at 79 in Fig. 1 to confine the magnetic field in an outward direction from center of the electromagnets or to the sheets being lifted and the threaded end 76 is provided as a means to regulate the strength of the magnetic influence for lifting different weights of sheets by turning flange 74 on thread 76 thereby narrowing or widening the space between 73 and 74 at periphery 79 and changing the magnetic influence to suit weights of sheets being lifted. The copper wire 77 for conducting of electric current to the end of outwardly cylindrical walls of shell 73 and flange 74 at 79, which are the poles of the electromagnets, is wound spirally around the hub of shell 73 and within the insulated casing 75. The two ends of said wire pass through insulated bushings 78 affixed to shell 73, and are guided by bands 100 on shaft 72 to collector rings 90 on collar 89 keyed to shaft 72. Collar 89 is grooved as shown in section at 91, Fig. 5 for passage of electric current conducting wires from collector rings 90 on which bars 92, fastened to insulated block 93 on a bar 68, bear to transmit the electric current to the electromagnets through wires 99^a and 99^b from knife switch 99^c shown in Fig. 7.

At Fig. 4 is shown a sectional view of the top part of one of the lifters to which has been applied a means whereby the pile sheets of sheets 62 will be kept at the proper level to be within range of the downward travel of the lifters as the pile of sheets diminishes in height due to feeding to forming or other machine.

On the downward stroke of the lifters if sheets 62 are so low in height of pile that contact fingers 28, which ride loosely on insulated cylinder 30, touch 31 fastened to one of the standards 2 at insulated washer 32, an electric circuit is completed to electric solenoid 33^a fastened to one of the standards 2 by supports 34, through wires 33^b, 33^c, 33^d and knife switch 33^e. At the instant the electric circuit is made, the solenoid core 35 which is extended to lever 36 and held to the same by the pin 37, is then pulled up by magnetic field of solenoid 33^a lever 36 being fulcrumed at pin 38 to one of the standards 2, imparts a downward movement to ratchet pawl 39 at pin 40 until the ratchet pawl engages teeth 46 of a ratchet wheel 45 keyed to elevating screw 50. Ratchet pawl 39 is given a reciprocating movement by lever 41, which is attached by pin 42 to the pawl 39 and by pin 44 to an eccentric lever 43 keyed to one end of shaft 72. The screw 50 is revolved in bearings 49 and 53 on one side of the feeder. The elevating screw 51 on the other side of the frame is similar to screw 50 except there is no extended end for a ratchet wheel and said screw 51 is rotated by means of miter gears 54 and shaft 55 which latter revolves in bearings 56 in standards 2. The helical threads of screws 50 and 51 engage internal threads in bearings 52 which are bolted to elevating table 60 guided in movements by standards 2 and in the revolving of these elevating screws the threads on said screws raise or lower the table 60 according to the direction of rotation of the screws. As an auxiliary for the rapid movement of table 60 there is provided on one end of shaft 55 a square end 57 for the reception of a hand crank or power wheel.

At Fig. 6 is shown an enlarged section of a dashpot for retarding the rapid withdrawal of pawl 39 from teeth 46 on ratchet wheel 45 giving a prolonged movement to wheel and so act against a counterweight 47 fastened to lever 36 by pin 48. The function of the counterweight 47 is to withdraw lever 39 from engaging teeth 46 after solenoid electric circuit has been broken when the sheets 62 have reached the proper height to be within the range of the downward stroke of the lifters. The dashpot consists of a cylinder closed on the bottom as shown in Fig. 6. On the end of an extension 35^a to solenoid core 35, there is held by screw 98 a piston head 95 provided with a washer 97 said piston head working in dashpot 94. In the upward stroke of core 35 due to an electric circuit at solenoid being completed by contact fingers 28 touching bars 32 as above described, air will flow through openings 96 in piston head 95, the pressure of the inflowing air bending resilient washer 97 away from face of piston head, equalizing the air pressure on each side of same but in the downward stroke of core 35 upon the breaking of the solenoid electric circuit, washer 97 is forced against face of piston head 95, closing openings 96 and causing a retarded downward movement by reason of air cushion in bottom of cylinder 94 thereby giving a delayed withdrawal of pawl 39 in teeth 46. In other words, the washer 97 acts as an automatic valve.

The lifters or picker arms are lowered by means of cross guide 13 being forced downwardly by connecting rod 11, in an obvious manner, the valve head 21 seating at 19 in cup 16. The cups engage one of the sheets 62 in the usual manner and upon raising of the cross guide 13 the sheet is elevated until it is seized by the electromagnets, and substantially simultaneously the set screw 15 forces valve head 18 in a downward direction, thus unseating valve head 22 from seat 19, breaking the vacuum in cup 16.

The sheets 62 after being grasped by the rotary electro-magnets, are delivered between guides 87 and 88 to the rotating pinch rolls 84 and 84ª from which the sheets are fed to a forming or other machine. The pinch rolls 84 and 84ª are mounted in bearings formed in extensions 85 secured to standards 2 in an obvious manner. Roll 84 is provided with a gear 86 which meshes with a gear 86ª, secured to the end of the roll 84ª. The opposite end of roll 84 is provided with a gear 82 which receives a sprocket chain 83 which chain is driven by a larger gear 81 keyed to a shaft 72. It is obvious that as shaft 72 is rotated, the pinch rolls 84 and 84ª will be rotated due to gears 81 and 82 and chain 83.

While the sheets 62 will normally be fed directly from off the table 60, there will be times when, due to the class of work being performed on said sheets, that they should be fed from a box of liquid, and to provide for this an open box 61 is placed on the table 60 and the sheets lifted from said box.

At Fig. 7 is shown diagrammatically the method of controlling electrically the starting and stopping of movements of the feeder. Knife switch 101 is provided for closing the electric circuit to the driving motor 4 through wires 102^a, 102^b, 102^c, 102^d, 102^e, switch 102^f and rheostat 102^g, the latter for controlling the electric current in the usual manner. For the purpose of automatically stopping the device when all of the sheets 62 have been removed from the table 60, a projection 59, formed on one bearing 52 of table 60 is provided. The automatic elevation of table 60 has been hereinbefore described, and when said table has reached its maximum height, the projection 59 will open a switch 102^f thus breaking the circuit through the main control switch 101 (see Fig. 7) and stopping the entire device.

As the feeding of sheets to forming or other machine is entirely automatic there is provided an alarm-bell 103 as shown in Fig 8 to give warning of the diminishing number of sheets on table or in box by means of projection 59 closing the electric circuit through wires 105^a and 105^b from battery 104 in lifting handle 107 of switch 106 as the elevating table is raised by screws 50 and 51.

Having described my invention what I claim is:—

1. A sheet feeding and delivering machine comprising a frame, a vertically movable feed table, a plurality of picker elements, means on said frame for reciprocating said picker elements, rotary magnetic means for receiving sheets from said picker elements, adjustable means for releasing a sheet from said picker elements simultaneously with the receipt of said sheet by said rotary magnetic means, means for rotating said rotary magnetic means whereby a sheet is moved horizontally, and pinch rolls adapted to remove said sheet from said rotary magnetic means.

2. A sheet feeding and delivering machine comprising a frame, a vertically movable feed table, a plurality of pneumatic picker elements, means on said frame for reciprocating said picker elements, variable rotary magnetic means for receiving sheets from said picker elements, means whereby said magnetic means may be rotated at varying speeds, variable means for releasing a sheet from the picker elements, and rolls adapted to receive a sheet for conveyance from said rotary magnetic means.

3. In a sheet feeding and delivering device, a frame, a sheet feeding table, a motor, a cross guide, a plurality of pneumatic picker elements actuated by said cross guide, means connecting said motor and cross guide for actuating the latter, a plurality of rotary electro-magnets, means for varying the strength of magnetic influence of each of said electro-magnets, variable driving connections from said motor to said electro-magnets, means for automatically elevating said sheet feeding table, and means for prolonging the elevating movement of said sheet feeding table.

4. In a sheet feeding and delivering device, having a frame, the combination with a driving motor, pneumatic picker elements, rotating electro-magnets for receiving sheets from said picker elements, driving connections between said motor and said picker elements and rotating electro-magnets, of a sheet feeding table, connected elevating screws for said feeding table, a rack on one of said screws, a solenoid secured to the frame, circuit making means on one of the before-mentioned picker elements connected to said solenoid, a lever pivoted to said frame and provided with a counter-weight at the free end thereof, a pawl secured to the opposite end of said lever and adapted to be lowered into engagement with the before-mentioned rack, a crank for reciprocating said pawl, a solenoid core pivotally secured to the before-mentioned lever and provided with an extension, a piston head secured to said extension and provided with valve means thereon, and a cylinder for said piston head.

5. In a sheet feeding and delivering device having a frame, the combination with a driving motor, pneumatic picker elements, rotating electro-magnets for receiving sheets from said picker elements, driving connections between said motor, picker elements, and rotating electro-magnets, of a sheet feeding table, a solenoid secured to the frame and provided with a core, means secured to one of the picker elements for energizing said solenoid, means connected to said core for elevating said sheet feeding table, and means

also secured to said core for retarding the withdrawal of said core from said solenoid.

6. A sheet feeding and delivering device comprising a frame, a motor, a plurality of suction picker elements, means connected to said motor for reciprocating said picker elements, adjustable means for releasing the suction of said picker elements, a plurality of rotary, variable, electro-magnets adapted to receive a sheet following its elevation by said picker elements, an adjustable driving connection from said motor to said electro-magnets, a sheet feeding table, and means operable by one of said picker elements for elevating said sheet feeding table.

7. A sheet feeding and delivering device comprising a frame, a driving motor, a vertically movable sheet feeding table, a plurality of rotary electro-magnets, means for varying the strength of magnetic influence of each of said electro-magnets independently of the current applied thereto, a plurality of vertically movable pneumatic picker elements for lifting sheets individually from said feeding table to said electro-magnets, and means rotatable by said motor for entirely removing the sheets from the rotary electro-magnets.

In testimony whereof, I have signed my name to this specification in the presence of two subscribing witnesses.

REGINALD B. GERHARDT.

Witnesses:
W. J. DOWORTH,
C. L. BALL.