# United States Patent [19]

**Hirsch**

[11] **Des. 243,113**

[45] ** **Jan. 18, 1977**


[54] **HYDROPONIC PLANTER**


[75] Inventor: **Michael J. Hirsch, Wayne, Pa.**

[73] Assignee: **Hydroplanters, Inc., Wayne, Pa.**



[**] Term: **14 Years**

[21] Appl. No.: **609,011**

[22] Filed: **Aug. 29, 1975**

[51] **Int. Cl.** ..... **D11—02**

[52] **U.S. Cl.** ..... **D11/156**

[58] **Field of Search** ..... 47/1.2, 34.13; D35/1, D35/3 R, 3 A; D29/28 R; D6/113



[56] **References Cited**

U.S. PATENT DOCUMENTS

| | | | |
|---|---|---|---|
| 3,177,616 | 4/1965 | Sawyer | 47/34.13 X |
| 3,300,895 | 1/1967 | Dosedla et al. | 47/1.2 |
| 3,451,162 | 6/1969 | Rasmussen | 47/1.2 |



*Primary Examiner*—Bernard Ansher

*Attorney, Agent, or Firm*—Charles H. Lindrooth


[57] **CLAIM**

The ornamental design for a hydroponic planter, as shown and described.

**DESCRIPTION**

FIG. 1 is an isometric view of a hydroponic planter showing my new design.

FIG. 2 is an isometric view of a modified embodiment of the hydroponic planter illustrated in FIG. 1.

FIG. 3 is a front elevation of the hydroponic planter shown in FIG. 1 and

FIG. 4 is a cross section taken on line 4—4 of FIG. 3.

The broken lines are shown for illustrative purposes only.

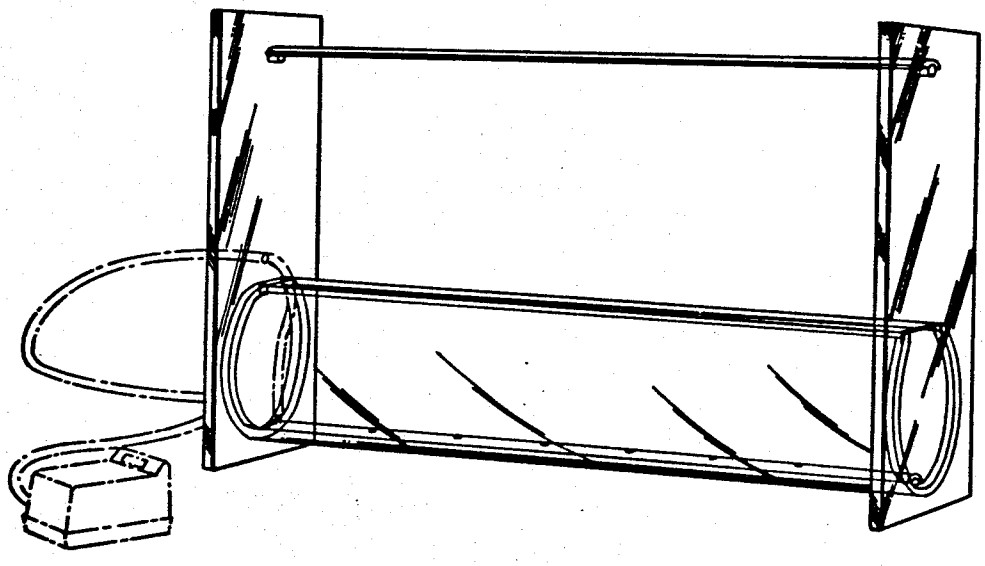

FIG. 1.

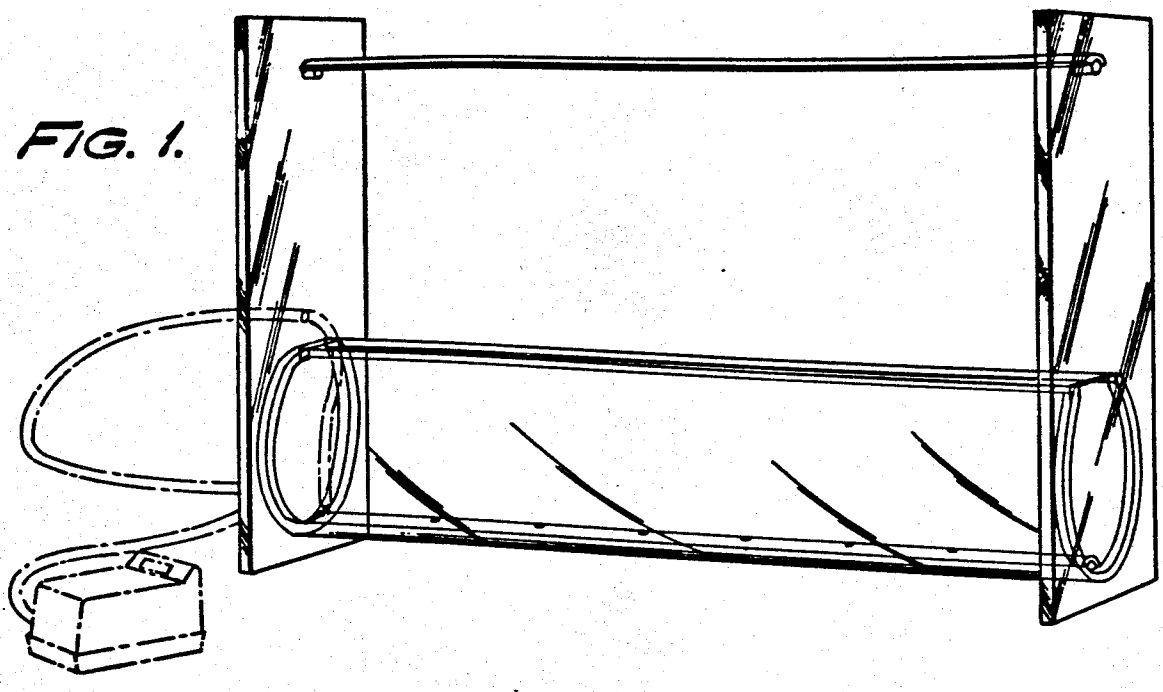

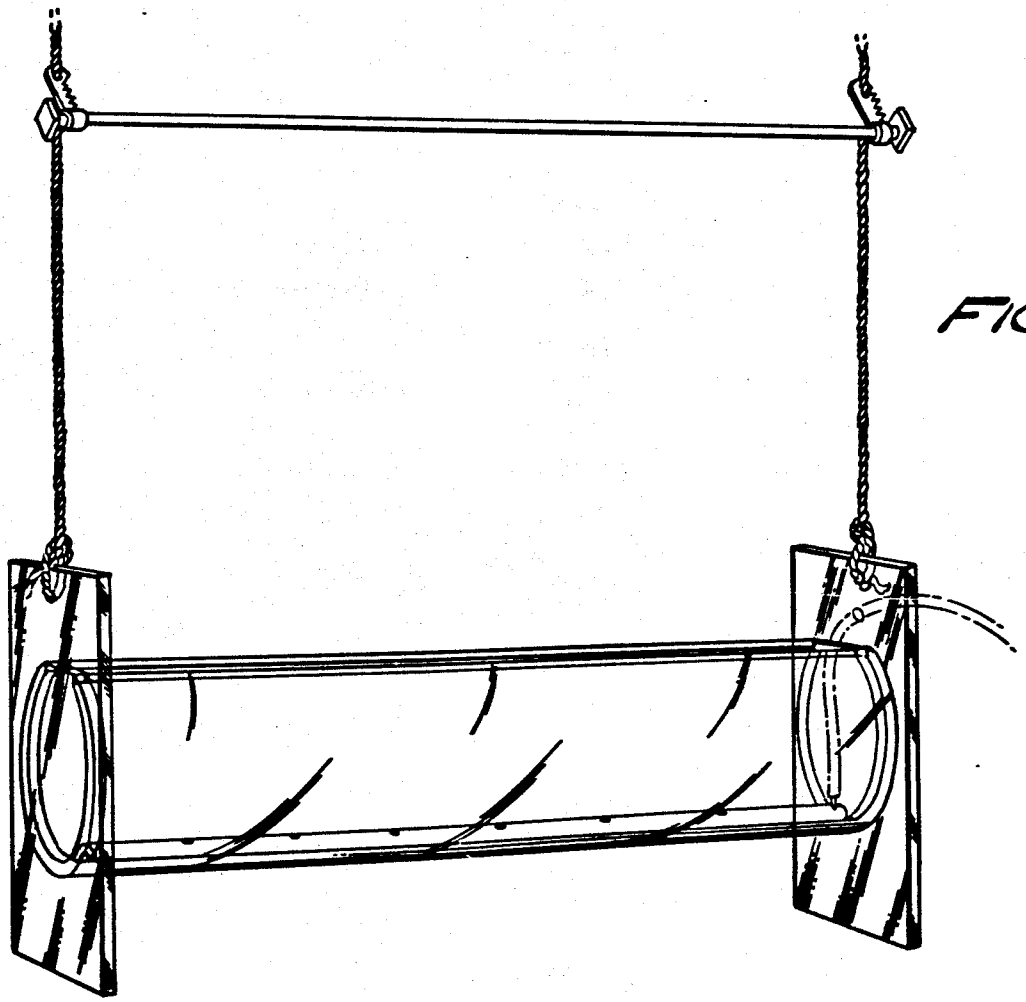

FIG. 2.

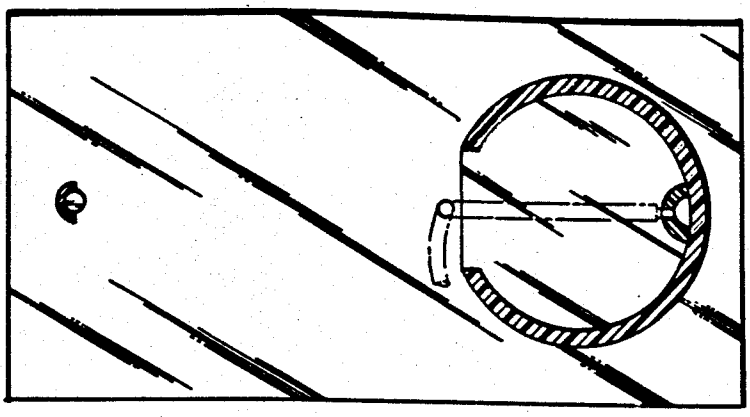

FIG. 4.

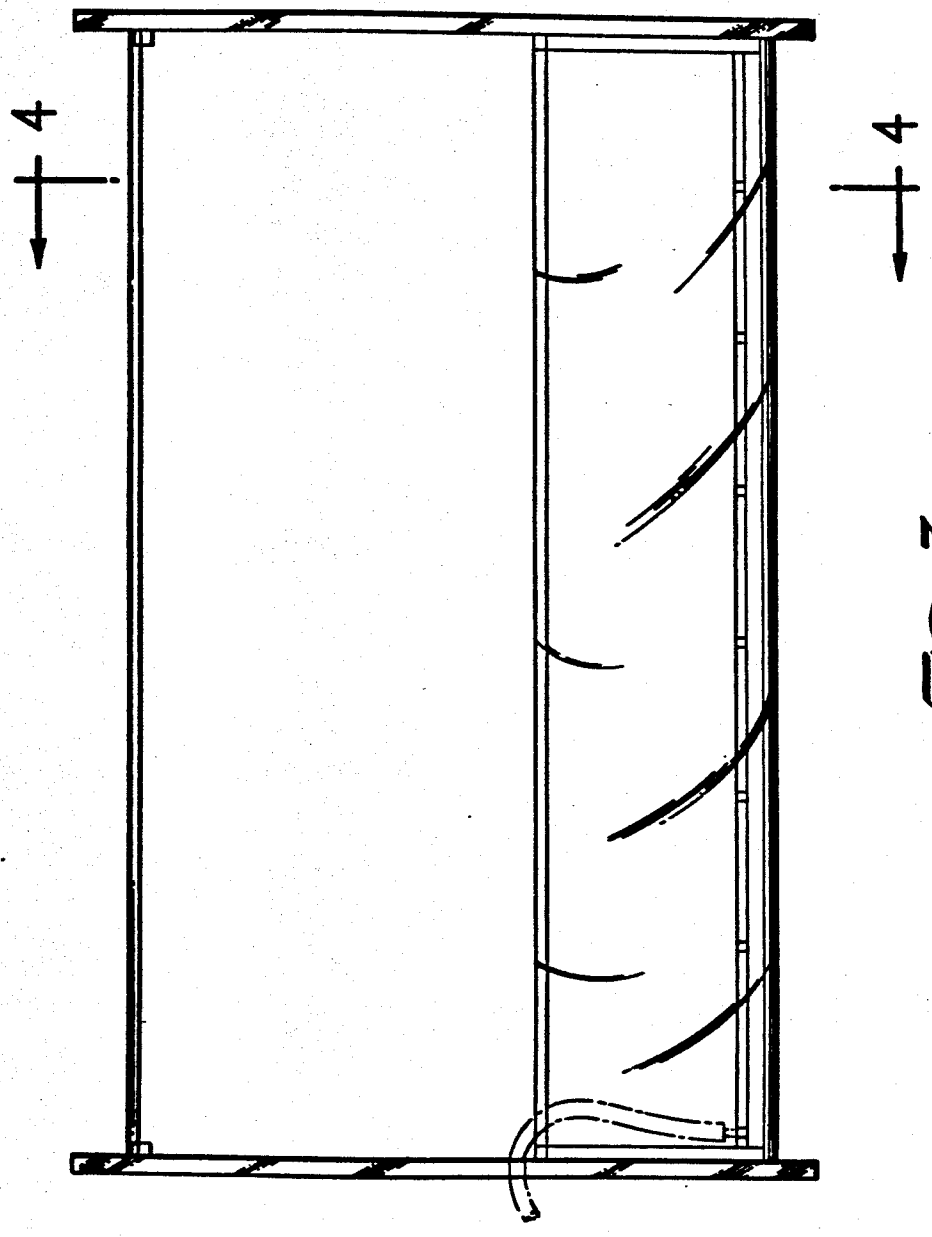


FIG. 3.