(11) Application No. AU 2007201125 B2

(19) AUSTRALIAN PATENT OFFICE

(54) Title

A waste heat boiler (WHB) system

(51)[6] International Patent Classification(s)

F22B 33/00 (2006.01) 6BHAU F22B

F22B 33/14 (2006.01) 33/14

F22B 33/00 20060101ALI2007041

20060101AFI2007041 6BHAU

(21) Application No: 2007201125 (22) Application Date: 2007.03.15

(30) Priority Data

(31) Number	(32) Date	(33) Country
2006901370	2006.03.17	AU

(43) Publication Date : 2007.10.04

(43) Publication Journal Date : 2007.10.04

(71) Applicant(s)

Downer Energy Systems Pty Ltd

(72) Inventor(s)

Ford, Martin

(74) Agent/Attorney

Eagar & Buck, Suite 21, 36 Agnes St., Fortitude Valley, QLD, 4006

(56) Related Art

US 2006/042249 A

US 5906178 A

US 5109665 A

2007201125 15 Mar 2007

ABSTRACT

The present invention generally relates to a waste heat boiler (WHB) system which can be applied to a multitude of boiler designs. The WHB system may or may not have supplementary and/or fresh air firing. The system includes an intermediate pressure (IP) flash tank, and an IP boiler/evaporator system for receiving both fresh feedwater and recycled water of lesser quality than the feedwater from the IP flash tank. A high pressure (HP) boiler/evaporator system typically supplies blowdown to the IP flash tank. Under steady state operating conditions of the WHB system, the flow rate of received feedwater is less than the flow rate of received water from the IP flash tank. In some instances, the flow rate of received feedwater is about zero so that the second boiler/evaporator system uses negligible amounts of the feedwater.

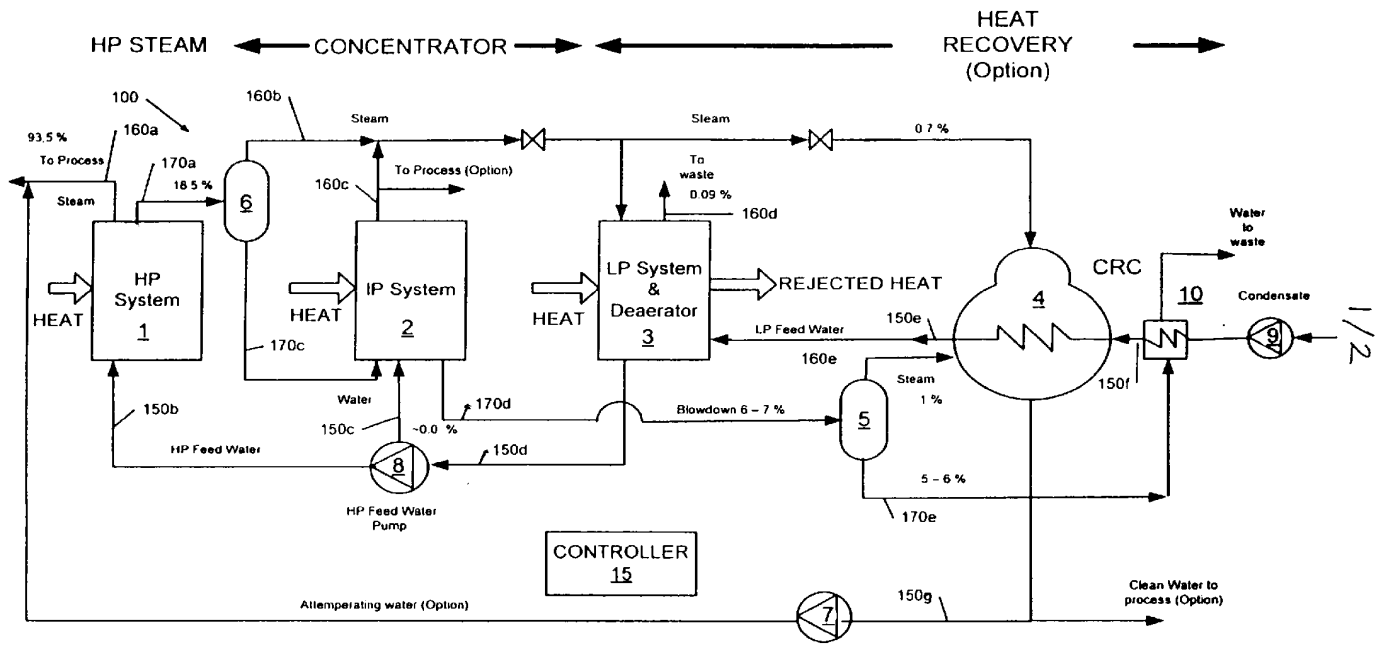
HP STEAM
CONCENTRATOR
HEAT RECOVERY (Option)
100
160a
160b
93.5 %
To Process
170a
18.5 %
Steam
6
160c
To Process (Option)
Steam
Steam
0.7 %
To waste
0.09 %
160d
HP System 1
HEAT
IP System 2
HEAT
LP System & Deaerator 3
HEAT
REJECTED HEAT
CRC
4
10
Water to waste
Condensate
9
1/2
150e
LP Feed Water
160e
150f
Steam
1 %
5
Blowdown 6 – 7 %
5 – 6 %
170e
170c
150b
Water
150c
~0.0 %
170d
150d
HP Feed Water
8
HP Feed Water Pump
CONTROLLER 15
Attemperating water (Option)
7
150g
Clean Water to process (Option)

Figure 1

2007201125 15 Mar 2007

AUSTRALIA
PATENTS ACT 1990

COMPLETE SPECIFICATION
STANDARD PATENT

A WASTE HEAT BOILER (WHB) SYSTEM

The following statement is a full description of this invention including the best method of performing it known to me:

2007201125 15 Mar 2007

A WASTE HEAT BOILER (WHB) SYSTEM

TECHNICAL FIELD

The present invention generally relates to Waste Heat Boilers (WHBs).

BACKGROUND

A waste heat boiler (WHB) is a heat exchanger that recovers waste heat from industrial plants such as power stations, for example. The waste heat will be supplied to the WHB from the industrial plant and, in turn, the WHB generates output steam from the waste heat to supply other processes. A Heat Recovery Steam Generator (HRSG) is a type of WHB which recovers heat from the exhaust of a gas turbine.

The WHB can typically include three boiler (drum) and evaporator units (i.e. boiler/evaporators): a high pressure (HP) boiler/evaporator, an intermediate pressure (IP) boiler/evaporator, and a low pressure (LP) boiler/evaporator. Each boiler/evaporator separates steam from water through evaporation. In some applications, an economizer for heating feedwater supplied to the boiler/evaporator and a superheater for further heating steam supplied from the boiler/evaporator are also provided.

A concentration of water impurities occurs in each boiler/evaporator as a result of evaporation. Excessive levels of these impurities in the boiler/evaporator can undesirably cause foaming problems and high levels of boiler/evaporator corrosion. Whilst higher efficiency of the WHB can be achieved by producing output steam of higher temperature and pressure, impurity levels may exceed practical limits under these conditions which can undesirably exacerbate these problems.

Traditionally, feedwater having very low impurity levels is provided to each boiler/evaporator to provide continuous blowdown of the impurities from each boiler/evaporator and thereby control the resulting impurity levels in the

2007201125 15 Mar 2007

boiler/evaporators. Blowdown is the draining, under pressure, of the water side of a boiler/evaporator to typically reduce or remove the unwanted impurities. Acceptable feedwater impurity levels vary depending on the respective boiler/evaporator pressure and therefore, for some boiler/evaporator operating pressures, the feedwater is required to be chemically pretreated before being supplied to the boiler/evaporator which can be a costly process. In practice, the blowdown rate is typically between 1 and 4% of feedwater rate of boiler/evaporators in order to comply with recommended (or mandated) impurity limits, however, the selected blowdown rate also depends upon the costs of disposing of (or dumping) the blowdown from each boiler/evaporator.

It is an object of the present invention to provide a WHB system for reducing blowdown disposal costs.

It is another object of the present invention to provide a WHB system which can use feedwater of lesser quality (i.e. having higher impurity levels).

SUMMARY OF THE INVENTION

According to one aspect of the present invention, there is provided a Waste Heat Boiler (WHB) system including:

a first boiler/evaporator system;

a second boiler/evaporator system for receiving water from the first boiler/evaporator system and for receiving feedwater, said water from the first boiler/evaporator system being of lesser quality than the feedwater; and

control means for controlling the WHB system so that, under some operating conditions, between 10% and 100% of water received by the second boiler/evaporator system is said water from the first boiler/evaporator system.

The lesser quality water supplied to the second boiler/evaporator system from the first boiler/evaporator system is re-used instead of being directly dumped. The rate of higher quality fresh feedwater (i.e. containing lesser impurity

2007201125 15 Mar 2007

levels) required to be received by the second boiler/evaporator system is reduced, as lesser quality water is received from the first boiler/evaporator system in place of further feedwater which would otherwise need to be received by the second boiler/evaporator system.

In addition, feedwater supplied to the first boiler/evaporator system can be of comparatively lesser quality and have higher impurity levels, as this upstream feedwater can be supplied at a greater rate so that sufficient water is supplied from the first to the second boiler/evaporator system.

The control means may be configured so that, under some operating conditions of the WHB system, the flow rate of received feedwater is less than the flow rate of said received water from the first boiler/evaporator system. Said some operating conditions may be steady state operating conditions. The flow rate of received feedwater may be reduced so that the second boiler/evaporator system receives insubstantial amounts of the feedwater relative to said water of lesser quality. The flow rate of received feedwater may approach zero so that the second boiler/evaporator system receives negligible amounts of the feedwater relative to said water of lesser quality.

The WHB system may further include a condenser system configured to condense steam output from the first and/or second boiler/evaporator systems. Under steady state operating conditions of the WHB system, about half of the water provided to the second boiler/evaporator system may be evaporated as steam.

The WHB system may further include a third boiler/evaporator system for supplying blowdown to the first boiler/evaporator system. Under steady state operating conditions of the WHB system, the output rate of the blowdown supplied from the third boiler/evaporator system may be about 30% of the rate of output steam supplied from the third boiler/evaporator system. The WHB system may further include a tank for receiving blowdown from both the first and third boiler/evaporator systems.

2007201125 15 Mar 2007

The first boiler/evaporator system may include an intermediate pressure (IP) flash tank, the second boiler/evaporator system may include an IP boiler/evaporator system, and the third boiler/evaporator system may include a higher pressure (HP) boiler/evaporator system which operates, under steady state conditions, at a higher pressure than both the IP boiler/evaporator system and IP flash tank. The WHB system may further include a low pressure (LP) boiler/evaporator system for operating at a lower pressure than the IP boiler/evaporator system, and for receiving steam from the IP boiler/evaporator system and/or the IP flash tank.

The LP boiler/evaporator system may include a deaerator for receiving:

feedwater; and

said steam from the IP boiler/evaporator system and/or the IP flash tank deaerator which, in turn, transfers heat to the received feedwater.

The LP boiler/evaporator system may include a LP boiler/evaporator and the deaerator is integral with the LP boiler/evaporator. The WHB system may further include a LP flash tank for receiving blowdown from the IP boiler/evaporator system. The WHB system may further include a condenser system for receiving and condensing steam from the LP flash tank. The WHB system may further include a cooler for cooling waste water output from the LP flash tank.

The HP boiler/evaporator system may include:

a HP boiler/evaporator; and

at least one economizer for heating feedwater supplied to the HP boiler/evaporator.

The at least one economizer may include a plurality of enconomizers and the WHB system further includes means for controlling the feedwater to bypass at least one of the enconomizers.

2007201125 15 Mar 2007

The control means may include a plurality of valves for controlling fluid flow through pipes. The control means may further include a controller for controlling the operation of the control valves.

According to another aspect of the present invention, there is provided a boiler/evaporator system of a waste heat boiler (WHB) system, the boiler/evaporator system being configured to:

receive feedwater; and

receive water of lesser quality than the feedwater;

wherein, under some operating conditions of the WHB system, between 10% and 100% of the received water is said received water of lesser quality.

According to another aspect of the present invention, there is provided a method for conserving higher quality water used in a waste heat boiler (WHB) system, the method including the steps of:

receiving feedwater in a boiler/evaporator system; and

receiving, in the boiler/evaporator system, water of lesser quality than the feedwater;

wherein between 10% and 100% of the received water is said received water of lesser quality.

BRIEF DESCRIPTION OF THE DRAWINGS

Preferred features, embodiments and variations of the invention may be discerned from the following Detailed Description which provides sufficient information for those skilled in the art to perform the invention. The Detailed Description is not to be regarded as limiting the scope of the preceding Summary of the Invention in any way. The Detailed Description will make reference to a number of drawings as follows:

Figure 1 is a block diagram of a WHB system in accordance with an embodiment of the present invention; and

2007201125 15 Mar 2007

Figure 2 is a schematic diagram of the WHB system of Figure 1 showing the fluid flow in the system.

DETAILED DESCRIPTION OF PREFERRED EMBODIMENTS

According to an embodiment of the present invention, there is provided a Waste heat boiler (WHB) system 100 as shown in Figures 1 and 2. The WHB system 100 includes a WHB which, in turn, includes a high pressure (HP) boiler/evaporator system 1, an intermediate pressure (IP) boiler/evaporator system 2 and a low pressure (LP) boiler/evaporator system 3. Under steady state conditions, the HP boiler/evaporator system 1 generally operates in the pressure range above the IP boiler/evaporator system which, in turn, generally operates in the pressure range above the LP boiler/evaporator system. The pressure of each system 1,2,3 is generally limited by the quality of supply water.

The WHB system 100 includes a complex network of elements which are interconnected together in fluid communication using pipes. The pipes transport feedwater 150, steam 160 and blowdown 170 between the elements of the WHB system 100. The WHB system 100 includes control valves (e.g. 106) to control the flow rate of fluid flowing through the pipes, and a controller 15 (executing software) which is configured to automatically control the further opening and closing of the control valves so that the WHB system 100 operates as required.

Referring to Figure 1, the WHB system 100 generally includes a high pressure (HP) boiler/evaporator system, a concentrator system, a heat recovery system and an emergency blowdown system (shown in Fig. 2 only) as described in detail below.

2007201125 15 Mar 2007

HP BOILER/EVAPORATOR SYSTEM

Referring to Figure 2, the HP boiler/evaporator system 1 includes a HP boiler/evaporator 102 and a plurality of cascaded HP economizers 11 for heating feedwater 150a supplied to the boiler/evaporator 102. The cascaded economizers 11 are configured so that at least one (e.g. three) of the downstream economizers 11, located upstream from the HP boiler/evaporator 102, can be bypassed during certain operating phases of the WHB system 100. Bypassing and switching in economizers 11 is performed to enable control of the pressure of the HP boiler/evaporator 102 and steaming output rate of HP steam 160a. Heat is extracted from the exhaust gas 104 of the HP economizers 11.

Feedwater 150b is supplied to the economizers 11 from a high pressure and intermediate pressure (HP & IP) feedwater (FW) pump system 8 which, in turn, is supplied feedwater 150d from low pressure (LP) system 3. HP steam 160a is supplied from the HP boiler/evaporator system 1 to a process or plant which makes use of the steam 160a.

Furthermore, HP boiler/evaporator system 1 provides primary blowdown 170a to an intermediate pressure flash tank (IPFT) 6. Under steady state operating conditions, the output rate of primary blowdown 170a is relatively high, and typically up to 30% of the rate of output steam 160a. This enables sufficient control of impurities (dissolved solids, caustic and chloride levels etc) in the HP boiler/evaporator system 1 to within acceptable limits for the operating pressures and temperatures.

The HP boiler/evaporator system 1 can also provide emergency blowdown 170b into an emergency blowdown tank 12. The HP boiler drum 102 of the HP boiler/evaporator system 1 is adequately sized to accommodate high efficiency steam separation by both primary and secondary steam scrubbers for all possible operating modes of the WHB system 100.

2007201125 15 Mar 2007

CONCENTRATOR SYSTEM

As can best be seen in Figure 1, the concentrator system includes the IPFT 6, and IP boiler/evaporator system 2 which receives blowdown 170c from the IPFT 6 so that energy in the blowdown 170a,c can be recovered.

The IPFT 6 is a type of boiler/evaporator system which is not supplied with feedwater 150 and, in use, flashes the received high energy blowdown 170a from the HP boiler/evaporator system 1 to form a two phase mixture of steam 160b and liquid 170c at an intermediate pressure. The 'clean' output steam 160b from the IPFT 6 is fed to a LP deaerator 108 of the LP boiler/evaporator system 3 where it liberates energy to supplied feedwater 150e, thereby performing useful work. In some applications, IP steam 160b,c may also be used as process steam in conjunction with the HP steam 160a.

The IPFT 6 passes the water phase blowdown 170c to the IP boiler/evaporator system 2 and can replace 50% to 100% of the feedwater 150c fed to the IP boiler/evaporator system 2, depending upon the opeational phase of the WHB system 100. The blowdown water 170c is of lesser quality than the feedwater 150c. The IP boiler/evaporator system 2 acts as a concentrator by evaporating 'clean' steam 160c for use in the deaerator 108 of the LP boiler/evaporator system 3, and by concentrating the blowdown 170d for discharge to the heat recovery system described in detail below.

Whilst the IP boiler/evaporator system 2 may also be supplied feedwater 150c, via a an intermediate take–off from the boiler feedwater pump 8, under WHB steady state operating conditions the IP boiler/evaporator system 2 will operate with little feedwater 150c as the majority of input water to the IP boiler/evaporator system 2 is the blowdown 170c. Under this WHB steady state mode of operation, control valves 106 regulating the flow of feedwater 150c from the pump 8 to the IP boiler/evaporator system 2 are quite trim (i.e. nearly closed) but can be further opened by a control system responsive to any disturbance in the rate of blowdown 170c input to the IP boiler/evaporator system 2.

2007201125 15 Mar 2007

During start up and shutdown operational phases of the WHB system 100, the IP boiler/evaporator system 2 receives more feedwater 150c and less blowdown 170c. The operating pressure of the IP boiler/evaporator system 2 is controlled based upon the "pinch points" (i.e. difference between gas temperature and fluid temperature) of the IP boiler/evaporator system 2.

The IP boiler/evaporator system 2 evaporates the blowdown 170c to form steam 160c which is combined with flash steam 160b and provided to the LP deaerator 108 of the LP boiler/evaporator system 3. In this manner, up to 60% of the HP blowdown 170a can evaporated and reclaimed.

Operation of the concentrator system

As previously discussed, the IP boiler/evaporator system 2 may source more feedwater 150c than blowdown 170c during startup, shutdown, or transient operational phases of the WHB system 100, or should the need be determined at direction of the WHB system operator. As per normal boiler/evaporator system safety practice, the IP feedwater 150c can be supplied at a rate to accommodate the maximum evaporation rate of the IP boiler/evaporator system 2 (with appropriate margin), under any operating conditions of the WHB system 100. However, as the WHB steady state mode of operation is reached, the HP boiler/evaporator blowdown 170a is increasingly diverted to the IP Flash Tank 6. As the flow rate of HP boiler/evaporator blowdown 170a to the IP Flash Tank 6 increases, an IP boiler/evaporator controller reduces the input IP feedflow 150c. The IP boiler/evaporator system 2 then starts to act in its intended operating mode as a concentrator of the received blowdown 170c.

As previously discussed, HP blowdown 170a is provided to the IP flash tank 6. The IP flash tank 6 flashes the high energy blowdown to form a two phase flow of blowdown water 170c and steam 160b. Steam 160b is liberated in the IP flash tank 6 as a result of this pressure reduction process and is vented to the LP boiler/evaporator system 3. Water collected in the bottom of the IP

2007201125 15 Mar 2007

flash tank 6 is provided as blowdown 170c to the IP boiler/evaporator system 2.

Within the IP boiler/evaporator system 2, approximately 50% of the water provided from blowdown 170c and feedwater 150c is typically evaporated under steady state conditions. The remaining liquefied water leaves the IP boiler/evaporator system 2 as IP blowdown 170d which is high in dissolved solids and caustic. Steam 160b generated by the IP boiler/evaporator system 2 is 'cleaned' by a two stage steam separation process using baffling and demisters (i.e. primary and secondary steam scrubbers). Again the boiler drum of the IP boiler/evaporator system 2 is amply sized to accommodate for the relatively high blowdown 170c flow rate (nominally up to 40% of the main steam 160a rate), water exit velocities, and any potential foaming or carryover.

Under steady state operating conditions, the flow rate of the blowdown 170c to the IP boiler/evaporator system 2 may be zero and all water may be sourced from the feedwater 150c, or visa versa.

HEAT RECOVERY SYSTEM

A heat recovery system is optionally provided to recover useful energy and water from the blowdown 170d from the IP boiler/evaporator system 2. Referring to Figure 1, the heat recovery system includes the LP boiler/evaporator system 3, a condensate recovery condenser (CRC) 4, a LP flash tank (LPFT) 5, and a blowdown drain cooler (BDC) 10 as explained in detail below.

Steam 160b,c evaporated from the concentrator system is supplied to the LP deaerator 108 of the LP boiler/evaporator system 3 where the steam 160b,c condenses, thereby liberating energy and recovering waste heat from steam 160b,c output from the concentrator. The deaerator 108 may be integral with or independent of a LP boiler/evaporator 110 of the LP boiler/evaporator system 3, depending on the source of heat. Steam generated within the LP

2007201125 15 Mar 2007

boiler/evaporator 110 passes to the deaerator 108, and minimal concentration of dissolved solids occurs within the LP boiler/evaporator 110 as a dilution effect is achieved by the introduction of the 'clean' steam 160b,c introduced from the concentrator system.

The LP deaerator 108 continually vents generated steam 160d, and is fed with LP feedwater 150e carrying energy which has been received, via the CRC 4 and LPFT 5, from blowdown 170d of the IP boiler/evaporator system 2.

The LPFT 5 separates IP blowdown 170d into flash steam 160e and water drainate blowdown 170e. The steam 160e is later condensed within the CRC 4 for re-use. Blowdown 170d from the IP boiler/evaporator system 2 is throttled to a pressure slightly above that of the CRC 4, with the flash steam 160e undergoing a process of droplet separation to ensure that steam 160e exiting the LPFT 5 does not carry contaminants in excess of required concentrations. The LPFT 5 performs the droplet separation under the maximum expected blowdown 170d rate from the IP boiler/evaporator system 2 at maximum steam 160c evaporation rate. The normal upper bound for the IP boiler/evaporator system 2 blowdown 170d is about 20% of the output steam 160c.

The WHB system 100 includes a blowdown drain cooler (BDC) 10 which receives and cools blowdown 170e separated in the LPFT 5. The blowdown 170e is cooled to a temperature sufficient for dumping and, in the process, heat is transferred from the blowdown 170e to feedwater 150f pumped by condensate pump 9 to the CRC 4. Feedwater 150f is heated within CRC 4 by heat transferred from flash steam 160e and is then fed as feedwater 150e to deaerator 108.

The CRC 4 condenses the "clean" (i.e. high purity) flash steam 160e generated in the LP Flash Tank 5 which, in turn, is pumped to a storage tank as spray water 150g using the spray water pump 7. The clean condensed steam 160e (or spray water 150g) is typically of such high quality that it can

2007201125 15 Mar 2007

be used in place of demineralised water. In some embodiments, IP steam 160b,c may be combined with flash steam 160e for input to the CRC 4.

The spray water 150g can also be pumped by spray water pump 7 to attemporate output steam 160a provided to the process.

EMERGENCY BLOWDOWN SYSTEM

Referring to Figure 2, the WHB system 100 includes an emergency blowdown system which, in turn, includes emergency blowdown tank 12. Blowdown 170b, 170f can be provided to the emergency blowdown tank 12 from the respective HP and IP boiler/evaporator systems 1, 2 during startup and shutdown operational modes of WHB system 100. The emergency blowdown tank 12 can also be utilised in the event that any elements of the heat recovery system (e.g. LPFT 5) are out of service or in the event of (transient) disturbance conditions in the boiler/evaporator systems 1,2.

The emergency blowdown system includes a silencer which is fitted to an upper vent defined in the emergency blowdown tank 12. The emergency blowdown tank 12 operates at atmospheric pressure and releases flash steam to the atmosphere via the upper vent and silencer. Contaminated water which collects in the base of the emergency blowdown tank 12 is discharged to a waste water pit. If necessary, drain waste water from the emergency blowdown tank 12 may be cooled by feedwater 150.

A person skilled in the art will appreciate that many embodiments and variations can be made without departing from the ambit of the present invention.

The HP, IP and LP boiler/evaporator systems 1, 2, 3 may include an economizer system for heating feedwater supplied to the boiler/evaporator system and a superheater system for further heating steam supplied from the boiler/evaporator system, depending on the application.

2007201125 15 Mar 2007

In the preferred embodiment, a controller 15 was provided for automatically controlling the operation of the control valves. In an alternative embodiment, an operator may manually adjust the control valves.

In compliance with the statute, the invention has been described in language more or less specific to structural or methodical features. It is to be understood that the invention is not limited to specific features shown or described since the means herein described comprises preferred forms of putting the invention into effect. The invention is, therefore, claimed in any of its forms or modifications within the proper scope of the appended claims appropriately interpreted by those skilled in the art.

2007201125 15 Mar 2007

The claims defining the invention are as follows:

1. A waste heat boiler (WHB) system including:

a first boiler/evaporator system;

a second boiler/evaporator system for receiving water from the first boiler/evaporator system and for receiving feedwater, said water from the first boiler/evaporator system being of lesser quality than the feedwater; and

control means for controlling the WHB system so that, under some operating conditions, between 10% and 100% of water received by the second boiler/evaporator system is said water from the first boiler/evaporator system.

2. A WHB system as claimed in claim 1 wherein the control means is configured so that, under some operating conditions of the WHB system, the flow rate of received feedwater is less than the flow rate of said received water from the first boiler/evaporator system.

3. A WHB system as claimed in claim 1, further including a condenser system configured to condense steam output from the first and/or second boiler/evaporator systems.

4. A WHB system as claimed in claim 1 wherein, under steady state operating conditions of the WHB system, about half of the water provided to the second boiler/evaporator system is evaporated as steam.

5. A WHB system as claimed in claim 1, further including a third boiler/evaporator system for supplying blowdown to the first boiler/evaporator system.

6. A WHB system as claimed in claim 5 wherein, under steady state operating conditions of the WHB system, the output rate of the blowdown supplied from the third boiler/evaporator system is about 30% of the rate of output steam supplied from the third boiler/evaporator system.

2007201125 15 Mar 2007

7. A WHB system as claimed in claim 5, further including a tank for receiving blowdown from both the first and third boiler/evaporator systems.

8. A WHB system as claimed in claim 5, wherein the first boiler/evaporator system includes an intermediate pressure (IP) flash tank, the second boiler/evaporator system includes an IP boiler/evaporator system, and the third boiler/evaporator system includes a higher pressure (HP) boiler/evaporator system which operates, under steady state conditions, at a higher pressure than both the IP boiler/evaporator system and IP flash tank.

9. A WHB system as claimed in claim 8, further including a low pressure (LP) boiler/evaporator system for operating, under steady state operating conditions, at a lower pressure than the IP boiler/evaporator system, and for receiving steam from the IP boiler/evaporator system and/or the IP flash tank.

10. A WHB system as claimed in claim 9, wherein the LP boiler/evaporator system includes a deaerator for receiving:

feedwater; and

said steam from the IP boiler/evaporator system and/or the IP flash tank deaerator which, in turn, transfers heat to the received feedwater.

11. A WHB system as claimed in claim 10, wherein the LP boiler/evaporator system includes a LP boiler/evaporator and the deaerator is integral with the LP boiler/evaporator.

12. A WHB system as claimed in claim 8, further including a LP flash tank for receiving blowdown from the IP boiler/evaporator system.

13. A WHB system as claimed in claim 12, further including a condenser system for receiving and condensing steam from the LP flash tank.

14. A WHB system as claimed in claim 12, further including a cooler for cooling waste water output from the LP flash tank.

2007201125 15 Mar 2007

15. A WHB system as claimed in claim 8, wherein the HP boiler/evaporator system includes:

a HP boiler/evaporator; and

at least one economizer for heating feedwater supplied to the HP boiler/evaporator.

16. A WHB system as claimed in claim 15, wherein said at least one economizer includes a plurality of enconomizers and the WHB system further includes means for controlling the feedwater to bypass at least one of the enconomizers.

17. A boiler/evaporator system of a waste heat boiler (WHB) system, the boiler/evaporator system being configured to:

receive feedwater; and

receive water of lesser quality than the feedwater;

wherein, under some operating conditions of the WHB system, between 10% and 100% of the received water is said received water of lesser quality.

18. A boiler/evaporator system as claimed in claim 17 wherein, under some operating conditions of the WHB system, the flow rate of received feedwater is less than the flow rate of said received water of lesser quality.

19. A method for conserving higher quality water used in a waste heat boiler (WHB) system, the method including the steps of:

receiving feedwater in a boiler/evaporator system; and

receiving, in the boiler/evaporator system, water of lesser quality than the feedwater;

wherein between 10% and 100% of the received water is said received water of lesser quality.

20. A method as claimed in claim 19 wherein, under some operating conditions of the WHB system, the flow rate of received feedwater is less than the flow rate of said received water of lesser quality.

2007201125 15 Mar 2007

21. A system as claimed in any one or more of claims 1 to 18, and substantially as herein described with reference to the accompanying drawings.

Dated this 15th day of March 2007

DOWNER ENERGY SYSTEMS PTY LTD

by my attorneys

Eagar & Buck Patent and Trade Mark Attorneys

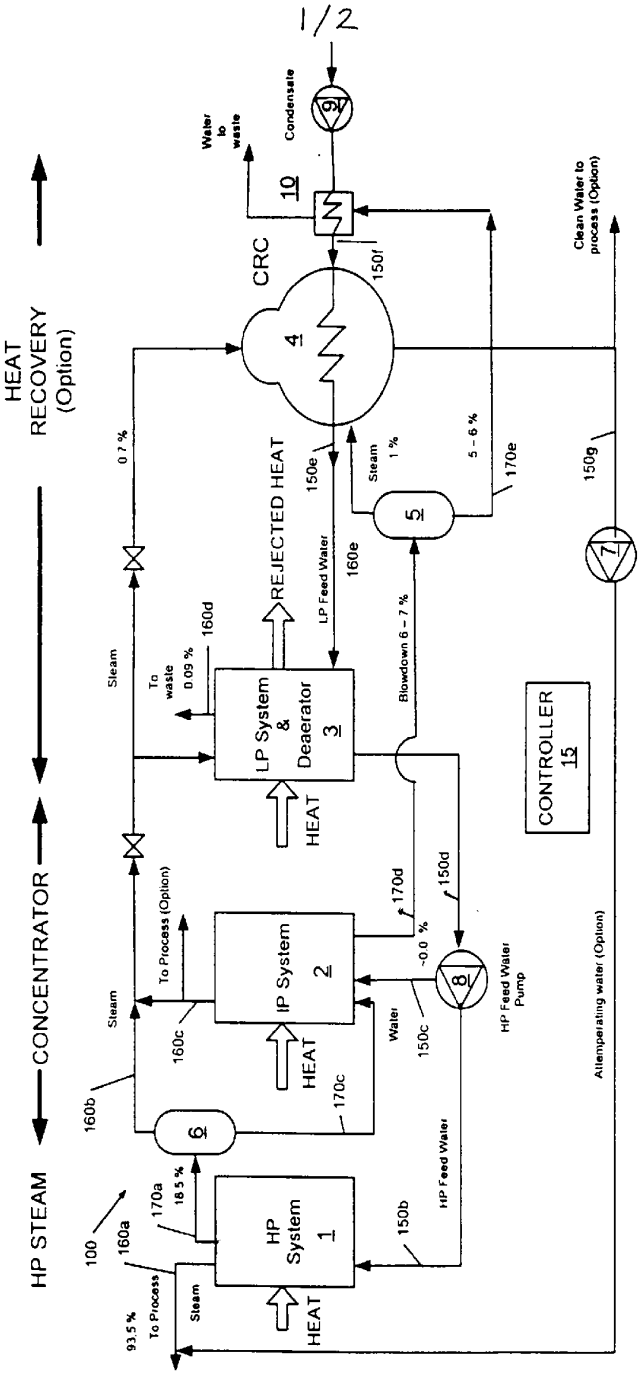
1/2
HEAT RECOVERY (Option)
CONCENTRATOR
HP STEAM
Water to waste
Condensate
9
10
CRC
4
150f
Clean Water to process (Option)
150g
7
REJECTED HEAT
150e
160e
Steam 1 %
5 - 6 %
170e
5
0.7 %
Steam
To waste 0.09 %
160d
LP System & Deaerator 3
LP Feed Water
Blowdown 6 - 7 %
HEAT
CONTROLLER 15
170d
150d
-0.0 %
8
HP Feed Water Pump
To Process (Option)
IP System 2
Steam
160c
Water
150c
HEAT
170c
160b
6
Attemperating water (Option)
HP System 1
170a
18.5 %
100
160a
150b
HP Feed Water
93.5 %
To Process
Steam
HEAT

Figure 1

2007201125 15 Mar 2007

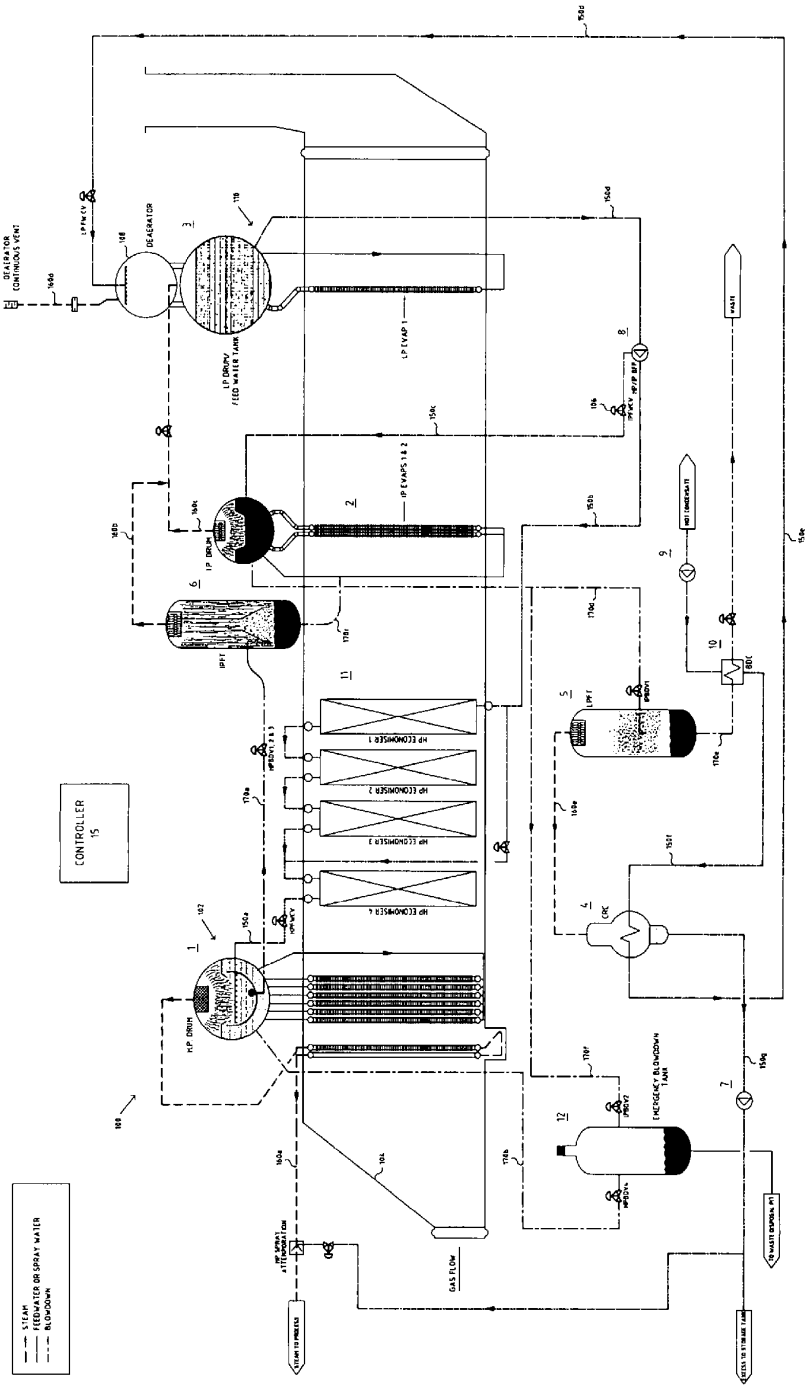

FIGURE 2