(19) Europäisches Patentamt
European Patent Office
Office européen des brevets

(11) **EP 3 816 558 A1**

(12) **EUROPEAN PATENT APPLICATION**

(43) Date of publication:
05.05.2021 Bulletin 2021/18

(51) Int Cl.:
F28D 9/00 *(2006.01)* ***F28F 9/00*** *(2006.01)*

(21) Application number: **20204550.6**

(22) Date of filing: **29.10.2020**

(84) Designated Contracting States:
AL AT BE BG CH CY CZ DE DK EE ES FI FR GB GR HR HU IE IS IT LI LT LU LV MC MK MT NL NO PL PT RO RS SE SI SK SM TR
Designated Extension States:
BA ME
Designated Validation States:
KH MA MD TN

(30) Priority: **04.11.2019 DK PA201901288**

(71) Applicant: **Danfoss A/S**
6430 Nordborg (DK)

(72) Inventors:
- **PETERSEN, Jes**
  6430 Nordborg (DK)
- **NIELSEN, Helge**
  6430 Nordborg (DK)

(74) Representative: **Stevens, Brian**
Danfoss A/S
Intellectual Property
Nordborgvej 81
6430 Nordborg (DK)

(54) **PLATE-AND-SHELL HEAT EXCHANGER AND A CHANNEL BLOCKING PLATE FOR A PLATE-AND-SHELL HEAT EXCHANGER**

(57) The invention relates to a plate-and-shell heat exchanger apparatus and a channel blocking plate for a plate-and-shell heat exchanger. The heat exchanger comprises a shell and a plurality of heat transfer plates within the shell. The plates form fluidly connected first cavities for providing a first fluid flow path for a first fluid flow. The shell forms a second cavity in which the plates are arranged and a second fluid flow path is provided for a second fluid flow, separated from the first fluid flow path by the plates. The heat exchanger comprises means for reducing detrimental bypass flows within the heat exchanger.

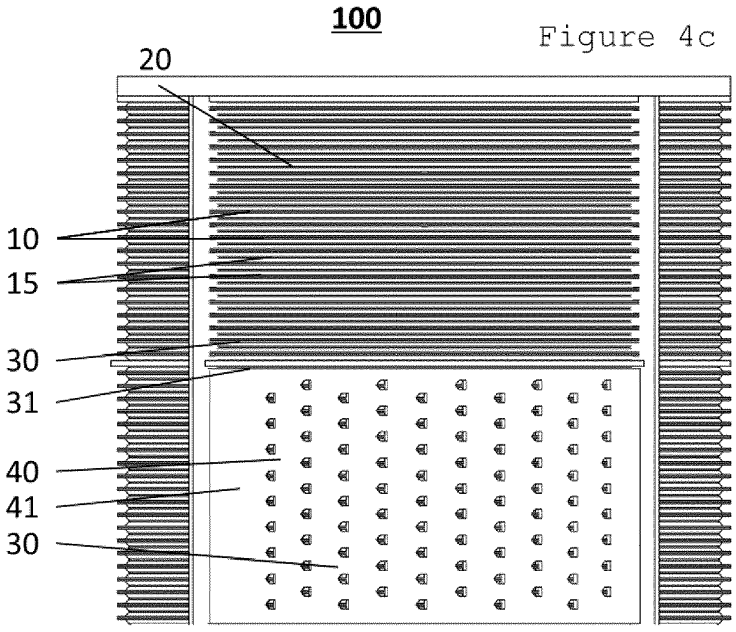

Figure 4c

EP 3 816 558 A1

Description

[0001] The present invention relates to a plate-and-shell heat exchanger and a channel blocking plate for a plate-and-shell heat exchanger.

[0002] Plate-and-shell heat exchangers comprise a plurality of stacked structured plates positioned within a shell or casing. The plates are connected in pairs such that a first fluid flow path for a first fluid is provided at least partially within the connected pairs of plates. The pairs of connected plates are designed to fluidly connect a first inlet opening to a first outlet opening of the heat exchanger, thereby forming the first fluid flow path. A second fluid flow path for a second fluid is provided outside of the connected pairs of plates and separated from the first fluid flow path by the plates. The second fluid flow path fluidly connects a second inlet opening to a second outlet opening.

[0003] The second fluid enters the shell of the heat exchanger through the second inlet opening and it flows along the complex second fluid flow path inside the shell and out through the second outlet opening. A part of the second fluid bypasses central regions of the heat transfer plates and flows from the second inlet opening to the second outlet opening along radially exterior peripheral regions of the heat transfer plates. This is due to the flow resistance being lower at the peripheral regions than at the central regions of the heat transfer plates. This bypassing of the central regions of the heat transfer plates results in a detrimental distribution of the second fluid and therefore in a problematic suboptimal heat transfer rate.

[0004] This problem is solved by the present invention's heat exchanger according to claim 1 and by a channel blocking plate for a heat exchanger according to claim 10. Further embodiments of the invention are subject of the dependent claims.

[0005] According to the first claim, a plate-and-shell heat exchanger is provided, which comprises a shell and a plurality of heat transfer plates within the shell. The shell and the plates may be of any shape, but a cylindrical or circular shape of the shell and the plates is preferred. The plates form fluidly connected first cavities for providing a first fluid flow path for a first fluid flow. The shell forms a second cavity in which the plates are arranged and a second fluid flow path is provided for a second fluid flow separated from the first fluid flow path by the plates. Two adjacent plates are connected to form an enclosed volume such that a first cavity is provided between them.

[0006] According to the invention, at least one channel blocking plate is provided between at least some of the plates and the shell, said channel blocking plate comprising a plurality of protrusions extending in a direction radially inwards of the shell and reaching between two adjacent plates.

[0007] The protrusions reach into the second fluid flow path and pose as an obstacle or barrier to the second fluid flow in a radially exterior peripheral region of the heat transfer plates. The second fluid flow is thus directed away from the radially exterior peripheral region and towards the central region of the heat transfer plates. The present invention therefore solves the bypass problem and helps increasing the heat transfer rate of the heat exchanger.

[0008] In a preferred embodiment the channel blocking plate extends over 60° ±30°, in particular ±15°, in a circumferential direction of the shell. In another embodiment, the channel blocking plate may extend over 60° ±5° in a circumferential direction of the shell. As the channel blocking plate extends not all way around the heat transfer plates, it allows for sufficient distribution of the second flow between the heat transfer plates while at the same time limiting or blocking any undesired bypass flows.

[0009] The channel blocking plate may extend along the entire inner length of the shell in an axial direction of the shell and/or the channel blocking plate may comprise a plurality of separated, preferably identical, sub-plates. The channel blocking plate may be curved such that it aligns with the curvature of the shell and the curvature of the outside edges of the heat transfer plates. The channel blocking plate may be press-fit, welded or otherwise connected to the heat transfer plates. Alternatively, a loose fit may be provided between the channel blocking plate and the heat transfer plates for ease of manufacture and assembly.

[0010] In another preferred embodiment at least two channel blocking plates are provided which are positioned opposite each other with respect to a central axis of the shell. The two channel blocking plates may thus be spaced apart by 180° around the longitudinal axis of the shell. Such an arrangement of the channel blocking plates provides a simple way of blocking undesired bypass flows through the heat exchanger.

[0011] In another preferred embodiment the protrusions are formed by bent cuts. The channel blocking plate may be made of a sheet metal into which a plurality of cuts has been introduced. The cut areas may then be bent by about 90° to create the protrusion. For fitting the channel blocking plate between the shell and the heat transfer plates it may be bent as a whole, such that its curvature matches the curvature of the shell and the heat transfer plates.

[0012] In another preferred embodiment a sealing plate is positioned radially outwards of the channel blocking plate for sealing openings in the channel blocking plate, wherein the sealing plate is preferably held tight against the channel blocking plate by means of a spring mechanism. The sealing plate may be made from a sheet metal or from a synthetic material. The spring mechanism may be an elastic and/or synthetic component which is positioned between the shell and the sealing plate. The spring mechanism may be formed integrally with the sealing plate. In particular, the sealing plate may be made from a bent sheet metal. The sealing plate and/or the spring mechanism may be compressed upon insertion

between the shell and the channel blocking plate, thus providing a force acting on the channel blocking plate and sealing the openings in the channel blocking plate.

[0013] In another preferred embodiment the protrusions on the at least one channel blocking plate are arranged shifted to each other and/or are arranged in parallel lines and/or the shapes of the protrusions match the shapes of the spaces between two adjacent plates. The shifted arrangement of the protrusions ensures that the distances between adjacent protrusions are sufficiently large to provide structural support during e.g. the manufacture of the channel blocking plate.

[0014] The arrangement of the protrusions in parallel lines which are parallel to the longitudinal axis of the shell facilitates the bending of the channel blocking plate for adapting its shape to the curvature of the shell and of the heat transfer plates.

[0015] Two adjacent protrusions which are spaced apart from each other in an axial direction of the shell may be spaced apart such that four radially most outward portions of four heat transfer plates are positioned between them. When manufacturing the channel blocking plate, the shape of the cuts can be chosen so as to create a close fit between the protrusions and the heat transfer plates. By doing so, the gap between the protrusions and the heat transfer plates can be minimized, thereby minimizing the undesired bypass fluid flow.

[0016] In another preferred embodiment at least two channel blocking plates are provided which are spaced apart from each other in an axial direction of the shell, and which preferably are at least partially separated and/or surrounded by radially extending support structures and/or axially extending support structures.

[0017] In another preferred embodiment the protrusions comprise a rectangular portion and a tapered portion, wherein the tapered portion is positioned radially more inwards of the rectangular portion. The rectangular portion of the protrusion is designed to fit closely to the radially most outward portions of the heat transfer plates. These radially most outward portions of the heat transfer plates may be aligned in parallel to each other and perpendicular to the longitudinal axis of the shell. The tapered portions of the protrusions are designed to fit closely to a radially more inward portion of the heat transfer plates. The radially more inward portion of the heat transfer plates may be at an angle to the radially most outward portion of the heat transfer plate, thereby necessitating an accordingly tapered shape of the protrusion. In a particularly preferred embodiment, the tapered portion is a triangular, arched or circular portion.

[0018] The present invention also relates to a channel blocking plate for a plate-and-shell heat exchanger according to any of claims 1 to 9. The channel blocking plate may feature any or all of the characteristics described above with respect to the heat exchanger and the corresponding channel blocking plate.

[0019] Further details and advantages of the invention are described with reference to the following figures:

- 1a: an exploded view of a plate-and-shell heat exchanger;
- 1b: a sectional schematic view of a plate-and-shell heat exchanger;
- 2a: a detailed view of a heat transfer plate of a plate-and-shell heat exchanger;
- 2b: a detailed sectional view of a plurality of connected heat transfer plates;
- 3a: a schematic view of a first fluid flow path through the heat exchanger;
- 3b: a schematic view of a second fluid flow path through the heat exchanger;
- 4a: a detailed view of a partially manufactured channel blocking plate of the heat exchanger;
- 4b: another detailed view of a partially manufactured channel blocking plate;
- 4c: a partially assembled heat exchanger with visible channel blocking plates;
- 5a: a sectional view of a channel blocking plate positioned between heat transfer plates and a shell of the heat exchanger; and
- 5b: a sectional view showing the positioning of the channel blocking plates within the heat exchanger.

[0020] Figure 1a shows an exploded view of a plate-and-shell heat exchanger 100. The heat exchanger 100 comprises a shell 20 and a plurality of sealed pairs of heat transfer plates 10 within the shell 20.

[0021] The shell 20 may be of a hollow cylindrical shape and the plates 10 may be of a corresponding shape and size such that they can be fit into the shell 20. Other shapes of the shell 20 and plates 10 are also possible, however shapes are preferred, which allow for close positioning of the plates 10 to the shell 20.

[0022] The plates 10 form fluidly connected first cavities 11 for providing a first fluid flow path 12 for a first fluid flow indicated by the corresponding arrows. The first fluid flow enters and leaves the heat exchanger through first inlet and outlet openings 23, 23'. The first cavities 11 are surrounded by two adjacent plates 10, which are connected to each other, as is shown more clearly in figure 1b and as will be described below in more detail. Figure 1b shows the heat exchanger 100 in a sectional view and in an assembled state.

[0023] The plates 10 are connected e.g. by welding or brazing at their rims in pairs, two and two, forming first cavities 11 for a sealed first fluid flow path 12 from a first

inlet opening 23 to a first outlet opening 23'. A plurality of such stacks are stacked and e.g. welded or brazed around the first inlet and outlet openings 23, 23'. The connected first inlet and outlet openings 23, 23' form hollow volumes such as e.g. hollow cylinders reaching through the stack to distribute and circulate a first fluid through the sealed first fluid flow path 12. The second fluid flow path 22 formed outside of the sealed pairs of plates 10 and inside of the shell 20 is connected to second inlet and outlet openings 24, 24'. A second fluid flow enters and leaves the heat exchanger 100 through second inlet and outlet openings 24, 24'.

[0024] The shell 20 forms a second cavity 21 in which the plates 10 are arranged and in which a second fluid flow path 22 for a second fluid flow is provided. The second fluid flow enters and leaves the heat exchanger 100 through second inlet and outlet openings 24, 24'. The second fluid flow path 22 is separated from the first fluid flow path 12 by the plates 10. The heat exchange occurs between the two fluids flowing separated from each other by the plates 10.

[0025] Figure 2a shows a detailed view of a heat transfer plate 10 of the presents invention's plate-and-shell heat exchanger 100. The plate 10 may comprise a circular sheet metal and may comprise bent or otherwise non-planar portions. The plate 10 may separate the first fluid flow path 12 on one side of the plate 10 from the second fluid flow path 22 on the other side of the plate 10. The plate 10 may comprise patterned heat transfer sections on one or on both sides of its generally planar and/or circular sides. The patterned heat transfer sections may be patterned for increasing the contact surface between the plate 10 and the fluids flowing past the plate 10, thereby increasing the heat transfer through the plates 10 and between the fluids. The patterned heat transfer sections may include a mesh and/or stamped or die-cut portions.

[0026] The plates 10 may comprise plate openings 13 for connecting fluidly adjacent plates 10 to each other and to the first inlet and outlet opening 23, 23'. Two adjacent plates 10 may be connected and sealed together by e.g. a welding or brazing along the edge of the plate opening 13 and/or along the outer perimeter of the two plates 10.

[0027] Figure 2b shows a detailed sectional view of a plurality of connected heat transfer plates 10. Two adjacent plates 10 may be connected to each other at their outer circumferences, in particular at annular connection portions 14 of their outer edges. Thus, sealed pairs of connected plates 10 are provided for allowing the first fluid to flow through the first fluid flow path 12 bounded by the connected pairs of plates 10.

[0028] The second fluid flow path 22 is guided between two adjacent pairs of connected plates 10 and separated from the first fluid flow path 12 by the plates 10. It comprises flat, narrow channels between closely positioned plates 10. For efficient heat exchange, the second fluid flow rate in the vertical direction and between the pairs of connected plates 10 as shown in figure 2b is essential. This flow component corresponds in approximation to a radial or tangential component of the second fluid flow with respect to the shell 20.

[0029] As can be seen in figure 2b, in the area of the annular portions 14 of the plates 10, annular bypass cavities 15 are formed, which allow a non-radial component of the second fluid flow in a circumferential direction with respect to the shell 20. This circumferential component of the second fluid flow does not pass between the radially inward space between two pairs of connected plates 10 but only between the radially outward part of two pairs of connected plates 10. Because of the geometry of the bypass cavities 15 and the radially outward annular connection portions 14, the heat transfer rate between the two fluid flows is significantly lower in the bypass cavity 15.

[0030] Figures 3a and 3b are schematic views of parts of the first and second fluid flow paths 12, 22 through the heat exchanger 100. Figure 3a is a cross section perpendicular to the longitudinal axis of the shell 20 and through one pair of connected plates 10. The arrows indicate the first fluid flow path 12 inside one such pair of connected plates 10. The pair of connected plates 10 defines and surrounds a first cavity 11. The fluid flow path 12 enters the pair of connected plates 10 through one of the two plate openings 13 and leaves the pair of connected plates 10 through the other of the two plate openings 13. In between the two openings 13, the first fluid fills the entire first cavity 11 such that heat transfer can occur over the entire or almost entire surface of the pair of connected plates 10. The heat transfer between the first fluid in the first cavity 11 and the second fluid outside the first cavity 11 is hence facilitated. Inside the sealed pair of plates 10, the edges of the two connected plates 10 are welded or brazed or otherwise connected and there is no problem with a bypass.

[0031] Figure 3b shows a part of the second fluid flow path 22 in a cross section of the heat exchanger 100. This time, not the inside of a pair of connected plates 10 is shown, but the space between two such connected pairs of plates 10. The cross section of figure 3b is therefore off-set with respect to the cross-section of figure 3a in an axial or longitudinal direction of the shell 20. The two openings 13 shown in figure 3b connect two neighbouring pairs of connected plates 10 and are part of the first fluid flow path 12 passing there through.

[0032] The second fluid flow path 22 fills the second cavity 21. The second cavity 21 is bounded by the inside of the shell 20, the outsides of the pairs of connected plates 10, one of which is shown in figure 3b and possibly further structures contained within the shell 20. The second flow path 22 enters the shell 20 through the second inlet and outlet openings 24, 24', which may be positioned on opposite sides of the shell surface.

[0033] A part of the second flow passes in a mostly radial direction between the two second openings 24, 24'. However, as the bypass cavity 15 is present at the

outer circumference of the second cavity 21, another part of the second flow passes in a mostly circumferential direction between the two second openings 24, 24' and without entering the narrow space between two adjacent pairs of connected plates 10. Therefore, at the edges of the plates 10, where the connected pairs of plates 10 are connected and/or welded and/or brazed, the undesired bypass for the second fluid flow is formed, which reduces the overall efficiency of the heat exchanger 100.

[0034] Figure 4a shows part of the present invention's solution for overcoming this problem of reduced heat exchanger efficiency. A channel blocking plate 30 in a partially manufactured state is shown. The channel blocking plate 30 is provided in the area of the bypass cavity 15 shown in figure 3b, effectively stopping bypass currents of the second flow. The channel blocking plate 30 is provided between at least some of the plates 10 and the shell 20. In a preferred embodiment, the channel blocking plate 30 may be provided between all of the plates 10 and the shell 20.

[0035] The channel blocking plate 30 comprises a plurality of protrusions 31, extending in a direction radially inwards of the shell 20. Although the channel blocking plate 30 of figure 4a shows only twelve such protrusions, the channel blocking plate 30 may comprise any required number of protrusions for a given heat exchanger 100 size and geometry.

[0036] As can be seen in figures 4a and 4b, the protrusions 31 may be formed by bent cuts in a sheet metal. Alternative or additional manufacturing methods may also be employed for generating the channel blocking plate 30. The bent areas portions of the protrusions 31 may be designed to point in the direction or in the opposite direction of the second fluid flow. The protrusions 31 may be cut and bent such that some of the protrusions 31 are bent one way, and the other protrusions 31 are bent in the opposite way.

[0037] The protrusions 31 may be arranged shifted to each other and/or may be arranged in parallel lines on the channel blocking plate 30 as shown in figures 4a to 4c. In particular, bent portions of at least some of the protrusions 31 may be collinear.

[0038] Figure 4b shows the protrusions extending over almost the entire width of the channel blocking plate 30. The example of Figure 4b shows rows of seven protrusions 31 extending across the width of the channel blocking plate 30. Two neighbouring rows of protrusions 31 are off-set in the directions of the width of the plate 30 by about half the distance between two neighbouring protrusions 31.

[0039] The shapes of the protrusions 31 may be designed to match the shapes of the spaces between two adjacent plates 10. The protrusions 31 may comprise a rectangular portion 311 and a tapered portion 312. In a state shown in figure 4c, in which the channel blocking plate 30 is installed in the heat exchanger 100, the tapered portion 312 is positioned radially more inwards of the rectangular portion 311. The protrusion 31 reaches into the bypass cavity 15 between two plates 10 and aligns with the plates 10 to at least partially seal of the bypass cavity 15.

[0040] The tapered portion 312 may comprise triangular, arched and/or circular sub-portions, such that the whole protrusions align as closely as possible to the plates 10 adjacent to it.

[0041] Figure 4c shows a semi-assembled heat exchanger 100, wherein a multitude of heat transfer plates 10 are aligned along a vertical axis and a part of said plates 10 is partially covered by two channel blocking plates 30 positioned radially outward of the heat transfer plates 10. According to figure 4c, the channel blocking plates 30 and their protrusions 31 are formed such that the protrusions 31 reach between two adjacent plates 10 and into the bypass cavity 15 defined by said two adjacent plates 10. The channel blocking plate 30 is designed to increase the portion of the second flow passing heat exchange regions of the heat exchanger 100 which exhibit the highest temperature gradient.

[0042] The embodiment of figure 4c shows two channel blocking plates 30 which are spaced apart from each other in an axial direction of the shell 20, and which are separated or surrounded by radially extending support structures 40 and axially extending support structures 41. Additional channel blocking plates 30 may be provided, such that all or almost all of the heat transfer plates 10 of the heat exchanger 100 may be in contact with at least one channel blocking plate 30. For example, a third channel blocking plate 30 could be added above the two channel blocking plates 30 during further assembly of the heat exchanger 100.

[0043] As is also shown in figure 4c, the channel blocking plate 30 may extend over only a fraction of the circumference of the heat exchanger 100, thereby blocking the bypass cavities 15 only in a limited, defined area. This allows for a flow of the second fluid through the bypass cavities 15 and through adjacent pairs of connected heat transfer plates 10 in other areas of the heat exchanger 100.

[0044] The channel blocking plates 30 may stretch over 60° $\pm$30° or $\pm$15° in a circumferential direction of the shell 20. The areas beyond those covered by the channel blocking plates 30 can be left free for the second fluid flow to pass between the second inlet and outlet openings 24, 24' shown in figures 1a and 1b and between the pairs of connected heat transfer plates 10.

[0045] The channel blocking plate 30 may extend along the entire inner length of the shell 20 in an axial direction of the shell 20. This corresponds to the channel blocking plate 30 of figure 4c extending along the entire vertical or height direction of the interior of the shell 20. The channel blocking plate 30 may be made of a plurality of separated and preferably identical sub-plates. In the case of the embodiment shown in figure 4c, three separate sub-plates, positioned next to each other in an axial direction of the shell 20 may form the channel blocking plate 30. Depending on the size and other geometrical

features of the heat exchanger 100, different numbers of channel blocking plates 30 may also be provided.

[0046] The channel blocking plates 30 visible in figure 4c are all positioned on one side of the heat exchanger 100. In order to block unwanted bypass currents in a circumferential direction of the heat exchanger 100, at least one channel blocking plate 30 may be provided on a side of the heat exchanger 100 facing away from the channel blocking plates 30 visible in figure 4c. If the second fluid flow path 22 shown in figure 3b flows in a generally horizontal direction in figure 4c, then the at least two channel blocking plates 30 can force the second fluid to flow past the inside and between the connected pairs of heat transfer plates 10 rather than close to the outer circumference of the inside of the shell 20. The channel blocking plates 30 thus reduce or eliminate unwanted bypass currents around the areas of greatest heat exchange positioned radially inward of the shell 20.

[0047] Figure 5a shows a sectional view of the channel blocking plate 30 positioned between heat transfer plates 10 and the radially outward positioned shell 20. The protrusions 31 are shown to block every other bypass cavity 15 at the circumferential position shown in figure 5a. It is understood that the bypass cavities 15 not blocked off in figure 5a are blocked off by other, not shown protrusions 31 at a different circumferential position of the channel blocking plate 30. The protrusions 31 may be of a non-uniform cross-section and may be formed to fit snugly to the annular connection portions 14 of the connected pairs of heat transfer plates 10.

[0048] The protrusions shown in figure 5a are all directed radially inwards of the heat exchanger 100. In a different embodiment, which is not shown in the figures, at least some of the protrusions 31 may be directed radially outwards of the heat exchanger 100 such that they press against the inside of the shell 20 and hence provide a force pushing the channel blocking plate 30 radially inwards and into position against the heat transfer plates 10. The protrusions 31 which are directed radially outwards may be not parallel to the protrusions 31 directed radially inwards but rather only slightly bent from the circumferential direction in which the entire channel blocking plate 30 is aligned.

[0049] Figure 5b is a sectional view of parts of the heat exchanger 100, showing the positioning of the channel blocking plates 30 within the heat exchanger 100. In this embodiment, two channel blocking plates 30 are positioned on opposite sides of the heat exchanger. In particular, the two channel blocking plates 30 may be offset to each other by 180° in the circumferential direction of the heat exchanger 100. The channel blocking plates 30 may be at a position, which is offset by about 90° from the position of the plate openings 13 and/or the second inlet and outlet openings 24, 24' shown in figures 1a, 1b and 3b.

[0050] The heat exchanger 100 may comprise one or more sealing plates 50 which may be positioned radially outwards of the channel blocking plate 30 for reducing or eliminating undesired fluid flow through or past the channel blocking plate 30. The sealing plates 50 may be compressed between the inside of the shell 20 (not shown in figure 5b) and the outside of the channel blocking plates 30. The sealing plate 50 seals openings in the channel blocking plate 30 resulting from the cut and bent protrusions 31, as visible in figure 4b. The sealing plate 50 may be held tight against the channel blocking plate 30 by means of a spring mechanism, such as a metallic spring portion and/or a synthetic elastic material.

[0051] The sealing plate 50 may comprise a radially inwards sealing portion which fits snugly onto the radially outward side of the channel blocking plate 30. One or more separation portions may be connected to the sealing portion, said separation portions extending in a radial direction and away from the sealing portion. One or more spring portions may be connected to the separation portions. The spring portion of the sealing plate may be the spring mechanism for pressing the sealing plate 50 against the channel blocking plate.

[0052] The spring portions may be positioned at an angle with respect to the separation portion and may be designed to be deformed upon insertion into the shell 20. The deformation of the spring portion results in a force pushing the sealing plate 50 on the channel blocking plate 30, thereby sealing at least some of the leakage occurring past the channel blocking plate 30.

[0053] The sealing plate 50 may be smaller than the channel blocking plate 30. In particular, the sealing plate 50 may be dimensioned such that the channel blocking plate 30 may be two, three or more times wider in a circumferential direction than a single sealing plate 50. Smaller sealing plates 50 and a corresponding higher number of sealing plates and spring mechanisms make it possible to exert a more uniform cross on the channel blocking plate 30, thereby improving the sealing function of the sealing plate 50.

[0054] The invention is not limited to the above-mentioned embodiments but may be varied in manifold ways. In particular, features of the above-mentioned embodiments may be combined in any logically possible manner. All features and advantages including construction details and spatial configurations, which are disclosed in the claims, in the description and in the figures, may be essential to the invention, both, individually and in combination with each other.

Claims

1. A plate-and-shell heat exchanger (100) comprising a shell (20) and a plurality of heat transfer plates (10) within the shell (20), said plates (10) forming fluidly connected first cavities (11) for providing a first fluid flow path (12) for a first fluid flow and the shell (20) forming a second cavity (21) in which the plates (10) are arranged and providing a second fluid flow path (22) for a second fluid flow separated from the first

fluid flow path (12) by the plates (10), **wherein** at least one channel blocking plate (30) is provided between at least some of the plates (10) and the shell (20), said channel blocking plate (30) comprising a plurality of protrusions (31) extending in a direction radially inwards of the shell (20) and reaching between two adjacent plates (10).

2. A plate-and-shell heat exchanger (100) according to claim 1, wherein the channel blocking plate (30) extends over 60° ±30°, in particular ±15°, in a circumferential direction of the shell (20) and/or the channel blocking plate (30) extends along the entire inner length of the shell (20) in an axial direction of the shell (20) and/or the channel blocking plate (30) comprises a plurality of separated and preferably identical sub-plates.

3. A plate-and-shell heat exchanger (100) according to claim 1 or 2, wherein at least two channel blocking plates (30) are provided which are positioned opposite each other with respect to a central axis of the shell (20).

4. A plate-and-shell heat exchanger (100) according to any of the previous claims, wherein the protrusions (31) are formed by bent cuts.

5. A plate-and-shell heat exchanger (100) according to any of the preceding claims, wherein a sealing plate (50) is positioned radially outwards of the channel blocking plate (30) for sealing openings in the channel blocking plate (30), wherein the sealing plate (50) is preferably held tight against the channel blocking plate (30) by means of a spring mechanism.

6. A plate-and-shell heat exchanger (100) according to any of the preceding claims, wherein the protrusions (31) on the at least one channel blocking plate (30) are arranged shifted to each other and/or are arranged in parallel lines and/or that the shapes of the protrusions (31) match the shapes of the spaces between two adjacent plates (10).

7. A plate-and-shell heat exchanger (100) according to any of the preceding claims, wherein at least two channel blocking plates (30) are provided which are spaced apart from each other in an axial direction of the shell (20), and which preferably are at least partially separated and/or surrounded by radially extending support structures (40) and/or axially extending support structures (41).

8. A plate-and-shell heat exchanger (100) according to any of the preceding claims, wherein the protrusions (31) comprise a rectangular portion (311) and a tapered portion (312), wherein the tapered portion (312) is positioned radially more inwards of the rectangular portion (311).

9. A plate-and-shell heat exchanger according to claim 8, **characterized in that** the tapered portion (312) is a triangular, arched or circular portion.

10. Channel blocking plate (30) for a plate-and-shell heat exchanger (100) according to any of claims 1 to 9.

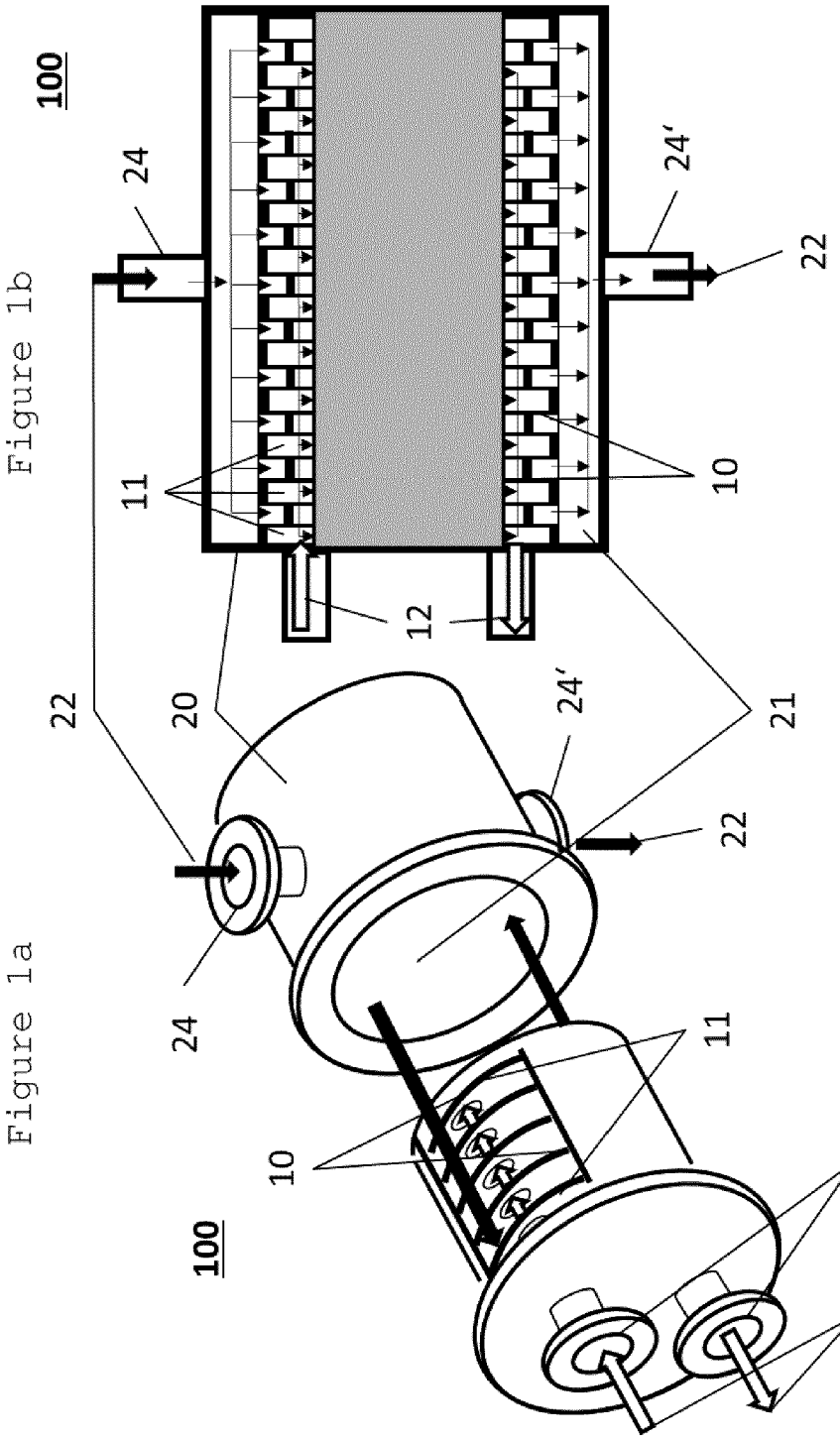
100
24
24'
22
11
10
12
Figure 1b
22
20
24'
21
22
24
11
10
100
23, 23'
12
Figure 1a

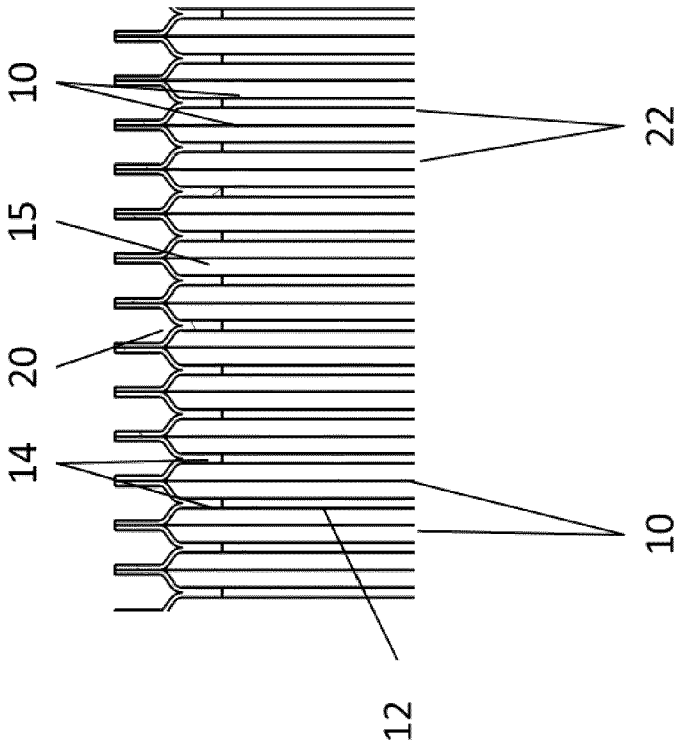

Figure 2b

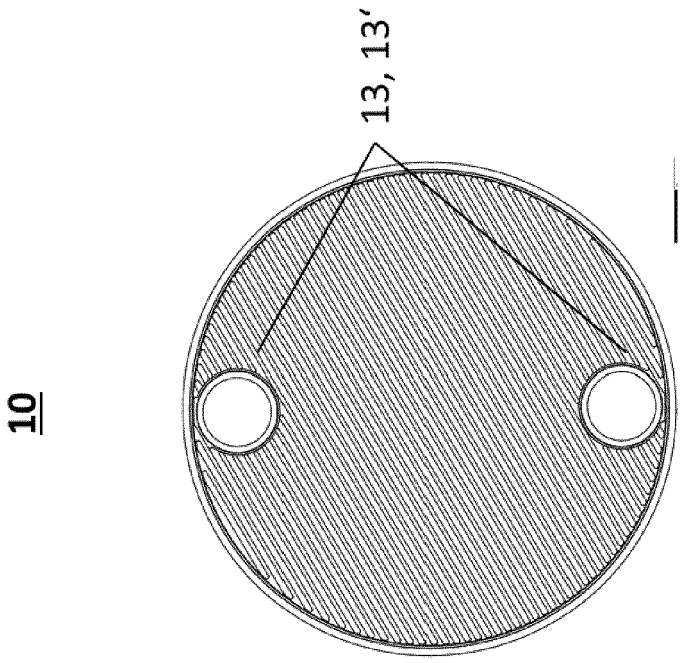

Figure 2a

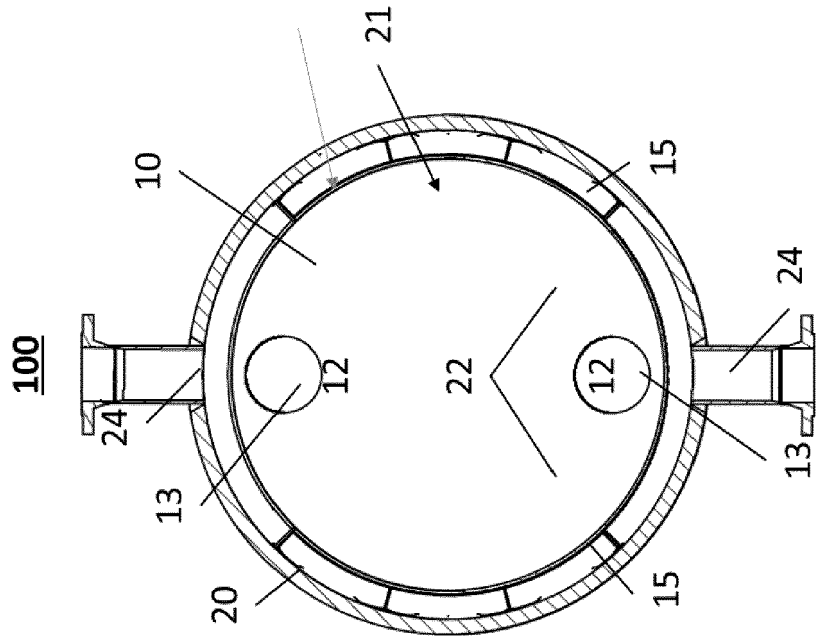

Figure 3b

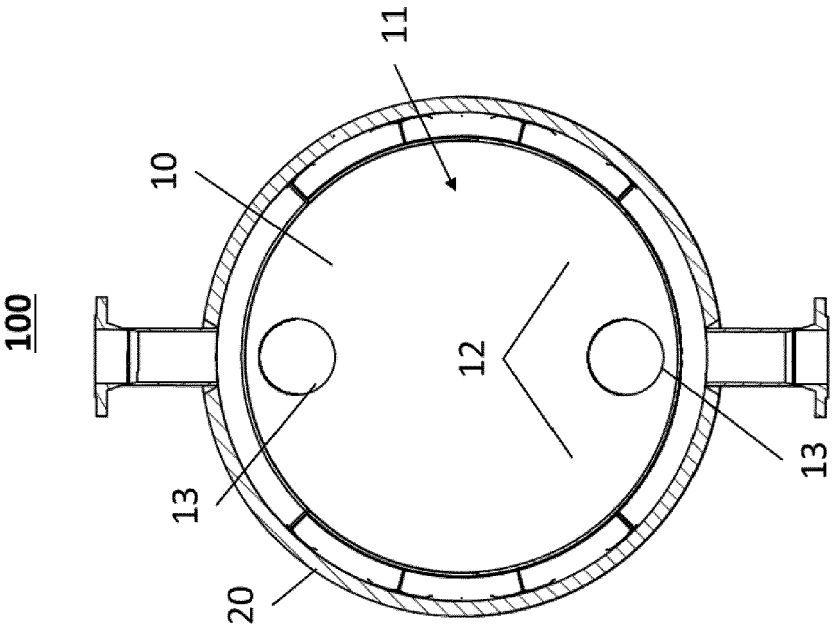

Figure 3a

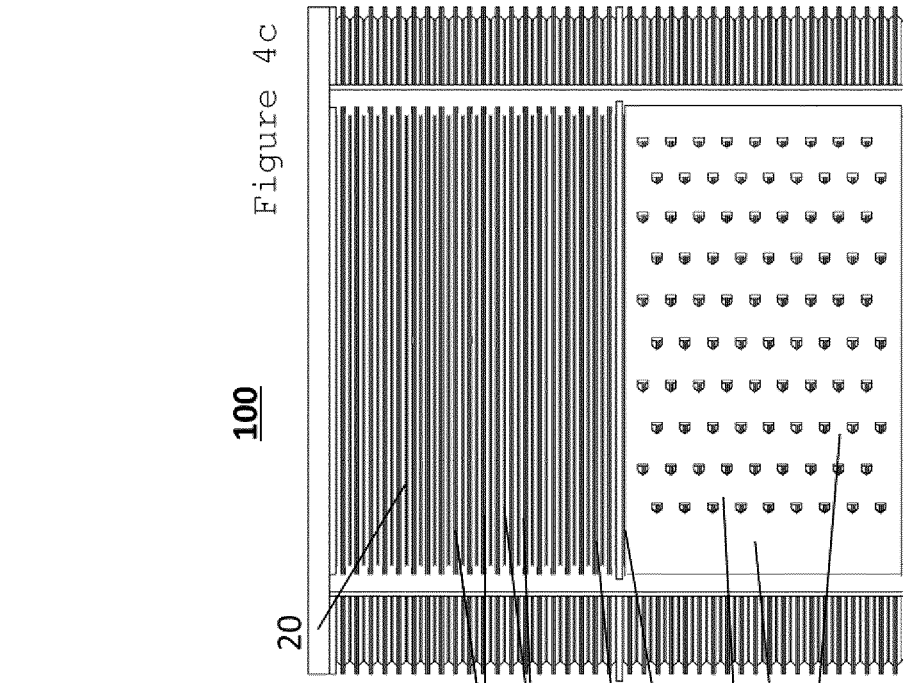

Figure 4c

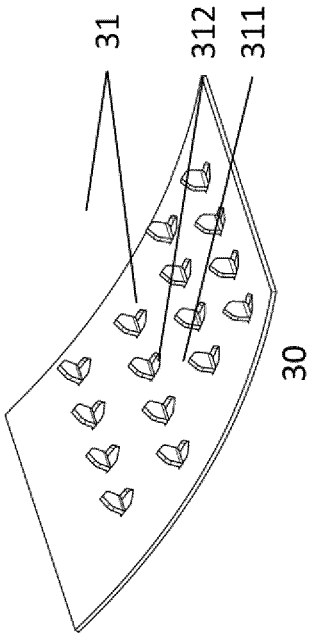

Figure 4a

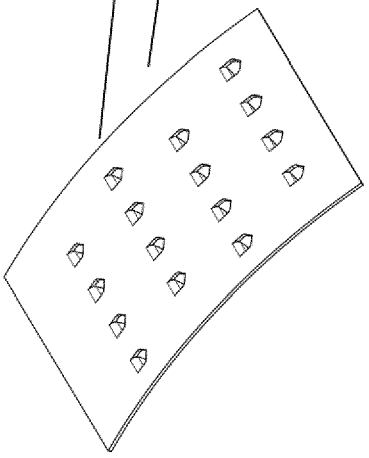

Figure 4b

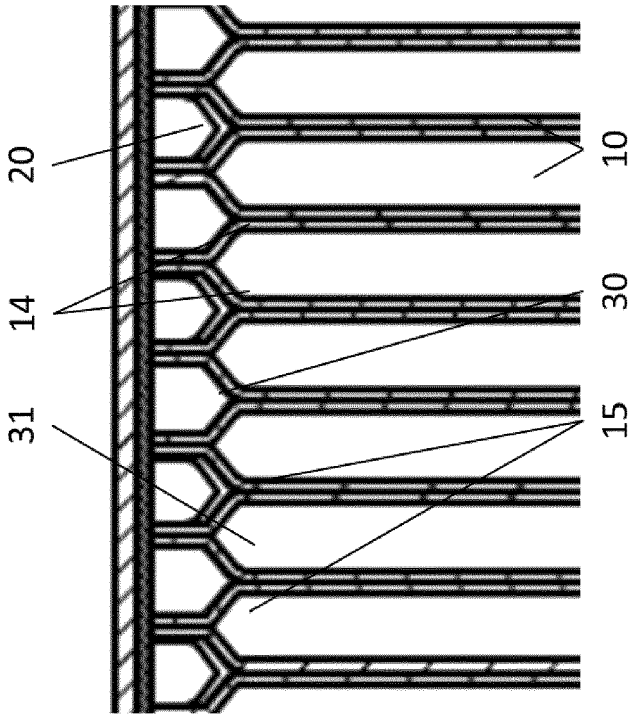

Figure 5a

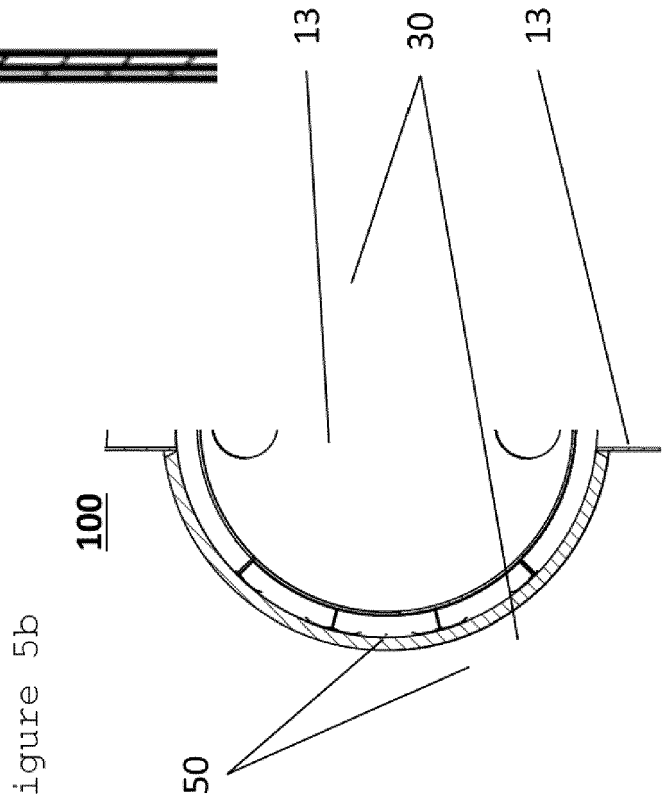

Figure 5b

Europäisches Patentamt
European Patent Office
Office européen des brevets

EUROPEAN SEARCH REPORT

Application Number
EP 20 20 4550

DOCUMENTS CONSIDERED TO BE RELEVANT

Category	Citation of document with indication, where appropriate, of relevant passages	Relevant to claim	CLASSIFICATION OF THE APPLICATION (IPC)
A	EP 3 489 607 A1 (DANFOSS AS [DK]) 29 May 2019 (2019-05-29) * paragraph [0028]; figure 1 *	1-10	INV. F28D9/00 F28F9/00
A	US 2008/179049 A1 (MATHUR ACHINT P [US] ET AL) 31 July 2008 (2008-07-31) * figure 1 *	1-10	
A	WO 2015/070201 A1 (TRANTER INC [US]) 14 May 2015 (2015-05-14) * figure 8 *	1-10	
A	WO 2017/093603 A1 (VAHTERUS OY [FI]) 8 June 2017 (2017-06-08) * figure 1 *	1-10	

TECHNICAL FIELDS SEARCHED (IPC)

F28D
F28F

The present search report has been drawn up for all claims

Place of search	Date of completion of the search	Examiner
Munich	18 January 2021	Bain, David

CATEGORY OF CITED DOCUMENTS

X : particularly relevant if taken alone
Y : particularly relevant if combined with another document of the same category
A : technological background
O : non-written disclosure
P : intermediate document

T : theory or principle underlying the invention
E : earlier patent document, but published on, or after the filing date
D : document cited in the application
L : document cited for other reasons

& : member of the same patent family, corresponding document

EPO FORM 1503 03.82 (P04C01)

ANNEX TO THE EUROPEAN SEARCH REPORT ON EUROPEAN PATENT APPLICATION NO. EP 20 20 4550

This annex lists the patent family members relating to the patent documents cited in the above-mentioned European search report. The members are as contained in the European Patent Office EDP file on
The European Patent Office is in no way liable for these particulars which are merely given for the purpose of information.

18-01-2021

Patent document cited in search report	Publication date	Patent family member(s)	Publication date
EP 3489607 A1	29-05-2019	CN 109813161 A	28-05-2019
		DK 179767 B1	14-05-2019
		EP 3489607 A1	29-05-2019
		US 2019154349 A1	23-05-2019
US 2008179049 A1	31-07-2008	NONE	
WO 2015070201 A1	14-05-2015	EP 3087336 A1	02-11-2016
		US 2015129181 A1	14-05-2015
		WO 2015070201 A1	14-05-2015
WO 2017093603 A1	08-06-2017	NONE	

EPO FORM P0459

For more details about this annex : see Official Journal of the European Patent Office, No. 12/82