Sept. 8, 1953 L. NEEL 2,651,105

MANUFACTURE OF PERMANENT MAGNETS

Filed July 10, 1947 3 Sheets-Sheet 1

Fig. 1

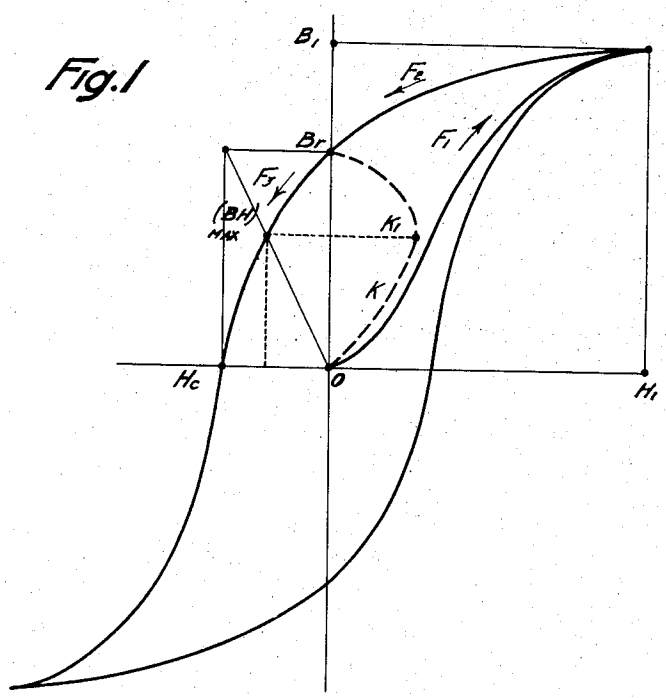

Fig. 2

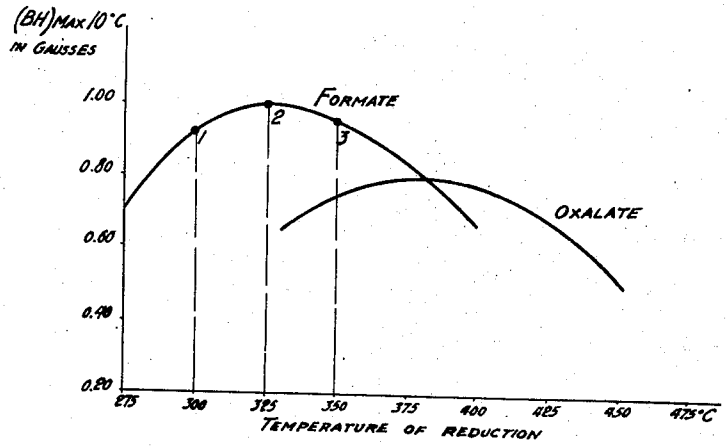

INVENTOR
LOUIS NEEL
by
Stebbins, Blenko & Webb
Attys.

MANUFACTURE OF PERMANENT MAGNETS

Filed July 10, 1947 3 Sheets-Sheet 2

Fig. 3

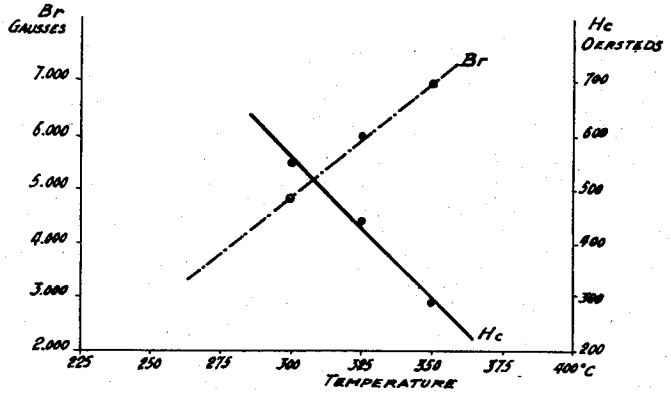

Fig. 4

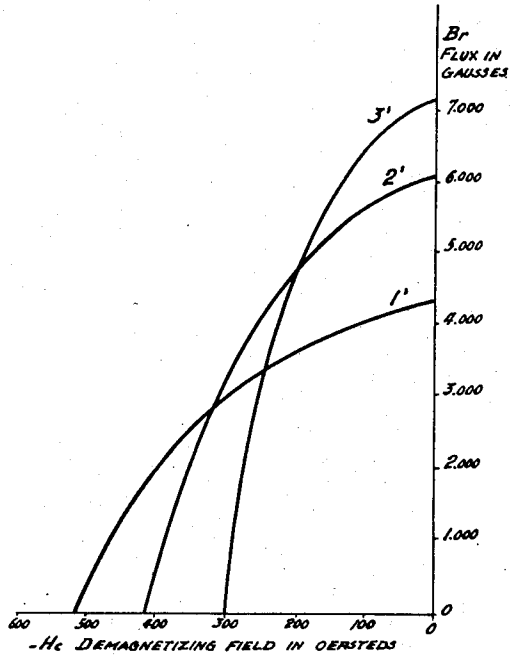

INVENTOR
LOUIS NEEL
by
Stibbins, Blenko & Webb
Attys.

Sept. 8, 1953 L. NEEL 2,651,105

MANUFACTURE OF PERMANENT MAGNETS

Filed July 10, 1947 3 Sheets-Sheet 3

Fig. 5

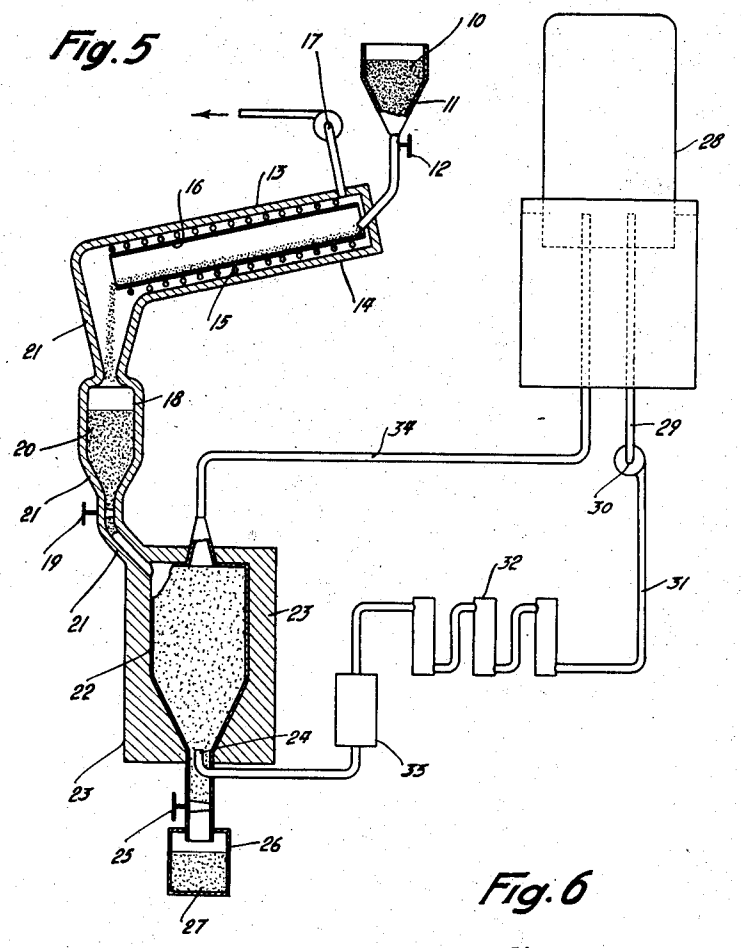

Fig. 6

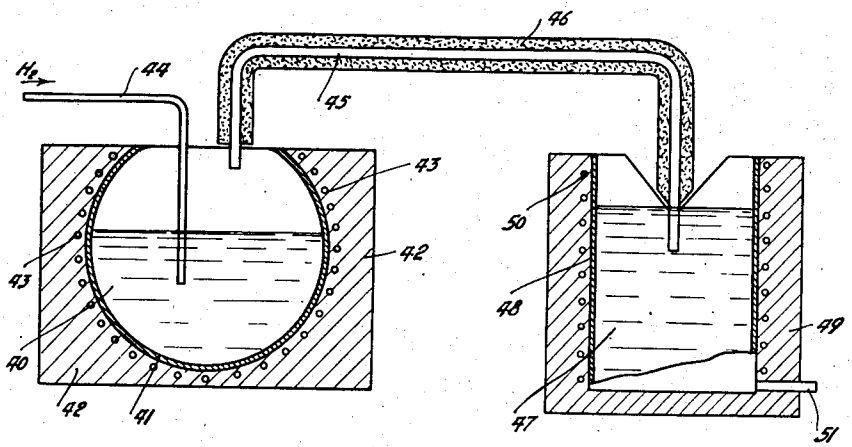

INVENTOR
LOUIS NEEL

by
Stebbins, Blenko & Welt
Attys.

Patented Sept. 8, 1953

2,651,105

UNITED STATES PATENT OFFICE

2,651,105

MANUFACTURE OF PERMANENT MAGNETS

Louis Néel, Grenoble, France, assignor to Société d'Electro-Chimie, d'Electro-Metallurgie et des Acieries Electriques d'Ugine, Paris, France, a corporation of France

Application July 10, 1947, Serial No. 760,091
In France April 7, 1942

6 Claims. (Cl. 29—155.6)

1

The present invention relates to permanent magnets and their manufacture.

This application is a continuation-in-part of my copending application Serial No. 585,399, filed March 28, 1945, now abandoned.

I have discovered that permanent magnets having high coefficients of quality (high coercive force combined with high remanence) may be made by the low temperature decomposition and reduction of certain carbon and oxygen containing compounds of ferromagnetic metal to produce a ferromagnetic metal powder containing a small amount of carbon and traces of oxygen, and shaping magnets from such powder by compacting it at a temperature below that at which objectionable crystal growth would occur. The compounds which I have found suitable are compounds of ferromagnetic metal containing carbon and oxygen which are decomposable and reducible at relatively low temperatures (below 500° C. and preferably between about 300° and 400° C.) to produce a ferromagnetic metal powder which when compacted into magnet form produces permanent magnets of high quality. The preferred compounds are formates, oxalates, carbonates and carbonyls of iron and other ferromagnetic metals and alloys. These compounds when decomposed are reduced at relatively low temperatures yield metallic powders in which the elementary grains or crystals are of colloidal dimensions of the order of .01 to 0.1 micron. Since such compounds contain both carbon and oxygen, carbon and oxygen are present during decomposition and reduction. Reduction is carried out so that the reduced metal powder contains a small but substantial amount of carbon (usually of the order of 0.2 to 2.5%); together with traces of oxygen (usually of the order of 1%). I believe that the carbon and the oxygen are present largely at the surfaces of the elementary grains or crystals and inhibit their growth not only during reduction but also during the compacting operation which is required for shaping the powder into magnets which are structurally strong and coherent. I believe that the inhibiting effect of the carbon and perhaps of the oxygen is largely responsible for the high coefficients of quality of my permanent magnets.

In the accompanying drawings:

Fig. 1 is a diagram showing the hysteresis loop of a permanently magnetic material upon which I have indicated how the so-called coefficient of quality of such material is determined;

Fig. 2 consists of curves showing the relation between the temperature of reduction of iron formate and iron oxalate and the coefficients of quality of magnets compacted from such products of reduction;

Fig. 3 is a diagram showing the variations of the coercive force and the remanence with the temperature of reduction of a magnet compacted

2

from the powder reduction product of iron formate;

Fig. 4 is the upper left quadrant of a hysteresis loop diagram for magnets compacted from powders corresponding to points 1, 2 and 3 of Fig. 2;

Fig. 5 is a side elevation partly in section of an apparatus for decomposing and reducing certain of my carbon and oxygen containing compounds;

Fig. 6 is a diagram of an apparatus for decomposing carbonyl compounds.

The quality of a permanent magnet is characterized by its coercive force and its remanence, both factors having the highest possible figure in a good permanent magnet.

In Fig. 1 is shown the usual hysteresis loop of a permanent magnet. The abscissae denote applied electromagnetic force and the ordinates the resulant electromagnetic flux through the magnet. When a permanent magnet is initially magnetized the field indicated by the abscissae to the right of zero is applied until the applied field equals a value indicated at H_1 expressed in oersteds. As the field is applied, the flux increases as indicated by the curve F_1 until it attains a value B_1, expressed in gausses. If the field is then reduced, the flux decreases as indicated by the portion F_2 of the hysteresis loop until the field H is reduced to zero, at which point the flux B falls to a value indicated by B_r, which denotes the permanent flux or remanence of the magnet. If an electromagnetic force in the opposite direction is applied as indicated by the abscissae to the left of zero, the flux decreases as shown by the portion F_3 of the hysteresis loop until the flux reaches a zero value. The value of the demagnetizing field required to reduce the flux to zero is indicated as H_c and is termed the coercive force of the magnet.

The coefficient of quality of a permanent magnet is given by the value of the product of the flux and the applied demagnetizing field at that point of the portion F_3 of the hysteresis loop at which this product is a maximum, and which is known as "BH maximum," denoted in Fig. 1 as "(BH) max."

The curve K indicates as its abscissae the values of the products of B and H for different values of H and has a maximum value K_1 which corresponds to the point (BH) max.

For general purposes it is usually preferred to have the coefficient of quality or BH maximum as large as possible. However, for certain purposes it may be desirable to somewhat increase the coercive force at the expense of the remanence, or vice versa. I have found that this may be done by varying the temperature of reduction of the selected ferormagnetic metal compounds, and also by varying the compacting pressure.

In Fig. 3 I have indicated by the intersecting lines H_c and B_r the coercive forces and reman-

ences, respectively, for varying temperatures of reduction of a series of similarly shaped magnets made by the cold compression at 5 metric tons per square centimeter of an iron powder formed by the decomposition and reduction of iron formate. It will be noted that as the temperature of reduction is decreased within the limits shown in Fig. 3, the coercive force is increased, and that as the temperature of reduction is increased, the remanence is increased.

In Fig. 2 I have shown by the points 1, 2 and 3 the respective coefficients of quality of three similarly shaped magnets made by compacting an iron powder formed by the decomposition and reduction of iron formate for reduction temperatures of 300°, 325° and 350° C.

In Fig. 4 I have shown by the reference numerals 1', 2' and 3' the curves of demagnetization of said magnets respectively. The three curves 1', 2' and 3' correspond to the portion of the hysteresis loop in the upper left quadrant, as indicated by reference letter F_3, in Fig. 1.

As as can be seen by an inspection of Figs. 2 and 4, the magnet made from the iron formate reduced at 325° C. has the greatest coefficient of quality (1×10^6), a coercive force of 415 oersteds and a remanence of 6100 gausses. The magnet made from the iron formate reduced at 300° C. has a lower coefficient of quality (0.92×10^6), a higher coercive force (520 oersteds) and a lower remanence (4300 gausses), while the magnet made from the iron formate reduced at 350° C. has a lower coefficient of quality (0.95×10^6), a lower coercive force (300 oersteds) and a higher remanence (7200 gausses).

I will next describe a preferred embodiment of my invention, together with the preferred apparatus for carrying out my process, as illustrated in Fig. 5.

The starting material is iron formate, preferably in granular form, indicated by reference numeral **10**, which is supplied to the feed hopper **11**. It is fed through a regulating valve **12** to a decomposer indicated generally by reference numeral **13**. The decomposer has a closed stationary outer shell **14** lined with electrical heaters **15**. Within the shell **14** is a rotating thin-walled metal tube **16** through which the iron formate is fed. The iron formate is heated to a temperature of preferably about 300 to 325° C. At this temperature the iron formate decomposes. Gaseous carbon dioxide and carbon monoxide are driven off and a powder is produced which consists of a mixture of iron oxides and a substantial amount, generally about 20%, of pure iron, together with a small but substantial amount, generally about 1%, of carbon. This powder is produced in a highly unstable condition, and is so pyrophoric that it must be protected against oxygen.

The carbon dioxide and carbon monoxide gases are drawn off by an exhaust fan **17**. The powder falls into the feed hopper **18**, from which it is fed through the regulating valve **19** to the reducer indicated generally by reference numeral **20**.

The decomposing retort **13**, the feed hopper **18** and connecting piping are enclosed by insulating jackets **21** so that the powder is delivered to the reducer in heated condition.

The reducer **20** consists of a metal hopper-like retort **22** surrounded by an insulating jacket **23**. The retort is supplied with a continuous circulation of dry purified hydrogen through an intake **24** at the bottom of the retort. The stream of hydrogen is supplied under sufficient pressure and in sufficient amount to lift and agitate the powder in the retort to insure thorough and intimate contact therewith by the hydrogen gas. The hydrogen is supplied in heated condition so as to maintain the powder in the retort at a temperature of about 325° C. An excess of hydrogen is used not only to reduce the powder but also to carry away the products of reduction, such as water vapor, as well as the gaseous oxides of carbon which may have been entrained from the decomposing reaction.

The resultant powder which is drawn off from time to time through the valve **25** into the closed container **26** consists substantially of pure iron, together with about 1% of carbon partially combined with the iron, and traces of oxygen, probably as unreduced iron oxide. The powder is pyrophoric and must be protected from the air by known methods, such as mixing with dehydrated acetone or gasoline. For this purpose a bath **27** of dehydrated acetone or gasoline is maintained in the container **26** into which the powder is discharged.

The heated dry purified hydrogen may be supplied to the reducer **20** by any suitable and conventional apparatus. In the drawings I have shown such apparatus. Hydrogen is supplied by a suitable hydrogen generator (not shown) to a storage tank **28** illustrated as of the conventional gasometer type. Hydrogen is withdrawn from the tank through the outlet pipe **29** and a compressor **30**, from which it flows through pipe **31** to a purifier **32** which consists of silica gel and phosphorous pentoxide. The dried purified hydrogen next passes through a heater **33** in which its temperature is raised to a temperature usually about 400° C., sufficient to maintain the powder in the reducer at about 325° C. The heated hydrogen is then injected through the nozzle **24** into the bottom of the reducer retort **22**. The hydrogen is supplied from the nozzle **24** under sufficient pressure, usually about 200 gr. per square centimeter, so as to cause a thorough intermixing of the hydrogen and the iron powder. The hydrogen is discharged from the top of the retort **22** through a pipe **34** and returned to the storage tank **28** for re-use.

The iron powder which is collected in the container **26** is next shaped into magnet form by compacting at room temperature under a pressure of preferably of the order of 5 or 6 metric tons per square centimeter, resulting in a density of about 4.5 grams per cubic centimeter. The dehydrated acetone or gasoline accompanying the powder is expelled in the course of the compacting operation.

The powder may be compacted with or without binders such as Bakelite, tars and oils. Such binders serve to seal the magnets against the access of oxygen since they coat the iron particles and seal the pores of the compacted powder. Where the magnets are compacted without a binder, the shaped magnet should be impregnated, at least the surface, with some material which will close the pores and seal the magnet against the access of oxygen. Such sealing materials may be pitches, resins, greases, plastics or the like.

The magnet is preferably magnetized after compacting the powder into magnet shape, although magnetization may be applied during the compacting operation.

A permanent magnet as made by the procedure specifically described has a density of about 4.5, a coercive force of about 425 oersteds, and a

remanence of about 6000 gausses, and a coefficient of quality of about 1,000,000.

The temperature of reduction of 325° C. of the iron formate and the compacting of the reduced iron powder to a density of about 4.5 produces a balance of coercive force and remanence which results in about the maximum coefficient of quality. There are certain variables which may be controlled to vary the coercive force and the remanence. In general, if these variables are controlled to give a higher coercive force it is done at the expense of a reduction in the remanence, and vice versa.

For example, an increase in the compacting pressure results in a higher remanence with a reduction of the coercive force, and vice versa. While a compacting pressure of about 5 metric tons per square centimeter and a density of about 4.5 produces about the maximum coefficient of quality, the density may vary from 4.2 to 4.8 and the compacting pressure from about 5 to 8 metric tons per square centimeter. The compacting pressure required to attain a certain density will vary somewhat depending upon the size and shape of the magnet.

Another example of the control of the coercive force and remanence alluded to above is by control of the temperature of reduction of the iron powder, as illustrated in Figs. 2, 3 and 4. The temperature of reduction recited in the specific example is 325° C. The best range of temperature of reduction of iron formate is from about 300° to 350° C., between which limits excellent coefficients of quality are attained. This range may be extended from about 250° to 400° C., within which range magnets having good to fair coefficients of quality are obtained.

The temperature of reduction as distinguished from the temperature of decomposition appears to be the governing factor in the control of coercive force and remanence. However, the temperature of decomposition should not be much above that of reduction and for efficient decomposition should not be much below that of reduction. The temperature of decomposition is preferably approximately equal to that of reduction.

While I prefer to carry out decomposition and reduction as separate steps, since this is more economical of hydrogen, decomposition and reduction may be carried out in one operation. In such operation preliminary decomposition is omitted and the iron formate or other compound to be decomposed and reduced is subjected to the action of a counter current stream of hydrogen in an externally heated tubular retort of the type shown at **16** in Fig. 5, in which decomposition and reduction proceed simultaneously. Much more hydrogen is required since the hydrogen must sweep away not only the gaseous products of reduction but also the gaseous products of decomposition.

While I prefer to use dry purified hydrogen as the reducing gas, other reducing gases may be employed, such as carbon monoxide, or cracked ammonia. Such gases should be freed from water vapor and gaseous oxides.

While I prefer to employ formates because of the low temperatures required for their decomposition and reduction, other carbon and oxygen containing compounds of ferromagnetic metal may be employed, which require a relatively low temperature for decomposition and reduction, below 500° C and preferably below 400° or 450° C. Among such compounds are

the oxalates, carbonates and carbonyls. The oxalates and carbonates may be decomposed and reduced in the same manner as the formates, preferably with the type of apparatus illustrated in Fig. 5. Iron oxalate requires a somewhat higher temperature for reduction than iron formate. As shown by the curve marked "Oxalate" in Fig. 2, reduction of iron oxalate at about 380° C. produces compacted magnets of the maximum coefficient of quality. As in the case of the formate, a lowering in the temperature of reduction results in an increase in the coercive force and a decrease in the remanence, and an increase in the temperature of reduction results in a decrease of the coercive force and an increase in the remanence. In each case the coefficient of quality is somewhat reduced. The preferred range of temperature of reduction of iron oxalate is between 350 and 375° C., but this range may be extended from about 300 to 450° C. and good to fair coefficients of quality attained.

Another compound which may be similarly employed is the carbonate of ferromagnetic metal. The optimum temperature of reduction is about 380° C. The preferred range of temperature is between 375 and 400° C. Such range may be extended from about 350° to 450° C. and good to fair coefficients of quality attained.

Other compounds which may be employed are the carbonyls of ferromagnetic metals. The carbonyls are preferably simultaneously decomposed and reduced in an oil bath heated to a temperature of about 275° C.

I have shown at Fig. 6 a preferred embodiment of an apparatus for the decomposition of such carbonyls.

I have shown at Fig. 6 a diagram of an apparatus which may be used for such a decomposition and reduction. A bath of liquid iron carbonyl, indicated by the reference numeral **40**, heated to a temperature of about 110° C. in a container **41** surrounded by heating means comprising an insulating casing **42** provided with electric heaters **43**, while a current of dried and purified hydrogen is introduced in said bath by means of a tube **44**. The iron carbonyl is thus caused to evaporate and the hydrogen containing the carbonyl vapor is driven off through a tube **45** enclosed by an asbestos insulating jacket **46** and then passed into a bath of mineral oil **47** contained in a tank **48** surrounded by heating means comprising a refractory casing **49** provided with electric heaters **50** and maintained at a temperature of about 275° C. where decomposition and reduction of the carbonyl take place to yield metallic iron containing, as in the case of the reduced formates, oxalates and carbonates, a small but substantial proportion of carbon, usually about 1/1%, together with traces of oxygen. The mixture of mineral oil and iron powder is evacuated through a pipe **51**, whereafter the mineral oil is washed from the iron powder by a suitable solvent such as dehydrated acetone or gasoline and the powder compressed into magnet form. Other inert liquids which can be heated to the required temperature may be employed in place of the mineral oil. The optimum temperature of reduction is about 300° C. The preferred range is from about 250 to about 350° C., which range may be extended from about 200 to about 500° C. and good to fair coefficients of quality attained.

The reduced powders may contain not only iron

but other ferromagnetic metals such as nickel and cobalt or their alloys. Other metals known as entering into the composition of ferromagnetic alloys may be added in powdered form, preferably in the proportions in which they have been used as alloying metals, such as chromium, manganese, aluminum, bismuth, titanium, molybdenum, tungsten, copper and the like. Such metal powders when used should have their elementary grains or crystals of exceedingly fine dimensions, of the order of magnitude of those of colloidal particles, for instance of the order of .01 to 0.1 micron.

When it is desired to use powders containing two or more metals it is preferable to decompose and reduce compounds containing such metals to obtain the said powder. For example, a solution may be prepared containing iron formate and cobalt formate and crystallized by cooling to produce syncrystals of both salts, which are decomposed and reduced to produce an iron-cobalt powder. When in the claims I use the expression "ferromagnetic metal" I mean to include not only the metals but mixtures thereof.

I have found that the lower the temperatures of reduction, the higher the coercive force of magnets made from the reduced powder. It is quite remarkable that particles of substantially pure iron have a coercive force comparable to that attained by the quenching of hard alloys usually employed for the manufacture of permanent magnets. I believe that this is due to the structure of the particles of iron or other ferromagnetic metal which I employ. I believe that the metal particles as reduced are probably porous, having a sponge-like structure with many holes in it, and that between these holes are very small elementary grains or crystals which constitute the sponge walls. Measurements of the enlargement of the X-ray diffraction lines indicates that the elementary grains or crystals have dimensions of the order of magnitude of colloidal particles of about .01 to 0.1 micron. I further believe that because of my process carbon and oxygen are present at the surfaces of such elementary grains or crystals and inhibit crystal growth and the colloidal dimensions of the elementary grains or crystals are largely retained in completed magnet, imparting to it its high coercive force.

Only those compounds of ferromagnetic metal with carbon and oxygen which are reducible at relatively low temperatures are suitable as starting materials in my process. Such compound should be reducible at temperatures below 500° C., preferably below 400° or 450° C. Because of the low temperature of decomposition and reduction of the formates, the preferred compounds in carrying out my process, the reduction is preferably carried out at about the lowest temperature consistent with speed of commercial production. The temperature of reduction should not exceed 500° C. and is preferably below 450° or even 400° C., but I believe that by thus maintaining a low temperature of reduction, small but effective amounts of carbon and oxygen are retained in the reduced powder and inhibit crystal growth.

The reduction is preferably carried to the point where but traces of oxygen or oxides are present in the reduced powder. However, the reduction may be incomplete and a minor but substantial amount, say a few per cent of the oxide or oxides of the ferromagnetic metal may be present along with the reduced metal.

The temperature of decomposition, when decomposition and reduction are carried out as separate steps, should be held to about the same limits as that of reduction.

The compacting is preferably carried out cold. It should not exceed the temperature of reduction because of the tendency to crystal growth at the higher temperatures.

Certain examples will now be given to illustrate various manners of carrying out the invention.

Example 1

A molding powder was obtained by the decomposition of iron formate at 320° with simultaneous reduction with hydrogen for one hour. The quantity of hydrogen used was .1 gram per minute per gram of formate. The reduced powder was bedded in acetone as soon as it was formed, then taken out and compacted in the cold. A magnet compacted to a density of 3 grams per cubic centimeter had a coercive force of 530 oersteds and a remanence of 3000 gausses. Another magnet compacted from the same powder to a density of 6.5 grams per cubic centimeter had a coercive force of 410 oersteds and a remanence of 5700 gausses.

Example 2

A molding powder was obtained by the decomposition and reduction of cobalt formate under conditions similar to those described for iron formate in Example 1. Magnets produced from this powder compacted to a density of 6 grams per cubic centimeter had a coercive force of 350 oersteds and a remanence of 5700 gausses.

Example 3

A solution containing iron formate and cobalt formate was made up proportioned to contain 27 parts of cobalt to 73 parts of iron. This was caused to crystallize by cooling to produce syncrystals containing both salts. Decomposition and simultaneous reduction was effected as in Example 1.

The conditions were varied as follows:

(*a*) The reduction temperature was 350° C. and the reduction lasted 45 minutes. The hydrogen used was about .02 gram per minute and per gram of salt being treated. Two magnets were made from the reduced iron-cobalt powder. The first had a density of 2 grams per cubic centimeter, a coercive force of 1400 oersteds and a remanence of 1225 gausses. The second had a density of 4 grams per cubic centimeter, a coercive force of 1240 oersteds and a remanence of 2500 gausses.

(*b*) The hydrogen delivery was increased to about .1 gram per minute per gram of salt. Two magnets were made. The first had a density of 2 grams per cubic centimeter, a coercive force of 1300 oersteds and a remanence of 1900 gausses. The second had a density of 4 grams per cubic centimeter, a coercive force of 920 oersteds and a remanence of 3600 gausses.

(*c*) The reduction temperature was increased to 380° C. and the duration of reduction reduced to 30 minutes. The hydrogen delivery was about .06 gram per minute per gram of salt. These magnets were compacted from the powder. The first had a density of 2 grams per cubic centimeter, a coercive force of 1200 oersteds and a remanence of 2900 gausses. The second had a density of 4, a coercive force of 690 and a remanence of 6200. The third had a density of 6, a coercive force of 560 and a remanence of 9400.

A comparison of the results of (*a*) and (*b*) shows that the increase of hydrogen delivery, other conditions remaining the same, caused an increase of remanence and a slight diminution of coercive force.

A comparison of (*b*) and (*c*) shows that an increase of the reduction temperature accompanied by a diminution of the duration of reduction caused an increase of the remanence and a small diminution of the coercive force.

In (*c*) is shown the influence of the degree of compression.

Example 4

A solution containing iron formate and cobalt formate was prepared, with iron and cobalt content of 95 and 5 parts, respectively. The decomposition and reduction was carried out as described above. The reduction temperature was 320° C., the duration of reduction was one hour and the delivered quantity of hydrogen about .12 gram per minute per gram of salt. A magnet compacted to a density of 5.5 grams per cubic centimeter had a coercive force of 510 oersteds and a remanence of 7150 gausses.

Example 5

An iron powder was prepared by bubbling a mixture of iron carbonyl vapor and hydrogen through an oil bath at 300° C. A magnet compacted from this powder with a density of 5 grams per cubic centimter had a coercive force of 450 oersteds and a remanence of 4200 gausses.

While I have specifically described certain embodiments of the invention, the invention is not limited thereto but may be otherwise embodied and practiced within the scope of the following claims.

What I claim is:

1. The process of making permanent magnets which comprises decomposing and reducing at a temperature below 500° C. a carbon and oxygen containing compound of ferromagnetic metal which is reducible at such temperature to produce a ferromagentic powder containing carbon of the order of 0.2 to 2.5% and traces of oxygen, shaping magnets from the powder by compacting it at a temperature below 500° C. and at which objectionable crystal growth does not occur, and magnetizing the so shaped agglomerate.

2. The process of making permanent magnets which comprises decomposing and reducing at a temperature below 450° C. a carbon and oxygen containing compound of ferromagnetic metal which is reducible at such temperature so as to produce a ferromagnetic metal powder containing carbon of the order of 0.2 to 2.5% and traces of oxygen in which the elementary crystals are of colloidal dimensions as indicated by X-rays, shaping magnets from the powder by compacting it at a temperature below 450° C. and at which objectionable crystal growth does not occur and magnetizing the so shaped agglomerate.

3. The process of making permanent magnets which comprises decomposing at a temperature below 500° C. and subsequently reducing by means of a reducing gas at a temperature below 500° C. a carbon and oxygen containing compound of ferromagnetic metal which is reducible at such temperature so as to produce a ferromagnetic metal powder containing carbon of the order of 0.2 to 2.5% and traces of oxygen, shaping magnets from the powder by compacting it at a temperature not higher than that at which it was reduced, and magnetizing the so-shaped agglomerate.

4. The process of making permanent magnets which comprises decomposing at a temperature below 450° C. and subsequently reducing by means of dry purified hydrogen at a temperature below 450° C. a carbon and oxygen containing compound of ferromagnetic metal which is reducible at such temperature so as to produce a ferromagnetic metal powder containing carbon of the order of 0.2 to 2.5% and traces of oxygen, shaping magnets from the powder by compacting it at a temperature not higher than that at which it was reduced, and magnetizing the so shaped agglomerate.

5. The process of making permanent magnets which comprises decomposing iron formate at a temperature between 275 and 400° C. and subsequently reducing it by means of dry purified hydrogen at a temperature between 275 and 400° C. so as to produce an iron powder containing carbon of the order of 0.2 to 2.5% and traces of oxygen, shaping magnets from the powder by compacting it at a temperature not higher than that at which it was reduced, and magnetizing the so shaped agglomerate.

6. The process of making permanent magnets which comprises decomposing a solid pulverulent carbon and oxygen containing compound of ferromagnetic metal which is reducible at a temperature below 500° C. through heating it in a closed vessel at a temperature of about 300 to 325° C., while permanently extracting the gases resulting from said decomposition, transferring in a second vessel the decomposed powder obtained, passing through said decomposed powder at a temperature of about 325° C. and under a sufficiently high pressure to insure a thorough mixing with said powder, a current of dried and purified hydrogen in excess to produce a ferromagnetic powder containing carbon of the order of 0.2 to 2.5% and traces of oxygen, transferring said ferromagnetic powder directly into a liquid protecting it from oxidation, shaping magnets from the powder by compacting it at a temperature below 325° C. and at which objectionable crystal growth does not occur, the hydrogen passed through the decomposed powder being recycled after having received the necessary quantity of fresh hydrogen and being purified and dried, and magnetizing the so shaped agglomerate.

LOUIS NÉEL.

References Cited in the file of this patent

UNITED STATES PATENTS

Number	Name	Date
1,044,763	Ekstrom	Nov. 19, 1912
1,174,727	Jones	Mar. 7, 1916
1,865,180	Faragher	June 28, 1932
1,982,689	Polydoroff	Dec. 4, 1934
1,986,197	Harshaw	Jan. 1, 1935
2,096,009	Schmid	Oct. 19, 1937
2,120,958	Coons	June 14, 1938
2,196,824	Dahl et al.	Apr. 9, 1940
2,239,144	Dean et al.	Apr. 22, 1941
2,315,302	Volterra	Mar. 30, 1943
2,427,018	Nesbitt	Sept. 9, 1947

FOREIGN PATENTS

Number	Country	Date
423,823	Great Britain	Feb. 8, 1935
239,381	Switzerland	Feb. 1, 1946
590,392	Great Britain	July 16, 1947
610,514	Great Britain	Oct. 18, 1948