US 20040014531A1

(19) **United States**

(12) **Patent Application Publication** (10) **Pub. No.: US 2004/0014531 A1**

**Ziener-Gundersen** (43) **Pub. Date: Jan. 22, 2004**

(54) **DEVICE FOR TRAINING THE CORRECT SWING FOR A CLUB**

(76) Inventor: **Dag H. Ziener-Gundersen**, Asker (NO)

Correspondence Address:
**Russell J. Egan**
**Suite 120**
**908 Town & Country Blvd.**
**Houston, TX 77024-2221 (US)**

(21) Appl. No.: **10/197,452**

(22) Filed: **Jul. 17, 2002**

**Publication Classification**

(51) **Int. Cl.**[7] ..... **A63B 69/36**

(52) **U.S. Cl.** ..... **473/222**

(57) **ABSTRACT**

A device for improving the performance of a player, particularly the repetitive correct swinging of a club, is preferably attached to a standard club shaft and has a housing containing at least one processor attached to X Y and Z accelerators. The processor is further attached to data storage and a power supply. The processor can further be connected to a radio and/or IR transmitter as well as a visual display means. A plurality of switches are provided to control on/off, mode selection, storage, etc. The visual display can be either an array of light-emitting diodes (LEDs) or a liquid crystal display (LCD) either one of which will display either the path of the club moving through a pre installed "master" swing or a swing derived from sampled swing data.

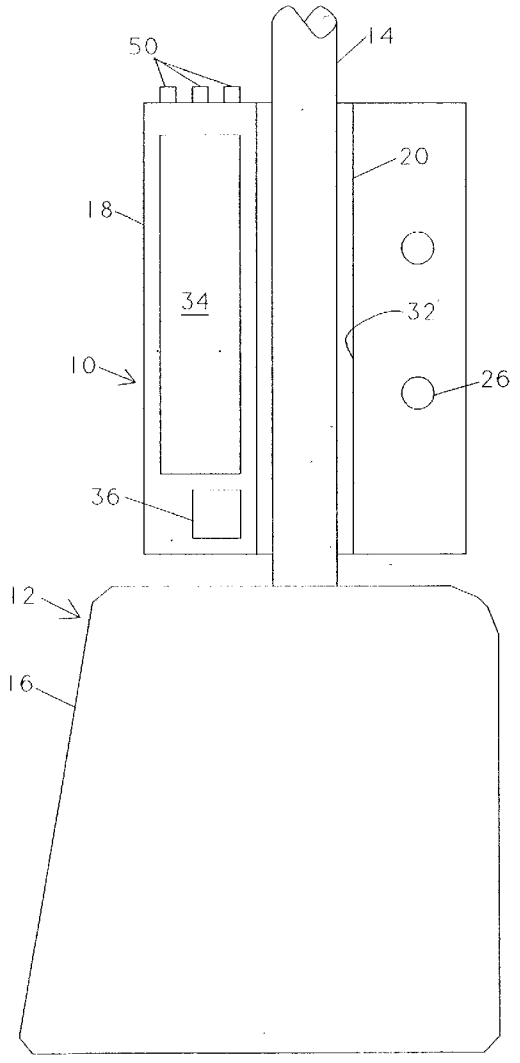

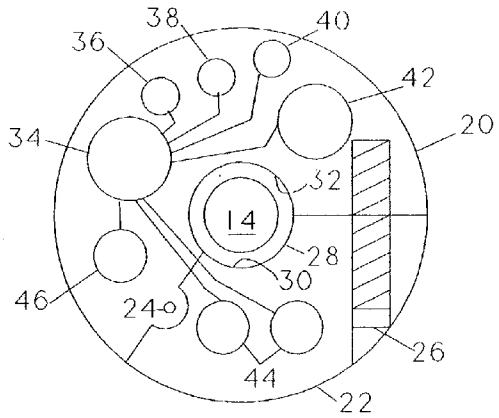
38
40
36
42
34
20
32
14
28
30
46
24
26
44
22

FIG. 2

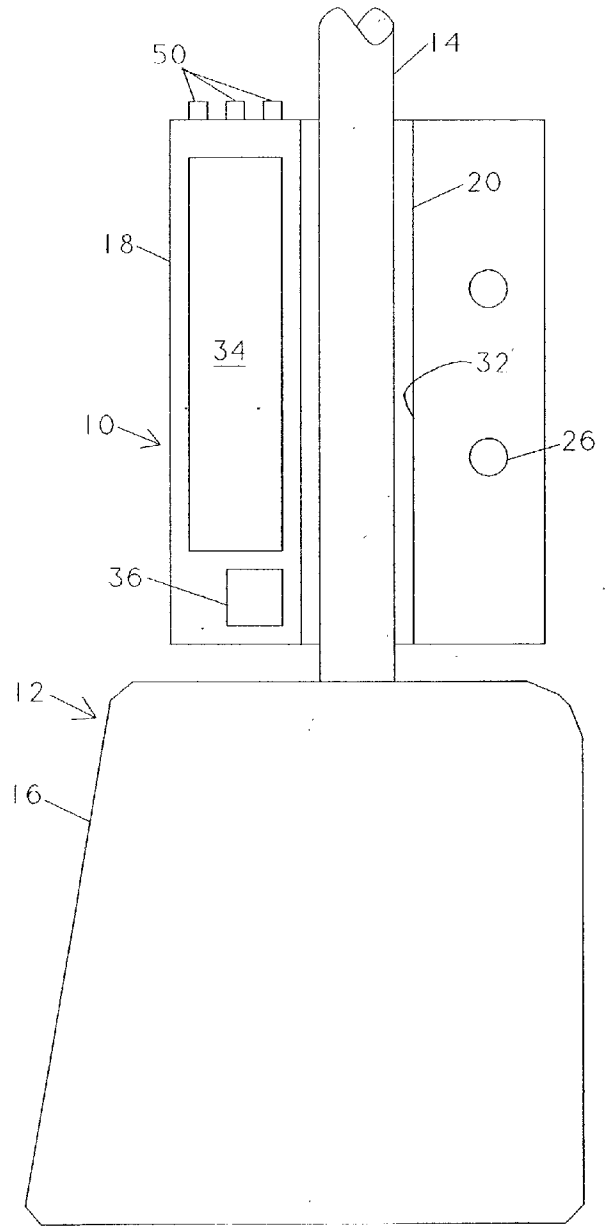
50
14
20
18
34
32
10
26
36
12
16

FIG. 1

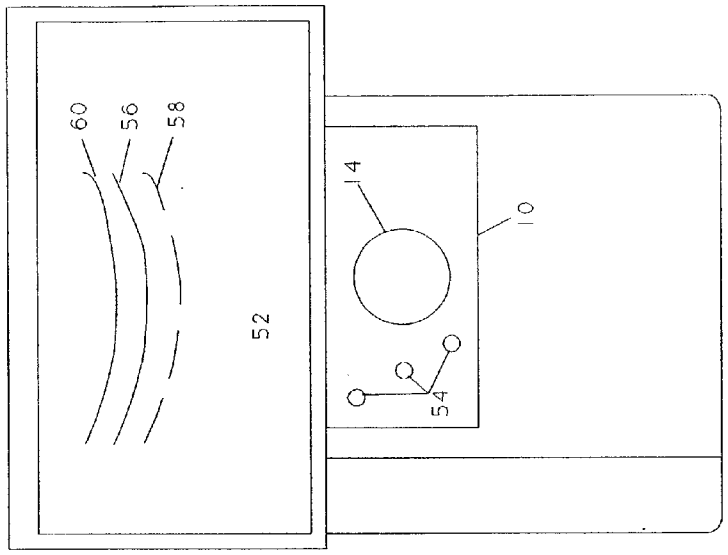


FIG. 4

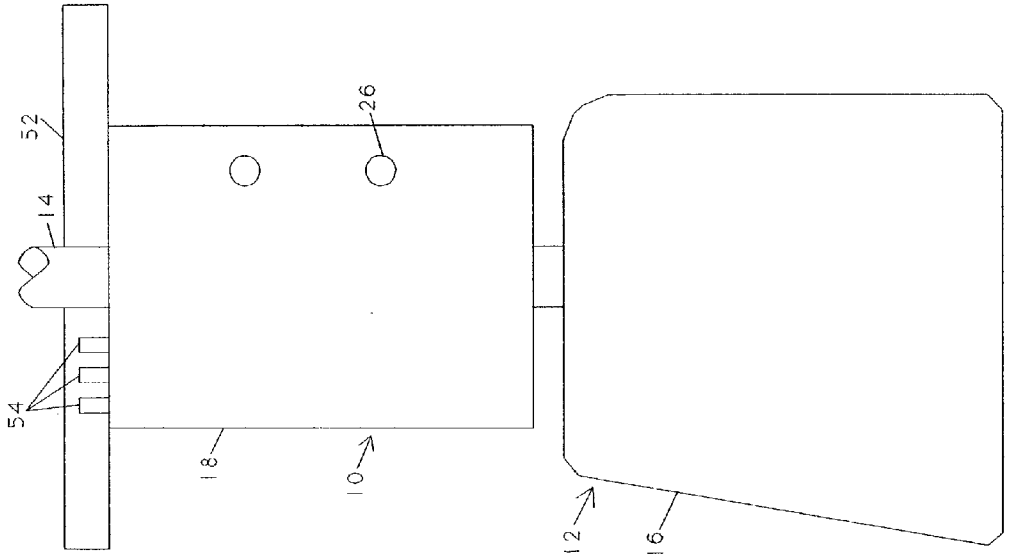


FIG. 3

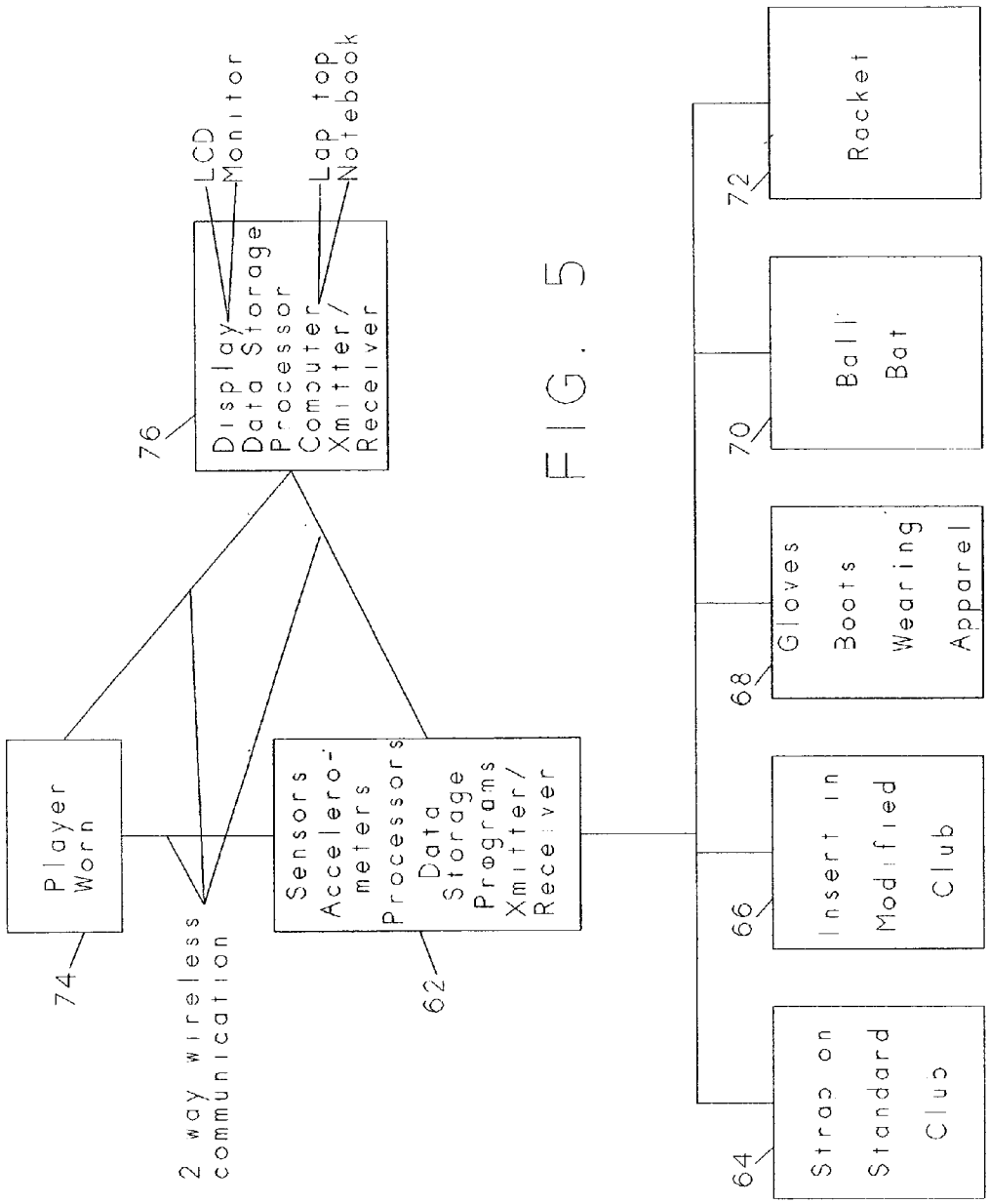
Display
Data Storage
Processor
Computer
Xmitter/
Receiver
LCD
Monitor
Lap top
Notebook
76
Player
Worn
74
2 way wireless
communication
Sensors
Accelero-
meters
Processors
Data
Storage
Programs
Xmitter/
Receiver
62
Strap on
Standard
Club
64
Insert in
Modified
Club
66
Gloves
Boots
Wearing
Apparel
68
Ball
Bat
70
Racket
72

FIG. 5

# DEVICE FOR TRAINING THE CORRECT SWING FOR A CLUB

## CROSS REFERENCE TO RELATED APPLICATION

[0001] The present invention constitutes an improvement over the devices described in my U.S. patent application Ser. No.09/048,475 filed Mar. 26, 1998, now U.S. Pat. No. 5,941,779 issued Aug. 24, 1999 and in my U.S. patent application Ser. No. 09/541,251 filed Apr. 3, 2000.

## BACKGROUND OF THE INVENTION

[0002] 1. The Field of the Invention

[0003] The present invention pertains to a device which can be readily attached to a conventional club for teaching a player to have a better swing thereby improving the player's game score. In particular, the present invention relates to a device which is clipped onto a conventional club, or inserted into a cavity in the club and will give a sensed output whenever there is a deviation from a programmed swing.

[0004] 2. The Prior Art

[0005] The popularity of the game of golf has produced a wide variety of gadgets which are intended to train a golfer to have the correct swinging motion with a golf club from starting with addressing the ball through, and including, the follow through. These gadgets can be generally classified into two categories. The first is a body restraint which is some form of harness placed on the golfer's person allowing only limited movement, which movement is supposedly the correct movement for the desired swing. The theory is that the golfer will train while wearing this and learn the correct swinging motion. The problem with this type of device is that the golfer can exert effort against the restraint, while training, and therefor does not necessarily learn the correct motion. In this instance, when the restraint is removed, the golfer continues to exert the same effort which results in a distorted swinging motion and a poor shot. Such devices are cumbersome to put on and therefor are not conducive to use for a practice swing on the course immediately prior to taking a scoring shot. The second type of gadget is one which controls the motion of the club. This is usually some form of guide rails which restrict the club movement, rather than the golfer, to the supposed desired path of the club head. Again the problem is that the golfer gets used to relying upon the gadget for club control rather than learning the correct swing for himself This second type of gadget is usually of sufficient structure that it is not readily portable. Clearly it could not be carried onto a golf course and used for a practice swing immediately prior to taking a scoring shot.

[0006] There are a variety of similar devices intended to teach correct swinging motions for other sports, such as baseball and tennis. However, all of these devices suffer from the same problems as those that are found in the above discussed devices.

## SUMMARY OF THE INVENTION

[0007] The subject device addresses the problem a player has in achieving a correct and reparative swing which will allow him to hit the ball properly. The performance of a good swing ensures that the swing follows a consistent path from a start, to hitting the ball and the follow through. During the back swing and the forward swing, the club should follow the exact same path. The present invention addresses this problem by providing a device that is attached to a conventional sports club. The device is equipped with at least one motion sensor element which will provide an indication to the player when the subject club has moved out of its desired path. The object is to ensure that the player learns to maintain a natural and correct swing without bringing the club out of a position which will impair the possibility of hitting a ball correctly. The device must have sufficient ruggedness to withstand the forces generated during the swing as well as those generated by striking the ball, which may be a standard ball, training ball or the like.

[0008] The present invention is intended to overcome the above noted problems of both types of prior art devices by providing a device, which can either be an attachment for a standard club or inserted into a cavity in a modified club, and then be carried onto the course and used for a practice swing immediately prior to taking up a club for a scoring swing.

[0009] The present invention relates to a device to be clipped onto a conventional club or inserted into a preformed cavity in the club for teaching players to have a better swing thereby improving their game score. In particular, the present invention relates to a device which will give a sensed input, through audio, tactile and/or visual feed back, to the player when there is any deviation from a programmed swing. The visual display of the information can be shown on an electronic display directly attached to the device and/or on a remote display, such as any hand held, portable, or desk top computers having the capability of sending and receiving signals from the device and displaying the transmitted data. The display could include LCD (liquid crystal display) carried on the golfer's arm or as a flip down pair of glasses or as a flip down form a cap brim. The electronic device will further be sued for programming or for real time interaction with the device.

[0010] While the present invention is described in a device for teaching a correct swing for golf the principles employed therein can be applied to other sporting activities such as hockey, baseball, tennis, etc. in which a stick, a bat, a racquet, glovers or boots, etc. must be properly swung. For the sake of simplicity of description, only a golfer and golf club will be discussed as the example.

[0011] The subject device addresses the problem a golfer has in achieving a correct and repetitive golf swing which will allow him to hit the golf ball properly every time. The essence to a good shot lies in the performance of the swing to ensure that the club follows a consistent path starting with addressing the ball and continuing through the back swing, the forward swing, hitting the ball and the follow through. During, the club should follow the exact predetermined path every time to become the selected and preferred swing of the golfer.

[0012] The present invention is intended to overcome the above noted problems of both types of prior art devices by providing an attachment for a standard golf club, which can be carried onto the course and used for a practice swing immediately prior to taking up a club for a scoring swing.

[0013] The principles of the present invention can be applied to other forms of athletic events, such as baseball, hockey, tennis, etc., wherein a bat, stick, gloves, or boots or the like are used to hit a ball, a puck, etc. In each instance it is the object to swing the bat, etc. through a defined path so as to properly strike the ball etc. in such manner as to get the desired result. This would, of course, include determining the proper angle of the "face" of the bat etc. for giving the ball etc. the desired loft.

[0014] The principles of the present invention can be applied to other forms of athletic events requiring throwing for distance and/or accuracy, such as the field events of track, ie., the javelin, the discus, etc., in which repeated correct motion produced the best results.

[0015] The subject invention preferably is a unit attached to any club but could also be received in a cavity in the head of a golf club.

[0016] The described device is provided with a plurality of sensor means in the form of sensors and accelerometers, Programmed Logic Circuitry (PLC) connected to receive data from the sensor means and provide a hardwired output or by radio link to a display means, such as a Liquid Crystal Display (LCD), an array of Light Emiting Diodes (LED) or other visual display means mounted on the club head or carried as a separate display on the golfer's arm or the like communicating either by wire or wireless.

[0017] The principles of subject invention could be applied to training devices for sticking other types or balls, etc., with bats, sticks of the like as in the games of baseball, hockey, tennis, etc.

## BRIEF DESCRIPTION OF THE DRAWING

[0018] The present invention will now be described, by way of example, with reference to the accompanying drawings, in which:

[0019] **FIG. 1** is a diagrammatic vertical section through the present invention mounted on a conventional golf club;

[0020] **FIG. 2**. is a diagrammatic horizontal section taken along line **2-2** in **FIG. 1**;

[0021] **FIG. 3** is a diagrammatic side elevation of an alternate embodiment of the subject invention inserted into a golf club head;

[0022] **FIG. 4** is a diagrammatic top plan view taken along line **4-4** of **FIG. 3** showing the visual display means of the present invention; and

[0023] **FIG. 5** is a block level schematic representation of the versitility of the present invention.

## DETAILED DESCRIPTION OF AN EMBODIMENT OF THE PRESENT INVENTION

[0024] The present invention will now be described in an embodiment wherein the invention is selectively attached to the shaft, near the head, of a conventional golf club. It is to be understood that the subject invention could also be received in a cavity in the head of a standard golf club. It is also to be understood that appropriately modified embodiments of the present invention could also be attachments to or incorporated as integral members of other swing training devices, for example racquets, bats, and sticks for training tennis and squash players, baseball players, and hockey players, respectively. Suitable embodiments could be made for just about any other sport where the player strikes at a target with a stick, bat, club, or paddle and a proper swing is required so as to impart the proper trajectory to the ball etc.

[0025] For the sake of simplicity, the subject invention **10** is shown and described with a conventional golf club **12** having a shaft **14** with a head **16** fixed to one end thereof The housing **18** of the present invention has a main housing **20** and a clamping plate **22** attached to the main housing at one end by a hinge **24** and adapted to be selectively secured at the other end to the main housing by screws **26** or the like. The main housing and the clamping plate together define a passage **28** for the shaft **14** of the club **12** with the surfaces **30, 32** forming the passage being adapted for gripping the shaft **14** in such manner that there is not movement relative to the shaft during swinging of the club. Orientation means **34, 36** are provided on the shaft **14** and housing **18**, respectfully, to insure that the device **10** is always in the same proper orientation each time it is applied to the shaft **14**. Orientation means **34** preferably is some sort of permanent indicia while orientation means **36** can be permanent indicia and/or sensing means.

[0026] The main housing **20** encloses a processor **38** which is attached to an X accelerator **40**, a Y accelerator **42**, and a Z accelerator **44**. The accelerometers **40, 42, 44** may be electronic, mechanical, optical or a combination thereof The processor is further attached to data storage means **46** and batteries **48**. In the embodiment shown in **FIGS. 1 and 2**, the processor **38** is further connected to a wireless transmitter **50**, for example radio or IR, while in the embodiment shown in **FIG. 3** the processor is connected to a visual display means **52** mounted on the top exterior surface of the main housing. The housing may optionally be provided with a plurality of switch means **54** to control on/off, mode selection, storage, etc. or the computer LCD may be provided with touch screen capability for making such selections.

[0027] The visual display means **52** can be either an array of light-emiting diodes (LEDs) or, preferably, a liquid crystal display (LCD) either one of which will display either the path of the club moving through a pre installed "master" swing or a swing derived from sampled swing data of the golfer. The device could also be set to input new data or for a training swing. These selections are made by the appropriate selection switch means **54** or by the above-mentioned touch screen at the computer.

[0028] The visual display is shown in **FIG. 4** where typically the preprogrammed swing **56** is shown in solid lines, a low swing **58** is shown in dotted lines, and a high swing **60** is shown in dashed lines and/or different colors may be used to display the various swings. Other data, such as club speed, slice degree, hook degree, loft degree, etc., can also be displayed in either numerical or graphic form on the same or different screens.

[0029] When the golfer wants to practice his swing, he takes the club in his hands and assumes a proper stance. Then he turns the device on. He makes his selection of function (i.e., will he use a preprogrammed swing or will he record the swing he will be making or work interactive with a program). He then addresses the ball and begins his back swing followed by the forward swing, striking the ball and follow through. As he makes these moves, the motion of the club will be sensed by the three accelerometers **40, 42, 44**. The outputs from the accelerometers will be processed by the programmable logic circuitry to produce a display indicating the proper swing and how and where the golfer deviated from this swing during his shot. Orientation means **36** can include a separate sensor to measure the placement of the unit relative to the shaft to insure that there has been no relative movement and/or to compensate for any movement that might occur.

[0030] The Programmable Logic Circuit program is set to start sampling after sensing an acceleration of the club and will sample, typically 500 samples, through a 2-3 second swing. The data storage will have sufficient capacity to store several swings.

[0031] The programmable logic circuit, with data storage, will have several features in usage. These include:

[0032] 1. The golfer can request to store data from a swing that the golfer, through practice, has determined is his "Master" swing. Then every swing will be compared with thisswing and the display will show how much and in which direction the golfer deviated from this master swing, ie., in his back swing, forward swing as well as rotation of the club, and any deviation from this master swing will be displayed.

[0033] 2. A master swing, such as a swing typically used by a successful professional golfer, can be programed into the unit so that the golfer is trained in achieving this swing. The same comparison and feed back is given.

[0034] 3. An especially memorable swing, either good or bad, can be stored for historic reason or for analysis later on to achieve the proper training in, for example, removing bad habits, etc.

[0035] 4. The golfer's swings can be used for on-line interactive communication with a PC or for historic usage from video games and other games such as virtual golf play etc.

[0036] 5. A set of head phones or ear plugs with a radio receiver will be used for tactile sounds or voice commands.

[0037] The subject invention can be made either as a clip on a device with an integrated display or as a clip on a device without a display but with radio or IR Interface to an external monitoring unit which preferably is a small hand-held computer such as an I pac, notebook in combination with head phones.

[0038] **FIG. 5** is a block level schematic diagram illustrating the versatility of the subject invention. The sensing unit **62** contains the sensors, accelerometers, processors, data storage, programs, power supply, and wireless transmitter receiver. The unit can be strapped onto a club **64**, received in a cavity in a club **66**, attached to a glove or boot **68**, attached to or received in the handle of a bat (baseball, cricket, etc.) **70**, or the handle of a racket-(tennis; squash, etc.) **72**. The player can wear a headset **74** to receive information of the swing. Instead of a headset, a display could be worn on the arm, on flip down glasses, or as a flip down from the brim of a hat. A stand alone unit **76** can be placed where it can be viewed by the player and/or coach. This unit would include a computer, preferably a lap top or notebook for portability purposes, connections to a large screen monitor, processor, data storage, wireless transmitter/receiver and power supply.

[0039] It is within the scope of the invention to have swing related data, such a swing speed, slice, hook, contact on the face of the club, and even the stance of the player.

[0040] The present invention may be subject to many modifications and changes without departing from the spirit or essential characteristics thereof Therefore, the present embodiments should be considered in all respects as illustrative and not restrictive of the scope of the invention as defined by the appended claims.

I claim:

**1**. A device for improving the performance of a player, particularly the repetitive correct swinging of a club, comprising:

a housing assembly adapted to be secured to a conventional club, said housing defining a cavity having therein an array of accelerometers connected to logic means programmed for a predetermined correct swing and responsive to said accelerometers;

whereby display is made of the player's swing.

**2**. The device according to claim 1 wherein said logic means contains preprogrammed data for a correct swing which data is compared with the output of said accelerometer array and displayed on said display means.

**3**. The device according to claim 1 wherein said logic means accepts data from said accelerometer array and defines a correct swing which is displayed on said display means.

**4**. The device according to claim 1 further comprising transmitter/receiver means within said housing for transmitting/receiving the data of the swing

**5**. The device according to claim 4 wherein said data is transmitted by radio to a golf pro observing the golfer and/or to a head set worn by the golfer.

**6**. The device according to claim 4 wherein said data is transmitted/received to/from a computer.

**7**. The device according to claim 1 further comprising visual display means formed by an array of light emitting diodes (LEDs) arranged to display a programmed swing and/or the actual swing.

**8**. The device according to claim 1 further comprising visual display means formed by a liquid crystal display on which a preprogrammed swing is primarily displayed with the actual swing as noted by said first and second sensor arrays superimposed upon the primary display.

**9**. The device according to claim 4 wherein the device receives data and commands from a computer for interactive communication and learning.

**10**. A method for improving the performance of a player, particularly in sports requiring repetitive correct motions, such as swinging of a club, in order to achieve maximum results by said player, comprising the steps of

providing said player with a device adapted to be secured to a conventional club, said device having a housing defining a cavity with an array of accelerometers therein connected to logic means programmed for a predetermined correct motion and responsive to said accelerometers to generate data on said motion, visual means for displaying the results of said motion, means for transmitting said data by radio to a coach observing the player and/or to a head set worn by the player and/or transmitting/receiving said data to/from a computer;

said player executing the motion to be improved;

comparing the just completed motion with the desired motion, the player's history of said motion, and corrective action to be taken to improve said motion;

displaying said comparison

whereby the player is made aware of his motion and what corrective action must be taken.

* * * * *