Feb. 5, 1957 D. C. TRAVIS 2,779,951

ADJUSTABLE BED

Filed July 1, 1950 5 Sheets-Sheet 1

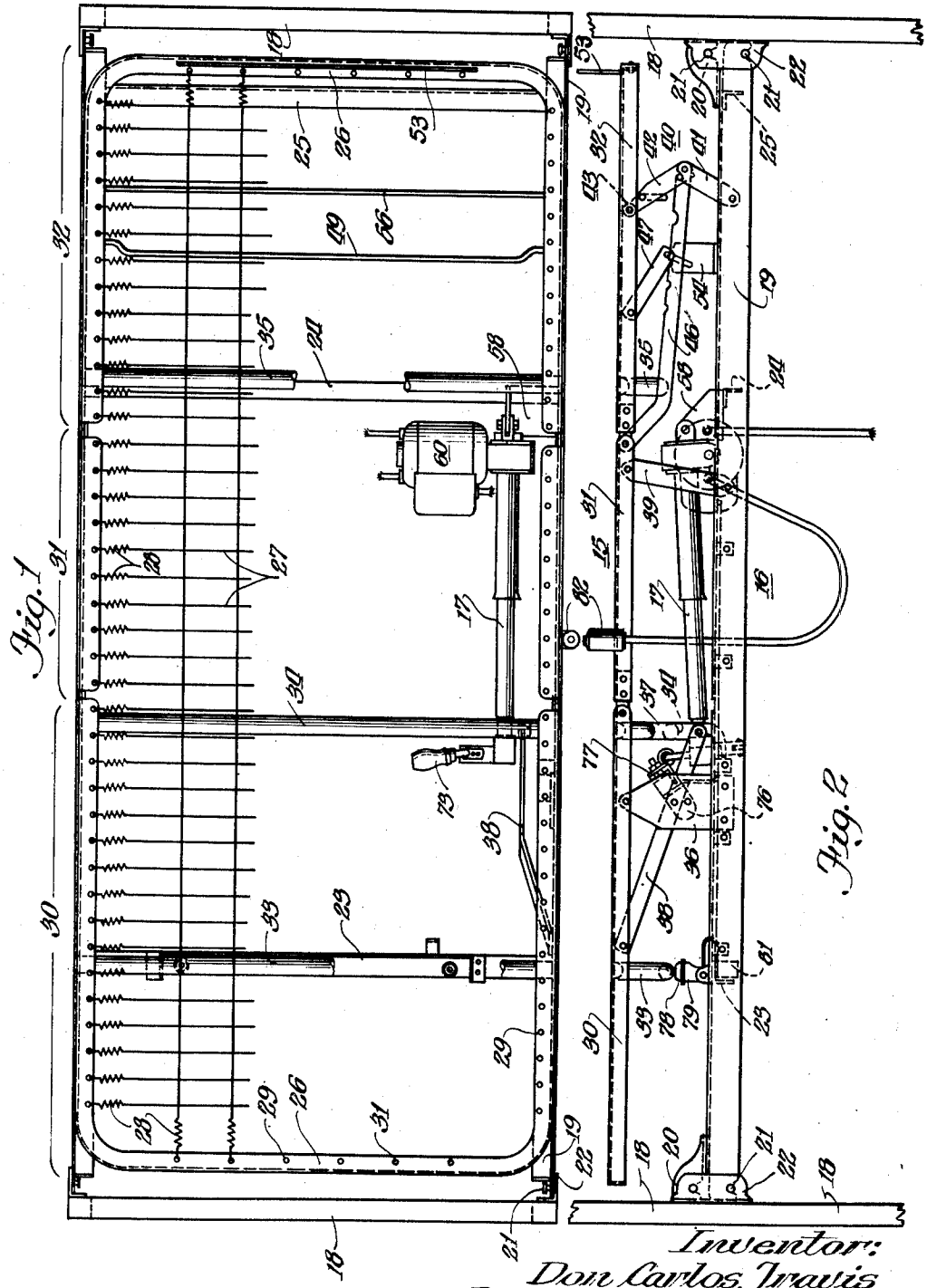

Inventor:
Don Carlos Travis
By: Soans, Pond & Anderson
Atty's.

Feb. 5, 1957 D. C. TRAVIS 2,779,951

ADJUSTABLE BED

Filed July 1, 1950 5 Sheets-Sheet 2

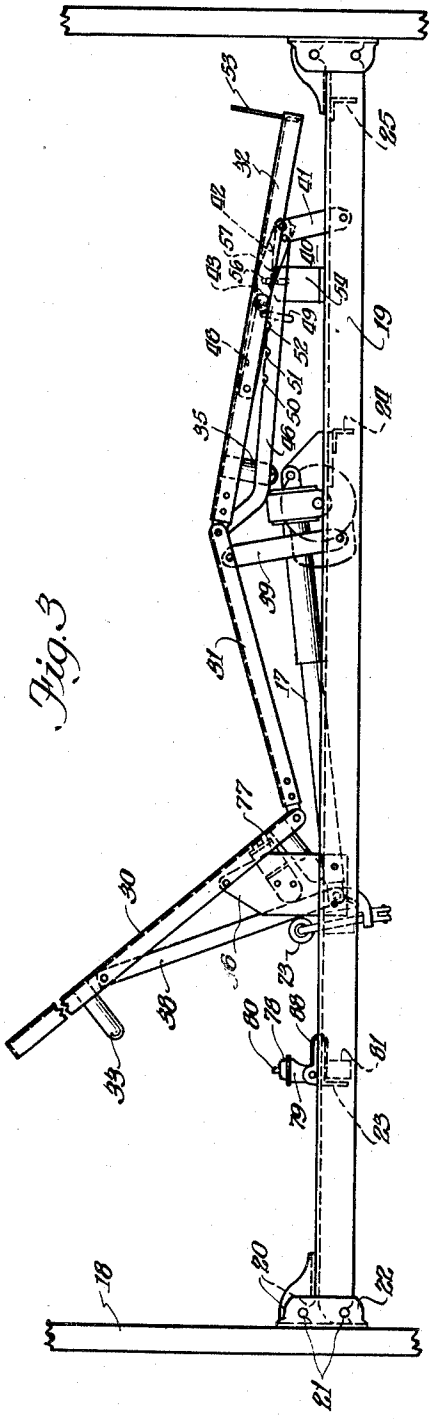

Fig. 3

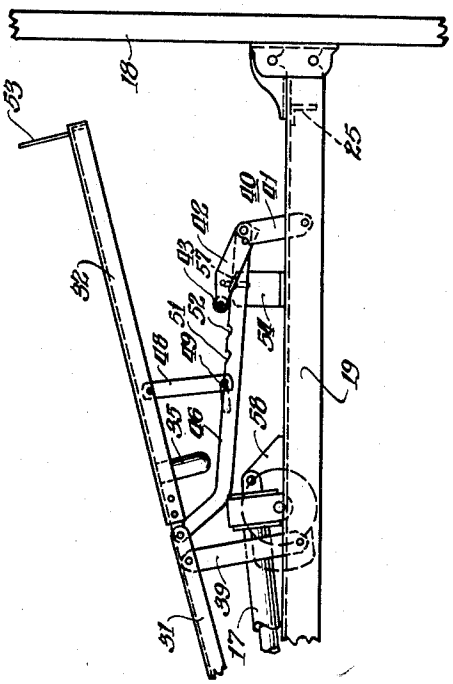

Fig. 5

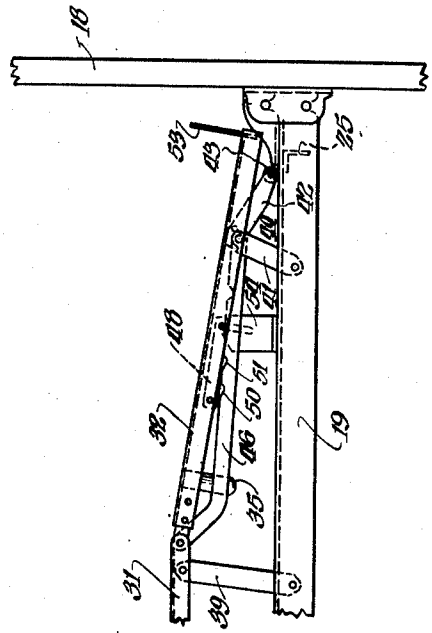

Fig. 4

Inventor:
Don Carlos Travis
By: Soans, Pond & Anderson
Atty's.

ADJUSTABLE BED

Filed July 1, 1950 5 Sheets-Sheet 3

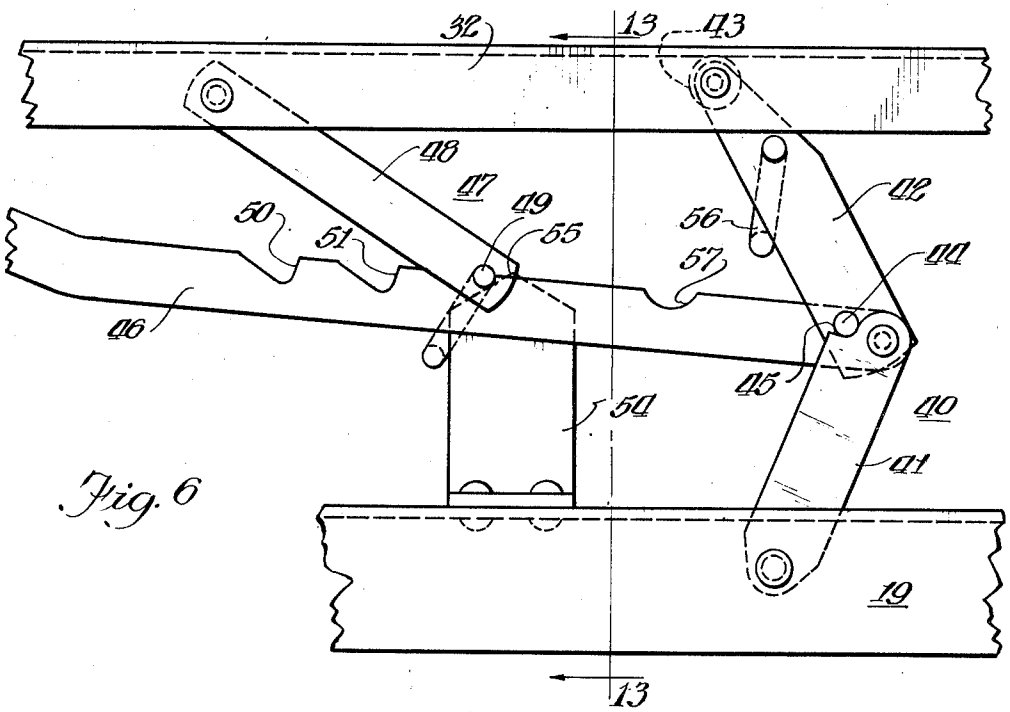

Fig. 6

Fig. 9

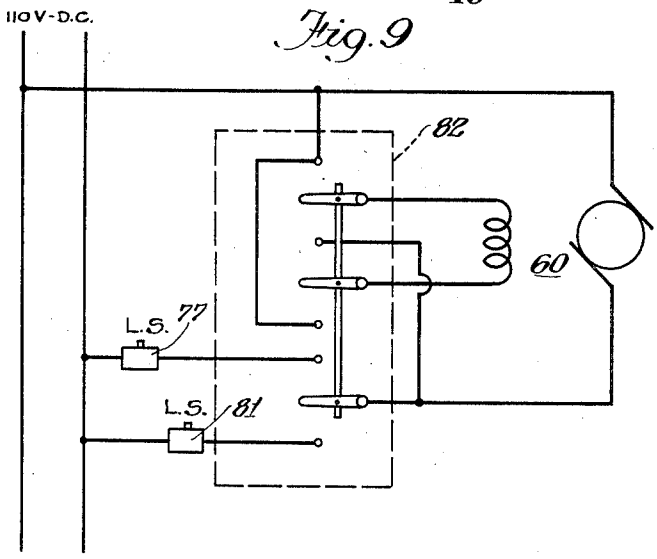

Inventor:
Don Carlos Travis
By: Soans, Pond & Anderson
Atty's.

Feb. 5, 1957 D. C. TRAVIS 2,779,951

ADJUSTABLE BED

Filed July 1, 1950 5 Sheets-Sheet 4

Fig. 7

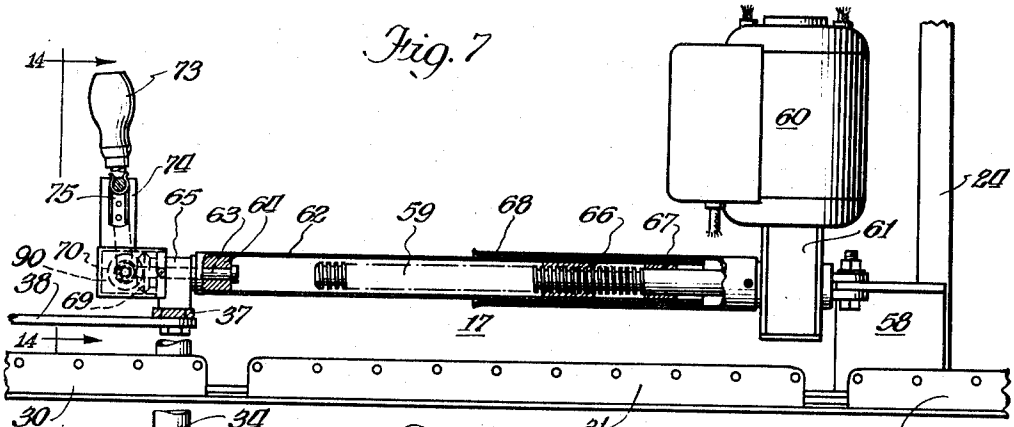

Fig. 8

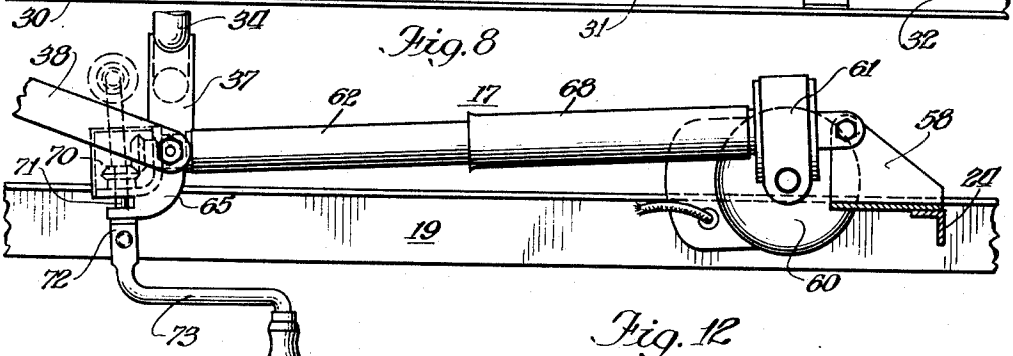

Fig. 10

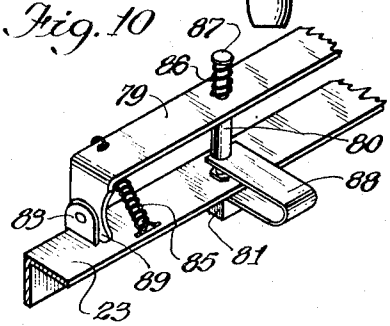

Fig. 11

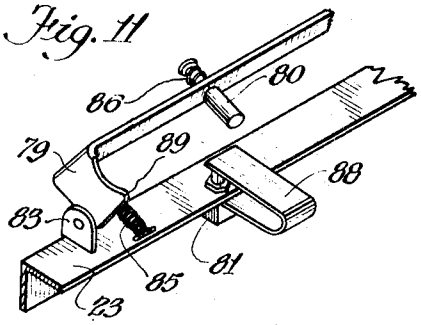

Fig. 12

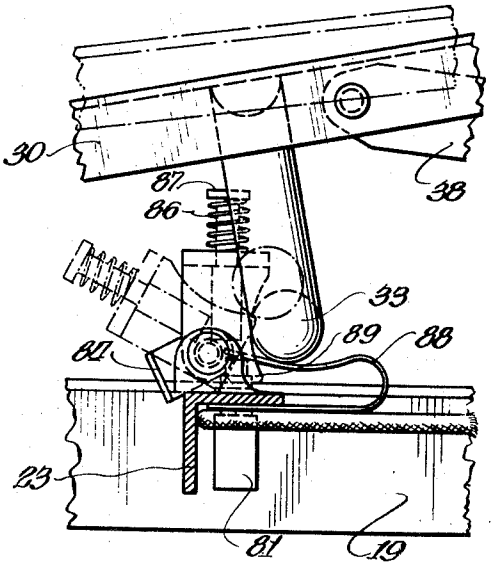

Inventor:
Don Carlos Travis
By: Soans, Pond & Anderson
Atty's.

Feb. 5, 1957 D. C. TRAVIS 2,779,951

ADJUSTABLE BED

Filed July 1, 1950 5 Sheets-Sheet 5

Fig. 13.

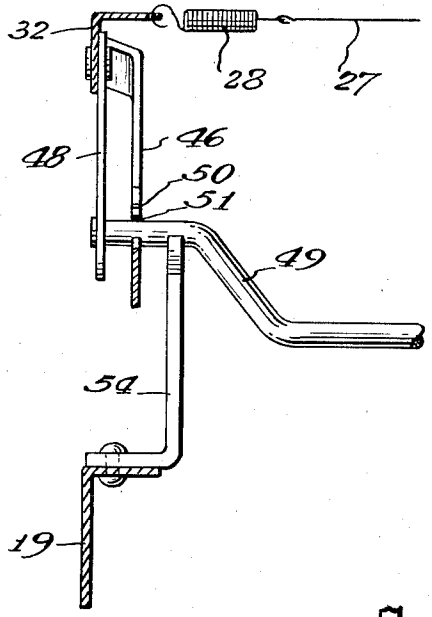

Fig. 14.

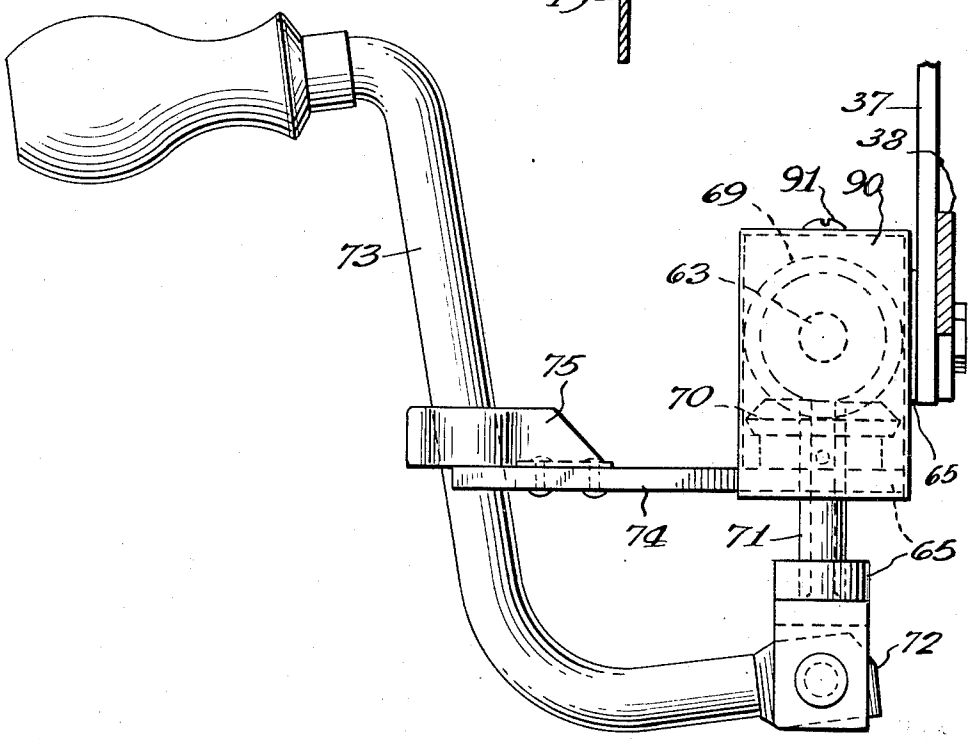

Inventor
Dow Carlos Travis
By Soans, Pond & Anderson
Attorneys

United States Patent Office

2,779,951

Patented Feb. 5, 1957

1

2,779,951

ADJUSTABLE BED

Don Carlos Travis, Kenosha, Wis., assignor to Simmons Company, New York, N. Y., a corporation of Delaware

Application July 1, 1950, Serial No. 171,654

8 Claims. (Cl. 5—69)

This invention relates generally to adjustable beds and, more particularly, to the type of bed having an articulated bed-bottom frame suitable for hospital use.

The main objects of the invention are to provide a bed bottom of the inclinable type which is motor-actuated so as to be adjustable between a variety of positions with a minimum of effort; to provide an improved motor-actuated adjusting means for a bed of this type; to provide a motor-actuated bed bottom which is movable out of horizontal position to an inclined position and vice versa by the action of an electric motor, the power connection to which is automatically interrupted at limit positions; to provide a bed of this type in which alternative limit positions of the head section of the bed bottom are selectible at and below the normal horizontal bed position; to provide an articulated bed bottom in which the foot section is indirectly actuated through its connection with an adjacent bed bottom section but which is separately manually adjustable to several alternative positions and returnable automatically to the horizontal from at least one of said alternative positions as the remaining bed bottom sections are being shifted from an inclined position to the horizontal bed position.

Other objects will appear and the invention will be better understood by referring to the following specification and to the accompanying drawings in which:

Figure 1 is a plan view of one embodiment of the bed bottom of the present invention;

Figure 2 is a side elevation of the bed-bottom illustrated in Figure 1, showing the bed bottom in horizontally-extended bed position;

Figure 3 is a similar side elevational view showing the bed bottom sections in an inclined position;

Figure 4 is a side elevation of the foot section of the bed-bottom showing the lower limit of independent movement of the foot section;

Figure 5 is similar to Figure 4 and shows the foot section at its extreme upper position;

Figure 6 is an enlarged side elevation of a portion of the linkage which supports the foot section of the bed;

Figure 7 is a plan view of the motor-actuated adjusting means which has been partially cut away to show the inner construction;

Figure 8 is a side elevation of the mechanism shown in Figure 7;

Figure 9 is a schematic diagram of a circuit arrangement which may be employed with the motor-actuated bed of the present invention;

Figures 10 and 11 are perspective views of the shiftable stop which determines the lower limit positions of the head section of the bed;

Figure 12 is a side elevation of the stop shown in Figures 10 and 11, showing the operative engagement of a portion of the head section with the stop;

Figure 13 is a fragmentary sectional view of the foot section supporting linkage, taken on the line 13—13 of Figure 6; and

Figure 14 is a fragmentary sectional view of the bed bottom adjusting mechanism, taken on the line 14—14 of Figure 7.

2

The illustrative embodiment of the invention depicted in the drawings comprises an articulated or plural section bed bottom 15 which is pivotally mounted upon a sub-frame or underframe 16 for swinging and shifting movement between a horizontally-extended bed position (Figures 1 and 2), and an inclined position (Figure 3), with an infinite number of intermediate positions. To shift the bed bottom 15 between its several positions, motor-driven adjusting means 17 are connected between the sub-frame 16 and one of the sections of the articulated bed bottom 15. The sub-frame is supported at either end upon a pair of vertical end frames 18 in the usual manner to dispose the bed bottom at a convenient level above the floor.

The sub-frame 16 includes a pair of horizontal side rails 19 which are desirably formed of angle iron and which are provided at their respective ends with a pair of hooks 20 adapted to engage a pair of spaced pins 21 on a mounting bracket 22 secured to the end frames 18. To complete the sub-frame and to provide convenient mountings for various parts of the structure, a number of cross members 23, 24 and 25 are distributed at intervals along the side rails 19 and rigidly attached thereto. The cross members, like the side rails, are desirably fabricated from angle iron.

The articulated bed-bottom 15 comprises a generally rectangular border frame 26, preferably also formed of angle iron, and a bed fabric 27, which is attached to the border frame 26 by a plurality of helical tension springs 28 attached at small holes 29 spaced about the inner periphery of the frame. The fabric 27 may be of the wire link type, as illustrated, or any other convenient form.

The frame 26 is jointed along its sides to divide the bed bottom into hingedly connected sections including a head section 30, an intermediate section 31 and a foot section 32. To prevent inbowing of the sides of the frame under the weight of the mattress and the occupant of the bed, spreader bars 33, 34, and 35, extending transversely of the frame beneath the fabric 27, are distributed along the bed bottom between its ends. These spreader bars are desirably formed of metal tubing and are U-shaped or downwardly bowed to provide clearance for the resilient downward deflection of the bed fabric 27. The spreader bars 34 and 35, forming part of the head and foot sections, are desirably placed as close as practicable to the intermediate section of the bed so as to eliminate the need in that section for a similar spreader bar to thereby provide clearance space for the mounting of the motor-driven adjusting means on the sub-frame in a manner later to be more fully described.

The head section 30 is pivotally supported adjacent its hinged connection with the intermediate section upon a pair of opposed brackets 36 upstanding from the sub-frame side rails 19, the larger, end portion of the head section overhanging the brackets 36 in cantilever fashion. Depending from the head section and fixedly attached thereto is a vertical brace 37 and a diagonal brace 38, the lower ends of which are pivotally connected to the extensible motor-driven adjusting member 17 with which the bed bottom 15 is shifted. The lower portion of the diagonal brace 38 is offset inwardly from the side of the frame 26, and the vertical brace 37 is attached to the spreader bar 34 rather than directly to the side of the frame 26 so as to dispose the extensible member 17 well between the side rails 19. As the member 17 is extended, the overhanging end portion of the head section 30 is swung upwardly about its pivotal connection with the brackets 36 and conversely, as the extensible member 17 is shortened, the end portion is swung downwardly. In

either case the shorter portion of the head section on the other side of the bracket 36 swings in the opposite direction, carrying with it the intermediate section 31 of the bed bottom.

The intermediate section 31 is supported at one end by its hinged connection to the head section 30 and at a point adjacent its other end by shiftable links 39 pivotally connected at their upper ends to the intermediate section 31 and at their lower ends to the sub-frame side rails 19. It may thus be seen that the intermediate section moves in response to the head section through a definite path of movement determined by its connection to the head section and to the shifting links 39.

The foot section 32 is supported by its hinged connection to the intermediate section 31 and by a pair of jointed links 40 one at either side of the bed bottom.

Each supporting link 40 comprises a lower section 41 pivotally mounted on the side rail 19 and an upper section 42 pivoted to the lower section. The foot section of the bed bottom normally rests upon rollers 43 mounted at the upper end of the supporting links 40, which are prevented from collapsing by the engagement of a pin 44 on the upper link section with an abutment 45 on the lower section, as is most clearly shown in Figure 6. This arrangement however also permits the upper link section 42 to be swung independently toward the foot end of the bed, out of supporting position, for a purpose which will subsequently appear. The upper and lower sections of the jointed link 40 are normally moved in unison by a draw bar 46 pivotally connected at one of its ends to the intermediate section 31, and at its other end to the joint between the upper and lower sections of the link 40. It is therefore apparent that the foot section of the bed is automatically shiftable in response to the movement of the intermediate section 31 through a path determined by its pivotal connection with the intermediate section and by the rise and fall of the rollers 43 as the jointed links 40 are shifted by the draw bars 46.

Thus, when the head section is horizontally disposed, the intermediate and foot sections are coplanarly aligned with the head section to form a bed, as illustrated in Figures 1 and 2, and as the head section is raised, the intermediate and foot sections follow the movement of the head section until the bed bottom assumes a chair-like atttiude, shown in Figure 3, when the head section reaches its upper limit position. In this position of the bed bottom the intermediate section and the foot section both slope downwardly from their common hinge connection so that the knees of the bed occupant may be comfortably flexed. However, it will be apparent that because the foot section 32 is attached at only one of its ends, it is independently swingable about its hinged connection with the intermediate section.

To permit the adjustment of the foot section independently to the head and intermediate sections, a pawl 47 is pivotally suspended from the foot section at a point between the intermediate section 31 and the jointed link 40. This pawl comprises a pair of depending links 48, one at either side of the foot section, connected by a U-shaped cross rod 49. To support the foot section above its normal position as determined by the roller 43, a number of notches or abutments 50, 51 and 52 are provided in the upper edge of the draw bar 46 for selective engagement by the cross rod 49 of the pawl. These notches may be located so as to achieve any desired super-elevation of the foot section in any practicable number of steps. However, at least two of the notches, 50 and 52, are desirably located so that the foot section may in one instance be elevated to a position coplanar with the intermediate section while the head section occupies its extreme elevated position, as illustrated in Figure 5 and, in another instance to a horizontal position while the head section remains so elevated, both attitudes being important in certain types of fracture cases. To raise the foot section to its super-elevated positions, as determined by the notches 50—52, a handle 53 is provided at the extreme end of the foot section 32 so as to be conveniently grasped by an attendant standing at the foot of the bed. This handle desirably extends across the end of the foot section of the bed as shown in Figure 1 and, furthermore, is of such height as to simultaneously serve as a retaining abutment for the mattress which would otherwise tend to creep longitudinally as the bed bottom is shifted from one position to another.

The horizontal attitude of the foot section, as determined by the engagement of the pawl rod 49 with the notch 52 when the head section occupies its upper limit position is, as mentioned above, extremely important in certain fracture cases. The amount of added elevation of the foot section thus produced, although critical, is not very great, but if the bed bottom were returned to bed position without disengaging the pawl from the notch 52, that added elevation of the foot section above its normally horizontal position atop the rollers 43 might seriously affect the patient-occupant. To prevent the consequences of such oversight, automatic means is provided for the return of the foot section to its normally-horizontal position on the rollers 43 as the bed bottom is restored to bed position.

In the illustrated embodiment this automatic return feature takes the form of a plate 54 extending upwardly from the side rail 19 and having an inclined upper surface 55 disposed in the path of the pawl rod 49 as the bed bottom is shifted from its angular position to its bed position. As the pawl rod engages the cam surface 55, it is forced upwardly out of the notch 52, as shown in Figure 6, permitting the foot section to come to rest on the rollers 43. As the bed bottom 15 is returned to its normal bed position, the rollers 43 travel upwardly in an arc about the pivotal connection of the link 40 with the sub-frame, and engage the underside of the foot section frame practically simultaneously with the disengagement of the pawl rod and notch.

As stated above, the upper and lower section are normally moved as a unit by the draw bar 46, but to permit the foot section 32 to be depressed below its normal position as determined by its engagement with the rollers 43 at the upper link section 42, the upper section is separately swingable about the lower section 41 in a direction to disengage the pin 44 and abutment 45 until the roller 43 rests on the sub-frame side rail 19, as shown in Figure 4. With the jointed link 40 in this attitude, the foot section 32 of the bed bottom may be lowered until it rests upon the lower sections 41 of the links 40. To provide for the simultaneous movement of the outer sections 42, these sections are desirably provided with a connecting rod 56 extending between the sections. An additional notch 57, not engageable with the pawl rod 49, is provided in the draw bar 46 to provide clearance space for the cross rod 56 as the link 40 moves toward the head of the bed during movement of the bed bottom from its bed position to its inclined position, as shown in Figure 3.

The actuating means for effecting the movement of the head section 30, and hence the entire bed bottom 15, comprises an extensible member 17 pivotally connected at one end to an angle bracket 58 mounted on the cross member 24 of the sub-frame, and at its other end to the braces 37 and 38 depending from the head section 30. Within the extensible member is an elongated screw 59 which is turned by a motor 60 through a speed reduction unit 61 comprising a worm driven by the motor and a worm gear which is keyed or otherwise secured for rotation with the screw 59.

The screw 59 is journalled within the worm gear housing which constitutes a part of the member 17 and which is preferably formed integrally with the motor frame. The other element of the extensible member 17 comprises an elongated tube 62 having at one end a shaft extension 63 which is secured to the tube by means of a

plug 64 or other suitable means. The shaft extension 63 is journalled within a fitting 65 with which the member 17 is pivotally secured to the braces 37 and 38 depending from the head section of the bed bottom and through which the thrust exerted by the extensible member 17 is transmitted to the head section. Within the tube 62 adjacent its open end, there is secured a nut 66 engaging the threaded portion of the screw and a guide bushing 67 which is of such inner diameter as to slip freely over the threaded and unthreaded portions of the screw. The bushing 67 effectively journals the screw 59, thereby stiffening the extensible member 17 to prevent any tendency to flex and bind the nut 66 as a result of the dimensional allowances essential to a running fit between the nut and screw. An outer tube 68, fixedly mounted on the reduction gear housing, closely encompasses the nut tube 62 in telescope fashion and serves as a guard for the threaded portion of the screw which would otherwise be exposed when the member 17 is fully extended.

Keyed or otherwise fixed to the shaft extension 63 is a bevel gear 69 which engages a similar gear 70 fixed to a shaft 71 rotatably supported in the fitting 65 at right angles to the axis of the shaft extension 63. Pivotally connected to the shaft 71 by means of a suitable tongue-and-fork connection 72 is a manually operable crank 73 which is extensible into operating position beneath the sub-frame for rotation in a substantially horizontal plane, and retractable upwardly toward the bed fabric to a non-rotatable position in engagement with a forked locking bracket 74 extending inwardly from the fitting 65. To retain the crank in retracted position within the locking bracket, a spring clip 75 is provided. The gears 69 and 70 are normally covered by a box-like guard 90 which is fitted to the fitting 65 and secured in place thereon by a screw 91 (see particularly Fig. 14).

The operation of the actuating means is as follows: when the motor is energized and the screw 59 is rotated, the nut tube 62, restrained against rotation by the engagement of the manually operated crank 73 with the locking bracket 74, is advanced or retracted along the screw, thereby lengthening or shortening the member 17, to raise or lower the head section 30.

In the event of power failure, or for some reason it should be desirable to operate the bed manually, the crank 73 may be extended to its operating position and turned to rotate the nut-tube through the bevel gears 69 and 70, thereby lengthening or shortening the member 17. In view of the irreversible nature of the reduction gear associated with the screw, it is unnecessary to provide additional means for restraining the screw 59 against rotation since it is impossible for the worm gear to drive the worm. Furthermore, the lead of the screw is desirably such that the thrust on the member 17 due to the weight of the bed bottom and occupant will be ineffective to rotate the nut-tube 62, thereby eliminating the need for relocking the crank after each manual operation. It will be understood, however, that before motor-driven operation may be resumed, it will be necessary to again lock the crank in its retracted position in order to prevent rotation of the nut-tube.

To limit the upward swinging movement of the head section, irrespective of whether the bed is being manually or electrically operated, a short angle bracket 76 is mounted on the inside of the head-section supporting-bracket 36 in the path of the downwardly moving portion of the head section 30. A limit switch 77 mounted on the angle bracket 76 is suitably connected in the electrical circuit so as to interrupt power to the motor when the switch is operated. The switch housing is sufficiently sturdy mechanically so that the engagement of the head section with the switch housing is effective to prevent further swinging movement of the head section, in the event of manual operation.

The lower limit of travel of the head section is determined by the engagement of the spreader bar 33 with

resilient pads 78 carried by a shiftable frame 79 pivotally mounted on the sub-frame cross member 23. The shiftable frame carries a switch operator 80 (Figs. 10, 11, and 12) which is effective, upon engagement with the spreader bar 33 when the head section is in horizontal position, to operate a limit switch 81 carried by the cross member 23 to interrupt power to the motor. The frame 79 may be shifted out of the path of the spreader bar in a manner more fully described hereinafter to permit the head section to be depressed to a lower-than-horizontal, or "shock," position.

In Figure 9, there is shown a circuit arrangement which is illustrative of several which might be employed with the motor-actuated bed of the present invention. The particular circuit illustrated is a direct current system including a D. C. motor 60 connected through a normally open double-throw switch 82 and through the aforementioned limit switches 77 and 81 to a suitable source of power. When the double-throw switch 82 is urged in one direction, power is applied to both the armature and field of the motor so as to effect rotation of the shaft in one direction to raise or lower the bed. When the head section engages one or the other of the limit switches, power to field and armature is simultaneously interrupted and can be reestablished only by urging the double-throw switch 82 in the opposite direction, whereupon the rotation of the screw 59 will be reversed and will continue until either the other limit switch is operated or the double-throw switch is released, the motion of the head section being stopped respectively at the opposite limit position or at some intermediate position. Other suitable circuit arrangements may be employed depending upon the nature of the power available and the particular type of motor desired. The double-throw switch 82 is preferably located within reach of the bed occupant, for example, at the side of the bed bottom 15 at the approximate location of the extended hand of the occupant, as illustrated in Figures 1 and 2.

The details of the shiftable frame 79 and lower limit-switch operator 80 are more fully shown in Figures 10, 11 and 12. The frame 79 comprises an inverted U-shaped flat metal bar, the legs of which are pivotally supported upon brackets 83 secured to the sub-frame cross member 23 so as to be shiftable between an upright position (Figure 10) and an inclined position (Figure 11) determined by its engagement with a suitable stop such, for example, as an angle clip 84 (Fig. 12) pivotally supported upon the brackets 83 co-axially with the frame 79. The frame 79 is manually shiftable from its upright to its inclined position and is maintained at either position by a tensioned coil spring 85 connected at one end to the shiftable frame and at its other end to the cross member 23 so as to provide a resilient over-center action. Carried by the shiftable frame 79 and disposed in the downward path of the spreader bar 33 is a switch operator 80 which, in the illustrated ebodiment, takes the form of a plunger which is downwardly depressable against the action of a compression spring 86 encompassing the plunger shaft. The compression spring is retained at its upper end by a head 87 formed on the plunger shaft and at its lower end by its abutment with the shiftable frame 79 through which the plunger extends. Secured to the cross member immediately beneath the plunger is the limit switch 81 and a U-shaped spring leaf 88, the free end of which is interposed between the plunger and the limit switch. It will be apparent that as the head section 30 is lowered to the horizontal position, the spreader bar 33 engages the head of the plunger forcing it downwardly to actuate the limit switch thereby interrupting power to the motor. If it be desired to depress the head section below the horizontal, it is necessary only to shift the frame 79 toward the head end of the bed so as to carry the switch-operator 80 out of the downward path of the spreader bar. With the shiftable frame so displaced, the head section may be further depressed to the "shock" position which is deter-

mined by the direct engagement of the spreader bar with the spring leaf (Fig. 12), whereupon the limit switch is again operated to open the power circuit to the motor.

Since the shock position of the bed bottom is seldom used, it is desirable to provide automatic means for returning the shiftable frame 79 to its upright position as the head section is raised out of the shock position, thereby restoring the limit switch operator 80 to its normal position. This automatic means takes the form of a projection 89 formed by cutting out a portion of the legs of the shiftable frame 79 and extending into the arcuate, downward path of the spreader bar 33 when the frame 79 is in its inclined position, as indicated by the broken lines in Figure 12. As the head section 30 and, hence, the spreader bar 33 travel downwardly, and before the spreader bar engages the spring leaf 88 to interrupt power to the motor, the spreader bar engages the projection 89, tipping the frame 79 upwardly over-the-center, the spring 85 bringing the cutout portion of the frame 79 to bear against the spreader bar 33. Then, as the head section is elevated, the shiftable frame is again forced away from its upright position by the upwardly moving spreader bar, the movement of the U-shaped frame during the upward travel of the head section, however, being insufficient to advance the shiftable frame overcenter. Therefore, when the spreader bar 33 is raised clear of the shiftable frame 79, the frame rebounds to its upright position under the action of the spring 85 and is once more operable to limit the downward travel of the head section at the horizontal position.

Although the invention has been described by reference to the specific embodiment illustrated in the drawings, variations and modifications thereof may be made without departing from the scope of the invention which is set forth in the appended claims.

I claim:

1. In an adjustable bed having a normally stationary supporting frame and a bed bottom frame pivotally mounted on said supporting frame for swinging movement about a horizontal axis; a stop member movably mounted on one of said frames and normally disposed to engage the other of said frames to restrain said bed-bottom frame in a horizontal position, said stop member being manually shiftable to a non-restraining position to permit said bed-bottom frame to be depressed below said horizontal position, and resilient means connected between said stop member and said one frame and actuated by movement of said bed bottom frame downwardly from said horizontal position to restore said stop member to its restraining position when said bed-bottom frame is subsequently raised.

2. In an adjustable bed having a normally stationary sub-frame and a bed bottom including a section pivotally mounted on said sub-frame for swinging movement about a horizontal axis; a shiftable stop member pivoted on said sub-frame and normally disposed to abut said section thereby to restrain said section in a horizontal position, said stop member being shiftable to a non-restraining position to permit said section to be depressed below said horizontal position, an over-center spring for urging said stop member toward either of its positions, said stop member, when disposed in said non-restraining position, having a portion engageable by said section when said section is moved below said horizontal position thereby to shift said spring over center to urge said stop member toward its restraining position, and said spring being effective to restore said stop member to its restraining position when said section is subsequently raised.

3. In a adjustable bed having a normally stationary supporting frame, a bed bottom frame pivotally mounted on said supporting frame for swinging movement about a horizontal axis, actuating means for shifting said section, an electric motor for driving said actuating means, and an electrical circuit for connecting said motor to a source of power including a disconnect switch on one of said frames and engageable by the other of said frames for interrupting said circuit when said bed bottom frame is inclined downwardly from the horizontal; a switch operator movably mounted on one of said frames and normally interposed between said switch and other of said frames and engageable by the latter to operate said switch when said bed bottom frame is in a horizontal position thereby to interrupt said circuit, said operator being manually shiftable to an inoperative position to permit said bed bottom frame to be depressed below said horizontal position, and resilient means actuated by movement of said bed bottom frame downwardly from said horizontal position to restore said operator to said normal position when said bed bottom frame is subsequently raised.

4. In an adjustable bed having a normally stationary sub-frame, a bed bottom section pivotally mounted on said sub-frame for swinging movement about a horizontal axis, actuating means for shifting said section, an electric motor for driving said actuating means, and an electrical circuit for connecting said motor to a source of power including a disconnect switch on said sub-frame for interrupting said circuit; the combination of a shiftable switch operator pivotally mounted on said sub-frame and normally interposed between said section and said switch and adapted to be engaged by said section to operate said switch to interrupt said circuit when said section is horizontally disposed, said operator being shiftable to a non-operative position to permit said section to be depressed to a lower-than-horizontal, inclined position, said section being adapted to engage said switch to interrupt said circuit when said section reaches said lower position, and resilient means actuated by movement of said section downwardly from said horizontal position to restore said operator to its operative position when said section is subsequently raised.

5. In an adjustable bed having a normally stationary sub-frame, a bed bottom section pivotally mounted on said sub-frame for swinging movement about a horizontal axis, actuating means for shifting said section, an electric motor for driving said actuating means, and an electrical circuit for connecting said motor to a source of power including a disconnect switch on said sub-frame for interrupting said circuit; the combination of a shiftable switch operator pivotally mounted on said sub-frame and normally interposed between said section and said switch and adapted to be engaged by said section to operate said switch to interrupt said circuit when said section is horizontally disposed, said operator being shiftable to a non-operative position to permit said section to be depressed to a lower-than-horizontal, inclined position, said section being adapted to engage said switch to interrupt said circuit when said section reaches said lower position, an over-center spring for urging said operator toward either of its positions, said operator in said non-operative position having a portion engageable by said section when said section is moved below said horizontal position to shift said operator over-center toward its operative position whereby said operator is restored to said operative position when said section is subsequently raised.

6. An adjustable bed comprising a normally stationary sub-frame, a bed bottom including a foot section and an adjacent section hingedly connected to said foot section, means movably supporting said adjacent section upon said sub-frame for shifting movement longitudinally of said sub-frame, support means for said foot section including an upwardly-extending link pivotally connected at its lower end to said sub-frame and a draw bar connecting said adjacent section and said link, said foot section normally resting on the upper end of said link, said drawbar having formed thereon an abutment, a pawl pivotally suspended from said foot section and adapted to engage said abutment to support said foot section independently of said upper link-end, and a cam

on said sub-frame engageable with said pawl for disengaging said pawl from said abutment when said adjacent section is shifted in one direction longitudinally of said sub-frame.

7. In an adjustable bed having a normally stationary supporting frame and a bed bottom frame pivotally mounted on said supporting frame for swinging movement about a horizontal axis; a stop member movably mounted on one of said frames and normally disposed to engage the other of said frames to restrain said bed bottom frame in a predetermined position relative to said supporting frame, said stop member being manually shiftable to a non-restraining position to permit said bed bottom frame to be depressed below said predetermined position, and resilient means actuated by movement of said bed bottom frame below said predetermined position for restoring said stop member to its restraining position when said bed bottom frame is subsequently raised.

8. In an adjustable bed having a normally stationary supporting frame and a bed bottom frame pivotally mounted on said supporting frame for swinging movement about a horizontal axis; a stop member movably mounted on one of said frames and normally disposed to engage the other of said frames to restrain said bed bottom frame in a predetermined position relative to said supporting frame, said stop member being manually

shiftable to a non-restraining position to permit said bed bottom frame to be depressed below said predetermined position, and means actuated by movement of said bed bottom frame below said predetermined position for restoring said stop member to its restraining position when said bed bottom frame is subsequently raised.

References Cited in the file of this patent

UNITED STATES PATENTS

1,658,777	Nixon	Feb. 7, 1928
1,790,435	Muller	Jan. 27, 1931
2,215,636	Comper	Sept. 24, 1940
2,255,706	Height	Sept. 9, 1941
2,284,404	Martin	May 26, 1942
2,337,284	Urie	Dec. 21, 1943
2,349,701	Buttikofer	May 23, 1944
2,481,477	Peery	Sept. 6, 1949
2,500,742	Taylor	Mar. 14, 1950
2,560,465	McVicker et al.	July 10, 1951
2,617,117	Putterbaugh	Nov. 11, 1952

FOREIGN PATENTS

201,576	Switzerland	Feb. 16, 1939
444,451	Great Britain	Mar. 20, 1936
456,052	Germany	Feb. 16, 1928