Aug. 18, 1925. 1,549,944

M. C. WILKINSON

FLOATING BEAM PUMP

Filed Nov. 7, 1921

Fig. 3

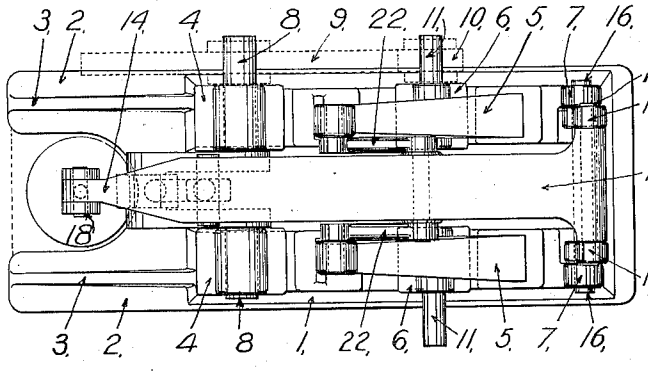

Fig. 4

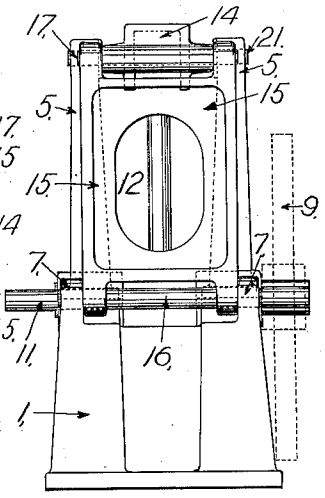

Fig. 1

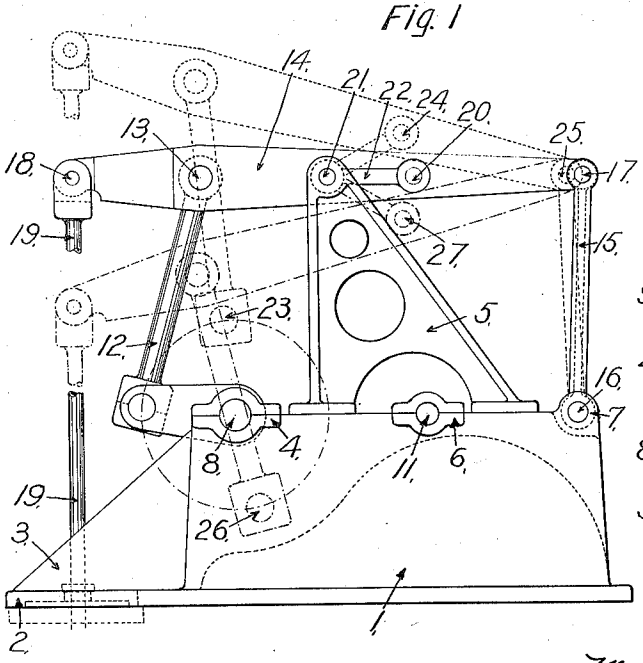

Fig. 2

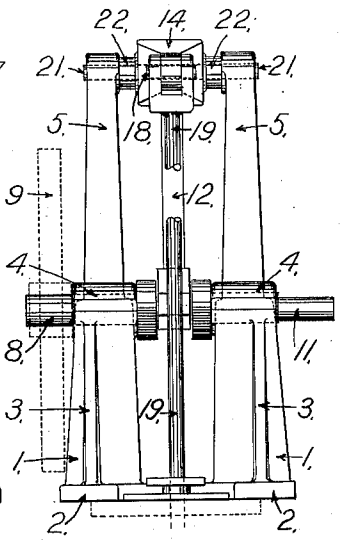

Melville C. Wilkinson,
Inventor.

Patented Aug. 18, 1925. 1,549,944

UNITED STATES PATENT OFFICE.

MELVILLE C. WILKINSON, OF LOS ANGELES, CALIFORNIA.

FLOATING-BEAM PUMP.

Application filed November 7, 1921. Serial No. 513,422.

To all whom it may concern:

Be it known that I, MELVILLE C. WILKINSON, a citizen of the United States, residing at Los Angeles, in the county of Los Angeles and State of California, have invented a new and useful Floating-Beam Pump, of which the following is a specification.

My invention relates to improvements in deep well pumps, in which circular motion is changed into linear motion, and the objects of my improvement are, first, to eliminate the ordinary forms of crossheads, second, to eliminate the large areas of sliding contact and attendant lubrication now necessary with that mechanism, third, to resolve circular motion into linear motion without the use of guides.

I attain these objects by the mechanism illustrated in the accompanying drawings in which—

Fig. 1 is a side elevation of the mechanism;

Fig. 2 is a front view of the same;

Fig. 3 is a top view of the same and

Fig. 4 is a rear view of the same.

Similar numerals refer to the same parts throughout the several views.

The base 1 is of rectangular form having a groove recessed down the center of the top to provide clearance space for the swing of the crank and other parts; at the front a slotted bracket or shelf 2 extends outwardly from its lower edge to which is attached the T of the well pipe (the top flange of which is indicated in dotted lines in Figs. 1 and 2). The bracket is supported by the webs 3; at the top of the base, near the front edge thereof, are located the main shaft bearings 4; on top of the base and in rear of these main bearings are attached the front legs of two brackets 5, the rear legs of these brackets being attached to the top of the base in rear of the counter shaft bearings 6. On top of the base and at the two rear corners thereof are the lugs 7.

Carried in the main bearings 4 is the main shaft 8, said shaft has a crank located in the center thereof and a spur gear 9 (shown in dotted lines in Fig's 2, 3 and 4) on one end; into the gear 9 is meshed a pinion 10 (shown in dotted lines in Fig. 3) located on the countershaft 11 which is carried in the bearings 6, the end of the countershaft 11 opposite the pinion extends beyond the side of the base to receive power for operating the pump.

A pitman 12, with bearing boxes at each end thereof, at one end is attached to and embraces the crank pin of the main shaft crank, and the other end is attached to and embraces the wrist pin 13 in the floating beam 14.

A rocker arm 15 is attached hingewise to the lugs 7 by a shaft 16 passing through the lugs 7 and the lugs on the lower end of the rocker arm; the upper end of the rocker arm is attached hingewise to the floating beam 14 by a shaft 17 passing through lugs on the rocker arm and a hole through the floating beam, thus forming a swinging fulcrum for the floating beam.

Through the front end of the floating beam a hole is drilled through which passes a pin 18, this pin also passes through holes in the two lugs connected to the upper end of the pump plunger rod 19 thereby attaching hingewise the pump rod to the floating beam.

The floating beam 14 is movably attached to the two brackets 5 by the two links 22. These links are attached to the floating beam by the pin 20 passing through the floating beam and extending through the bearings in one end of the links and by the pins 21 projecting inwardly from the upper ends of the brackets 5 and passing through the bearings in the other end of the links.

The center lines of the pins and shaft 18, 21, 20 and 17 are all in the same plane and parallel to each other when the floating beam is at the center of its stroke, also the direction of the center lines of these pins and of pin 13 are perpendicular to a plane passing through the center lines of the floating beam and pump plunger rod.

The following approximate distances between pivots of the various members have been found to give satisfactory results.

Distance between pivots 17 and 18 of floating beam, three times length of pump stroke.

Distance between pivots 17 and 20 of floating beam, length of pump stroke.

Distance between pivots 20 and 21 of links 22, one-half length of pump stroke.

Distance between pivots 17 and 21 when floating beam is at the center of the stroke, one and one-half times length of stroke.

Length between pivots 16 and 17 of rocker arm immaterial provided the arcal swing of pivot 17 does not vary materially from a straight line.

The movement of the pump members is as follows,—

When the main shaft and crank are turned to a position where the crank pin occupies the position of the dotted circle 23 Fig. 1 the floating beam 14 will have been carried to its upper position as shown in dotted lines, the links 22 will have caused the pin 20 to move to the position of the dotted circle 24 and the floating beam 14 to a position in which the shaft 17 will be in the position of the dotted circle 25. The rocker arm 15 will have swung on the shaft 16 to the position shown in dotted lines for that member. When the main shaft and crank are further rotated so that the crank pin occupies the position shown by the dash and dot circle 26 the floating beam 14 will have passed through its former position shown in solid lines and assume its lower position as shown by the dash and dot lines, the pin 17 will again have moved to the position as shown by the dotted circle 25 and the rocker arm 15 will again assume the position shown in dotted lines for that member.

During all these movements of the floating beam the center point of the pin 18 will have traveled in a practically straight line, which straight line coincides with the center line of the pump plunger rod 19; a continued rotation of the main shaft therefore causes the pump plunger rod to reciprocate lengthwise of its center line without the use of crosshead or sliding guides.

It is believed that the operation of the pump will be fully understood from the above description.

What I claim is:

In a pump mechanism, a pump base having oppositely disposed side walls spaced apart, a bearing disposed on the upper edge of each of said side walls and being oppositely disposed, a movable rocker arm secured to the upper edge of the side walls of said base and at one end thereof, the upper end of said rocker arm being pivotally secured to one end of a floating beam, a floating beam, links pivotally secured to the floating beam and to the upper end of the bearings, a crank shaft a pitman, one end of said pitman being pivotally secured to the floating beam intermediate the width of said beam, the other end of said pitman being pivotally connected to said crank shaft, the free ends of said crank shaft being pivotally secured to bearings formed on the upper edge of the side walls of said base, and a pump plunger rod pivotally secured to the end of said floating beam.

MELVILLE C. WILKINSON.