June 6, 1967 J. V. KNAB 3,323,437

FILTER SYSTEM

Filed Aug. 20, 1965 2 Sheets-Sheet 1

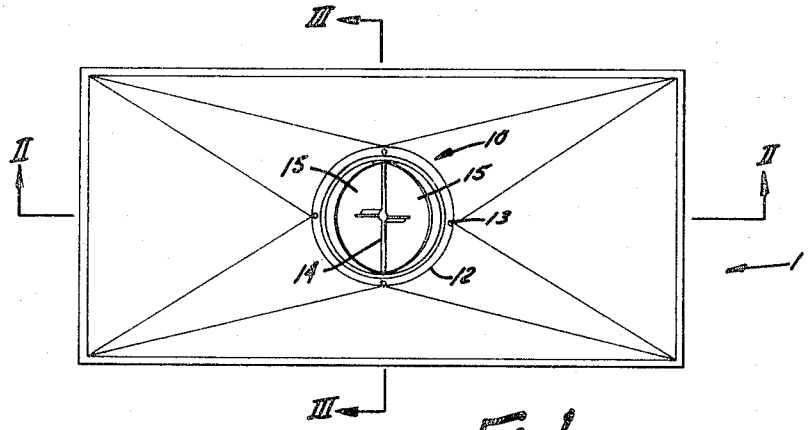

FIG. 1

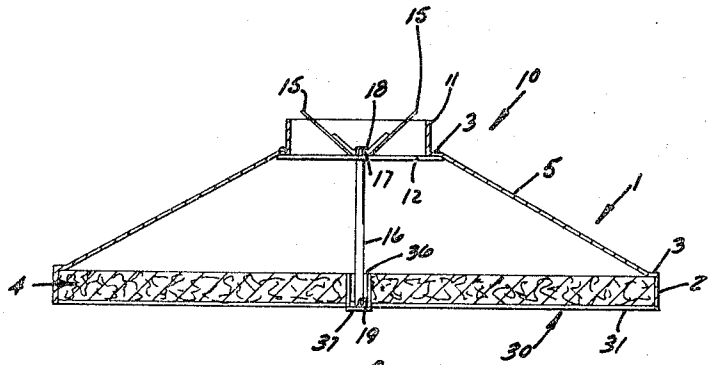

FIG. 2

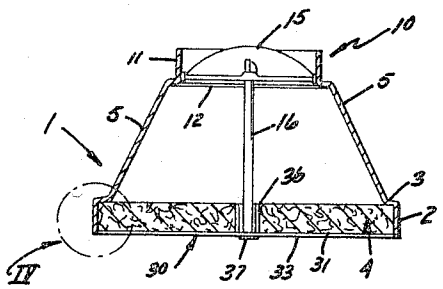

FIG. 3

INVENTOR.
JAMES V. KNAB

BY Price & Heneveld

ATTORNEYS

June 6, 1967 J. V. KNAB 3,323,437

FILTER SYSTEM

Filed Aug. 20, 1965 2 Sheets-Sheet 2

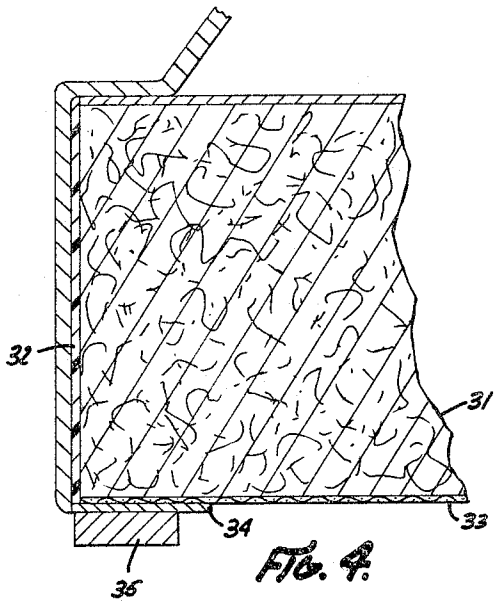

FIG. 4.

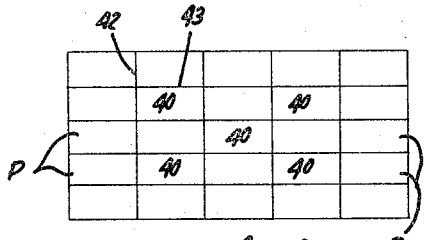

FIG. 6.

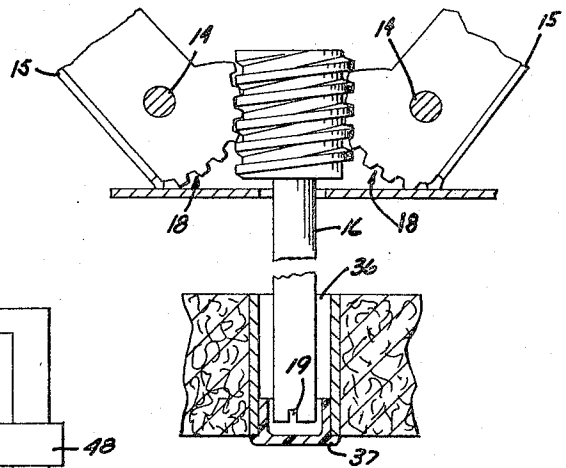

FIG. 7.

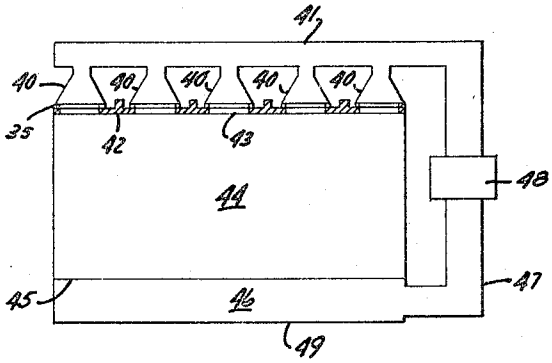

FIG. 5

INVENTOR.
JAMES V. KNAB
BY Price & Heneveld
ATTORNEYS

United States Patent Office 3,323,437 Patented June 6, 1967

3,323,437

FILTER SYSTEM

James V. Knab, Grand Rapids, Mich., assignor to Weber Showcase & Fixture Co., Grand Rapids, Mich., a corporation of New York

Filed Aug. 20, 1965, Ser. No. 481,249
11 Claims. (Cl. 98—40)

This invention relates to plenum units for clean rooms, and more specifically to self-contained, relatively small plenum units which may be cascaded to form a clean room of any desired dimensions.

Modern electronic manufacturing techniques often require that critical components be assembled and packaged inside what has come to be known as a clean room. Basically, these rooms are merely enclosures within which temperature, humidity and dust conditions are maintained at desired levels. They usually comprise some system for constantly recirculating and filtering the air contained in the clean room to insure that it is kept free from minute dust particles.

It is customary in the art of clean room construction to provide a single plenum of sufficient dimensions to cover the entire ceiling or the entire wall of the clean room. This mode of construction has not been found completely satisfactory for several reasons. The tolerances for construction of a plenum are in micron measurements to insure that it will be airtight. As contemporary plenums become larger, the normal expansion and contraction due to outside changes in temperature and humidity often defeat the desire for absolutely tight construction. Another drawback to the present method of constructing clean rooms is that the entire, self-contained room must be constructed initially. This necessitates either the provision of a plenum large enough to enclose clean room space sufficient for future expansion, or the complete, later, construction of another clean room. Either of these alternatives is very expensive.

In clean rooms currently in use, there is no means whereby the air flow at an individual section of the clean rooms can be controlled. Since it is often desirable to maintain the air velocity above one work table at a relatively small level, systems now in use require that the air velocity in the entire clean room be retarded.

The current mode of construction of clean rooms requires architects and engineers who are specialists in the clean room field. Ordinary construction techniques and workmanship are not sufficient because of the small acceptable tolerances involved.

It is an object of this invention to provide a mode of clean room construction which is not subject to the difficulties and drawbacks outlined above. More specifically, it is an object of this invention to provide a plenum unit of standard shape and size which may, if desired, be cascaded with like plenum units to form a clean room ceiling or wall of any desired shape and size.

It is an object of this invention to provide a plenum unit which is capable of being cascaded with already existing groups of plenum units so that a previously constructed clean room may be enlarged.

It is an object of this invention to provide a standard size plenum unit having means whereby the air velocity therethrough may be controlled, and thereby provide a means whereby, in a clean room composed of a plurality of such plenum units, individual work areas may be velocity regulated.

It is an object of this invention to provide a mode of clean room construction which is sufficiently simple to be executed by architects and engineers utilizing ordinary construction techniques and workmanship.

It is an object of this invention to provide a mode of

clean room construction which is less expensive than that previously utilized.

These and other objects of this invention will be completely understood by reference to the following specification and figures in which:

FIG. 1 is a plan view of the plenum unit which is the subject of this invention;

FIG. 2 is a cross-sectional view taken along line II in FIG. 1;

FIG. 3 is a cross-sectional view taken along line III in FIG. 1;

FIG. 4 is an enlarged view of the area indicated by circle IV of FIG. 3;

FIG. 5 shows a clean room, partially in cross-section, which has been constructed utilizing the teachings of this invention;

FIG. 6 is a schematic view of a ceiling of a room showing an exemplary manner of mounting the plenum units of this invention therein; and

FIG. 7 is an exploded cross-sectional view showing the damper pivot gear.

Briefly, the objects of this invention are accomplished by providing a plenum unit having a filter receptacle, a stack positioned above the filter receptacle, an airtight envelope extending from the entire periphery of the filter receptacle to the entire periphery of the stack, a means for controlling the volume of air which may be passed through the stack, and a filter disposed in the filter receptacle. The plenum unit may be manufactured before it is shipped to the construction site. The desired number of plenum units may then be fitted together to form one surface of the clean room to be constructed.

Referring now to the figures a preferred embodiment of this invention will be discussed in detail. FIGS. 1, 2, 3, 4 and 7 illustrate the details of the plenum. The housing **1** comprises a vertical base **2** with a horizontal ledge **3** extending therefrom. These two members form a filter receptacle indicated generally at **4**. Extending from the entire periphery of the filter receptacle are frusto-converging housing segments **5**. These segments converge at the bi-valve damper assembly indicated generally at **10**. Obviously, the envelope formed by the frusto-converging housing segment **5** could be attached directly to the vertical base **2** without departing from the spirit of this invention.

The upper portion of the envelope is affixed to a stack **11** as shown. This connection, as well as that to the filter receptacle, must be airtight. Preferably, the entire housing including members **2**, **3**, **5** and **10** is formed as one piece. White fiber glass is one material that has been found suitable for this purpose.

The bi-valve damper assembly has a circular valve supporting member **12** affixed to the lower portion of stack **11** by suitable fastening means **13**. A valve pivot **14** extends across the circular valve supporting member **12** in diametrical fashion. Pivotably attached to the valve pivot **14** are two semi-circular valves **15**. Each of these valves are provided with a pivot gear **18** positioned as shown best in FIG. 2. A bi-valve adjustment shaft **16** having a worm gear extremity **17** is operatively mounted with respect to the pivot gear **18** as is well known in the art. The bi-valve adjustment shaft **16** extends into the envelope and terminates with an adjustment slot **19** at a point just short of the plane formed by the lower edges of vertical base **2**.

The filter assembly, indicated generally at **30**, comprises a filter **31** which is preferably permanently sealed into filter receptacle **4** by means of a suitable sealant such as silicone construction cement. The filter **31** should have particle efficiencies better than 99.97 percent for 0.3 micron diameter particles as determined by standard chemical core dioctyl phthalate tests. As viewed best in

FIG. 4, filter **31** is additionally secured by means of a grill work **33** which is secured to the filter receptacle by means of securing strips **34**. Grill **33** may, for example, be a No. 0.081 anodized aluminum flattened expanded grill and the strips **34** may be one inch wide by 0.062 inch thick anodized aluminum.

A vertical sleeve **36** is provided through filter **31**. This sleeve is so positioned that the bi-valve adjustment shaft **16** passes therethrough and extends approximate the outer surface of the filter. A sealing cap **37** is provided for plugging the sleeve **36** after the desired damper assembly adjustments have been executed. Peripherally disposed about the inner surface of the housing is a sealing gasket **35**. Conveniently, this gasket may be affixed to securing strips **34**. The gasket may, for example, be of polyurethane material.

Referring now to FIG. 5, a clean room utilizing the plenum unit which is the subject of this invention will be described. While FIG. 5 shows the plenum units positioned in the ceiling, it is to be understood that they might also be positioned in the wall. This modification, of course, would also necessitate moving the collection chamber to the opposite wall. The ceiling is formed initially from a plurality of mutually perpendicular supporting members **42** and **43**. Conveniently, these supporting members may be inverted T-beams. They are positioned such that a plurality of rectangular openings are formed in the ceiling having dimensions somewhat less than the dimensions of the plenum units to be utilized. Where an inverted T-beam is utilized, it is desirable that the edges of the plenum unit closely approach the legs of the T-beam on all four sides of the opening. Members **42** and **43** are so positioned that the frame formed by the T-beam cross-members is planar. It will be noted, that when the plenum unit **40** is placed within the rectangular frame formed by mutually perpendicular support members **43** and **43**, sealing gasket **35** lies between the support member and the periphery of the plenum unit. The presence of this gasket is sufficient protection against dust leakage because of the direction of air flow as will be described. A plenum unit **40** is positioned within each rectangular frame. While FIG. 5 does not illustrate the details of these plenum units, it is to be understood that they are preferably identical to those described in connection with FIGS. 1–4.

A supply duct **41** connects the stacks of the plenum units **40**. It has been found that one supply duct may be utilized for each two rows of plenum units. The room **44** is provided with a false floor **45** through which the air exits. Conveniently, the space between false floor **45** and the floor **49** may form a collection chamber **46**. The air leaves the collection chamber **46** via return duct **47** and passes into compressor unit **48**. The compressor unit **48** preferably includes some form of pre-filtering unit and also means for exhausting stale air and intaking and conditioning fresh air to replace it. The air is forced from compressor unit **48** into supply duct **41**.

The plenum units which are the subject of this invention are preferably constructed with dimensions such that they may be easily handled and also cascaded to form a clean room of the desired size. Suitable dimensions are, for example, on the order of two feet by four feet.

In operation, air is fed from compressor **48** into supply duct **41**. The air passes into the individual plenum via the bi-valve assemblies which are adjusted to achieve the correct volumes and velocities. The air exits from the plenum unit by passing through the filters **31**. It flows in laminar fashion through the clean room, through false floor **45**, and passes into collection chamber **46**. It is then returned to the compressor unit and the process is repeated.

The plenum units of this invention may also be utilized in rooms which do not require a high degree of cleanliness by spacing the plenum units further apart in the ceiling or wall. A schematic showing of such a situation is illustrated in FIG. 6 which shows a ceiling **6** with intersecting beams **42** and **43**. In such a case, many rectangular supports are sealed by some type of wall panel.

Certain of the supports only would include a plenum unit, as shown by the reference numeral **40**. If it were later desired to improve the cleanliness of the room, it would merely be necessary to remove these alternate wall or ceiling panels and replace them with plenum units.

Thus it may be seen that this invention has provided a means whereby clean rooms may be constructed at a minimum initial cost while still preserving maximum opportunities for later expansion. Since the critical components come in pre-assembled form, a means is also provided whereby a satisfactory clean room may be assembled utilizing ordinary construction techniques and workmanship. The overall results of these, and previously discussed advantages, is to increase the clean room efficiency while substantially reducing its cost of construction.

While several preferred embodiments of this invention have been described together with minor modifications, it will be recognized that other modifications may be made without departing from the scope and spirit of the invention. Such modifications are to be deemed as included within the scope of the following claims unless these claims, by their language, expressly state otherwise.

I claim:

1. A plenum unit particularly adapted for utilization in clean rooms suitable for specialized electronic production, medical surgery and the like, said unit comprising:
- a filter receptacle;
- a stack positioned above said filter receptacle;
- a frusto-converging airtight envelope extending from the entire periphery of said filter receptacle to the entire periphery of said stack to form a generally smooth diverging air passageway from said stack to said receptacle;
- means for affixing said envelope to said filter receptacle and said stack;
- means for controlling the volume of air which may be passed through said stack; and
- a filter disposed in said filter receptacle, said filter being of sufficient size to completely fill said filter receptacle and having at least a 75 percent efficiency for 0.3 micron particles as determined by the standard chemical core D.O.P. test.

2. The apparatus as set forth in claim **1** in which said means for controlling comprises:
- a bi-valve damper pivotally mounted in said stack;
- an aperture in said filter; and
- a control shaft extending from said damper to said aperture.

3. The apparatus as set forth in claim **2** which further comprises:
- a grill covering the exposed surface of said filter; and
- means for affixing said grill to said filter receptacle.

4. The apparatus as set forth in claim **1** which further comprises:
- a peripheral sealing gasket positioned along the entire periphery of said filter receptacle at the room surface thereof.

5. A clean room, particularly adapted for specialized electronic production, medical surgery and the like, said room comprising:
- a first surface thereof having a plurality of plenum units abutting it, each of said plenum units including a filter receptacle, a stack spaced from said receptacle, a frusto-converging airtight envelope extending from the entire periphery of said filter receptacle to the entire periphery of said stack to form a generally smooth diverging air passageway from said stack to said receptacle and being secured to each of said filter receptacle and said stack, and a filter in said receptacle exposed to the room, said filter having at least a 75 percent efficiency for 0.3 micron particles as determined by the standard chemical core D.O.P. test;

a second surface of a construction enabling air to exit therethrough;

ducts inter-connecting said second surface and said stacks of said plenum units; and

means for exiting air from the room through said second surface in generally laminar fashion, through said ducts and through said filters in said plenum units and thereby back into said room.

6. A clean room as defined in claim **5**, said first surface comprising a gridwork in the ceiling, said plenum units resting on at least certain of the gridwork.

7. A clean room as defined in claim **6**, each plenum unit including a sealing gasket positioned between its bottom and resting against said gridwork.

8. A clean room as defined in claim **6**, each of said plenum units having a means for controlling the volume of air which may be passed through said stack.

9. A clean room as defined in claim **8**, said means for controlling comprising a damper movably mounted in said stack, an aperture in said filter, and a control shaft extending from said damper to said aperture.

10. A clean room, comprising: a ceiling formed by a gridwork of rectangular openings having inwardly extending flanges, a plurality of plenum units positioned within said rectangular openings and resting on the inwardly extending flanges thereof, each said plenum unit including a rectangular filter receptacle of sufficient dimensions to overlap said inwardly extending flanges about the entire periphery of said opening, a peripheral sealing gasket positioned petween the overlapping portion of said receptacle and said inwardly extending flanges, a stack positioned away from said receptacle on the side opposite said gridwork, an airtight envelope extending from the entire periphery of said filter receptacle to the entire periphery of said stack, means for affixing said envelope

to said filter receptacle and said stack, and a filter disposed in said filter receptacle, said filter being of sufficient size to completely fill said receptacle and having at least a 75 percent efficiency for 0.3 micron particles as determined by the standard chemical core D.O.P. test; an elevated floor of construction enabling air to exit therethrough, said air passing downwardly from said filter and contacting only the personnel and equipment disposed within said room prior to exiting through said floor; ducts interconnecting the space below said elevated floor and said stacks of said plenum units; and means for circulating air from the room through said floor, through said ducts and through said filters in said plenum units and thereby back into said room.

11. A clean room as defined in claim which further comprises, means for controlling the volume of air which may be passed through said stack, said means comprising a damper movably mounted in said stack, an aperture in said filter, and a control shaft extending from said damper to said aperture.

References Cited

UNITED STATES PATENTS

2,251,663	8/1941	Darbo	98—40
2,775,927	1/1957	Wulle	98—40
3,001,464	9/1961	Moore	98—40
3,010,381	11/1961	Glass	98—41
3,252,400	5/1966	Madl	98—115 X

ROBERT A. O'LEARY, *Primary Examiner.*

MEYER PERLIN, *Examiner.*

W. E. WAYNER, *Assistant Examiner.*

UNITED STATES PATENT OFFICE

CERTIFICATE OF CORRECTION

Patent No. 3,323,437 June 6, 1967

James V. Knab

It is hereby certified that error appears in the above numbered patent requiring correction and that the said Letters Patent should read as corrected below.

Column 6, line 15, for "claim" read -- claim 10 --.

Signed and sealed this 5th day of November 1968.

(SEAL)
Attest:

Edward M. Fletcher, Jr.
Attesting Officer

EDWARD J. BRENNER
Commissioner of Patents