Office de la Propriété Intellectuelle du Canada
Un organisme d'Industrie Canada

Canadian Intellectual Property Office
An agency of Industry Canada

CA 2675351 C 2015/05/19

(11)(21) **2 675 351**

(12) **BREVET CANADIEN**
CANADIAN PATENT

(13) **C**

(22) **Date de dépôt/Filing Date:** 2009/08/12

(41) **Mise à la disp. pub./Open to Public Insp.:** 2010/04/08

(45) **Date de délivrance/Issue Date:** 2015/05/19

(30) **Priorité/Priority:** 2008/10/08 (US61/103,782)

(51) **Cl.Int./Int.Cl.** ***H04W 4/00*** (2009.01),
H04W 8/18 (2009.01)

(72) **Inventeurs/Inventors:**
CHEN, XIANFENG, CA;
STOEV, ORLIN VESSELINOV, CA

(73) **Propriétaire/Owner:**
RESEARCH IN MOTION LIMITED, CA

(74) **Agent:** RIDOUT & MAYBEE LLP

(54) **Titre : SERVEUR DE FONCTIONNALITES NOUVELLES D'APPLICATIONS, POUR DISPOSITIFS DE COMMUNICATIONS SANS FIL, ET METHODES CONNEXES**

(54) **Title: SERVER FOR SENDING NEW APPLICATION PORTIONS TO MOBILE WIRELESS COMMUNICATIONS DEVICES AND RELATED METHODS**

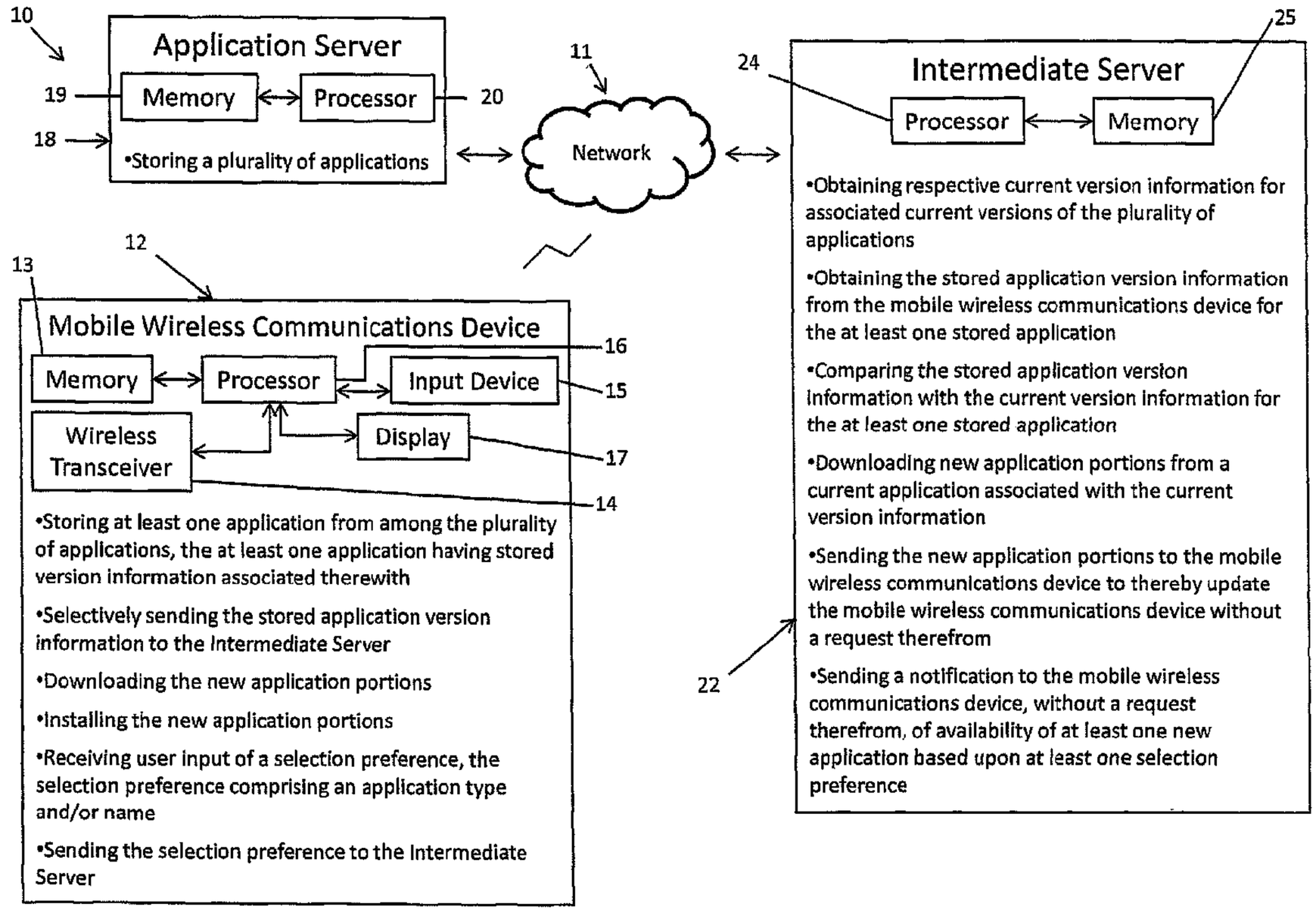

(57) **Abrégé/Abstract:**
A communications system is to communicate with an application server storing a plurality of applications. The communications system includes a mobile wireless communications device configured to store at least one application from among the plurality of

CA 2675351 C 2015/05/19

(11)(21) **2 675 351**

(13) **C**

(57) **Abrégé(suite)/Abstract(continued):**
applications, the at least one application having stored version information associated therewith. An intermediate server is configured to update the mobile wireless communications device by at least obtaining respective current version information for associated current versions of the plurality of applications and obtaining the stored application version information from the mobile wireless communications device for the at least one stored application. The stored application version information is compared with the current version information for the at least one stored application. New application portions are downloaded from a current application associated with the current version information, and the new application portions are sent to the mobile wireless communications device.

SERVER FOR SENDING NEW APPLICATION PORTIONS TO MOBILE WIRELESS COMMUNICATIONS DEVICES AND RELATED METHODS

Abstract of the Disclosure

A communications system is to communicate with an application server storing a plurality of applications. The communications system includes a mobile wireless communications device configured to store at least one application from among the plurality of applications, the at least one application having stored version information associated therewith. An intermediate server is configured to update the mobile wireless communications device by at least obtaining respective current version information for associated current versions of the plurality of applications and obtaining the stored application version information from the mobile wireless communications device for the at least one stored application. The stored application version information is compared with the current version information for the at least one stored application. New application portions are downloaded from a current application associated with the current version information, and the new application portions are sent to the mobile wireless communications device.

SERVER FOR SENDING NEW APPLICATION PORTIONS TO MOBILE WIRELESS COMMUNICATIONS DEVICES AND RELATED METHODS

Related Application

[0001] This application is based upon prior filed copending provisional application Serial No. 61/103,782 filed October 8, 2008.

Technical Field

[0002] The present disclosure relates to the field of communications systems, and, more particularly, to mobile wireless communications systems and related methods.

Background

[0003] Cellular communications systems continue to grow in popularity and have become an integral part of both personal and business communications. Cellular telephones allow users to place and receive voice calls most anywhere they travel. Moreover, as cellular telephone technology has increased, so too has the functionality of cellular devices and the different types of devices available to users. For example, many cellular devices now incorporate personal digital assistant (PDA) features such as calendars, address books, task lists, etc. Moreover, such multi-function or "smart" devices may also allow users to wirelessly send and receive electronic mail (email) messages and access the Internet via a cellular network and/or a wireless local area network (WLAN), for example.

[0004] Mobile devices such as smart phones are also capable of running relatively sophisticated applications,

such as games, document processing applications, chat or instant messaging applications, etc. As a result, it may be desirable to provide enhanced approaches for accessing and managing applications and upgrades thereto for mobile devices, especially as new applications and new versions of existing applications continue to be developed and become available.

Brief Description of the Drawings

[0005] FIG. 1 is a schematic block diagram of a communications system in accordance with the present disclosure.

[0006] FIG. 2A is a schematic diagram illustrating an application stored on the mobile wireless communications device (of FIG. 1) compared with a current version of that application stored on an application server (of FIG. 1).

[0007] FIG. 2B is a schematic diagram illustrating the application stored on the mobile wireless communications device (of FIG. 1) as updated with the new portions shown in FIG. 2A.

[0008] FIG. 3A is a schematic diagram illustrating an application stored on the mobile wireless communications device (of FIG. 1) compared with a current version of that application stored on an application server (of FIG. 1).

[0009] FIG. 3B is a schematic diagram illustrating the application stored on the mobile wireless communications device (of FIG. 1) as updated with the new portions shown in FIG. 3A.

[0010] FIG. 4 is a front view of the mobile wireless communications device of FIG. 1 receiving an input of application selection preferences.

[0011] FIG. 5 is a front view of the mobile wireless communications device of FIG. 1 displaying a notification of availability of new applications based upon the selection preferences.

[0012] FIG. 6 is a flow chart illustrating a method of operating the communications system of FIG. 1.

[0013] FIG. 7 is a schematic block diagram of an alternative embodiment communications system in accordance with the present disclosure.

[0014] FIG. 8 is a schematic block diagram illustrating exemplary components of a mobile wireless communications device that may be used with the communications system disclosed in FIG. 1.

Detailed Description

[0015] The present description is made with reference to the accompanying drawings, in which various embodiments are shown. However, many different embodiments may be used, and thus the description should not be construed as limited to the embodiments set forth herein. Rather, these embodiments are provided so that this disclosure will be thorough and complete. Like numbers refer to like elements throughout.

[0016] Generally speaking, a communications system is to communicate with an application server storing a plurality of applications and may comprise at least one mobile wireless communications device configured to store at least one application from among the plurality of applications. The at least one application may have stored version information associated therewith. An intermediate server may be configured to update the at least one mobile wireless communications device by at least obtaining respective current version information for associated

current versions of the plurality of applications, and obtaining the stored application version information from the at least one mobile wireless communications device for the at least one stored application. The intermediate server may also be configured to obtain the respective current version information from the application server.

[0017] In addition, the intermediate server may compare the stored application version information with the current version information for the at least one stored application and may download new application portions from a current application associated with the current version information. The new application portions may be sent to the at least one mobile wireless communications device.

[0018] Further, the intermediate server may update the at least one mobile wireless device without a request therefrom. The intermediate server may also send a notification to the at least one mobile wireless communications device of availability of at least one new application based upon at least one selection preference. Moreover, the intermediate server may send the notification without a request from the at least one mobile wireless communications device. The at least one selection preference may comprise at least one of an application type and an application name.

[0019] Also, the at least one mobile wireless communications device may selectively permit the intermediate server to obtain the stored version information. The at least one mobile wireless communications device may install the new application portions based upon no user input. Alternatively, the at least one mobile wireless communications device may install the new application portions based upon user input. The at

least one mobile communications device may comprise a processor and a memory cooperating therewith and the intermediate server may also comprise a processor and a memory cooperating therewith.

[0020] Another aspect is directed to a communications system comprising an application server comprising an application module for storing a plurality of applications. The communications system may include at least one mobile wireless communications device configured to store at least one application from among the plurality of applications, the at least one application having stored version information associated therewith. The application server may further comprise an intermediate module configured to update the at least one mobile wireless communications device by at least obtaining respective current version information from the application module for associated current versions of the plurality of applications, and obtaining the stored application version information from the at least one mobile wireless communications device for the at least one stored application. The intermediate module may also compare the stored application version information with the current version information for the at least one stored application and download new application portions from a current application associated with the current version information. Further, the intermediate module may send the new application portions to the at least one mobile wireless communications device.

[0021] A method aspect is directed to a method of operating an intermediate server for communicating with an application server storing a plurality of applications for updating a mobile wireless communications device storing at least one application from among the plurality of

applications, the at least one application having stored version information associated therewith. The method may include obtaining respective current version information for associated current versions of the plurality of applications. The respective current version information may be obtained from the application server. Furthermore, the stored application version information may be obtained from the at least one mobile wireless communications device for the at least one stored application. The stored application version information may be compared with the current version information for the at least one stored application. New application portions may be downloaded from a current application associated with the current version information. The new application portions may be sent to the at least one mobile wireless communications device.

[0022] With reference to FIG. 1, a communications system **10** including a mobile wireless communications device **12** according to the present disclosure is now described. Although the communications system **10** is described with reference to one mobile wireless communications device **12**, it should be readily understood that there may be any number of mobile wireless communications devices belonging to the communications system.

[0023] The communications system **10** includes an application server **18** which comprises a processor **20** and a memory **19** cooperating therewith for storing a plurality of applications. The plurality of applications may include any applications for the mobile wireless communications device **12**, for example games, or map applications.

[0024] The mobile wireless communications device **12** comprises a processor **16** coupled to a memory **13**, a wireless

transceiver **14**, an input device **15**, and a display **17**. The memory may be volatile memory, such as RAM, or non-volatile memory, such as flash RAM or a hard drive. The input device **15** may be a keyboard, a thumbwheel, or a trackball, for example. The input device **15** may also be a microphone or a wireless receiver (e.g. bluetooth), as will be appreciated by those of skill in the art. Of course, the display **17** may be a touch sensitive screen and may therefore also serve as the input device **15**. In addition, the mobile wireless communications device **12** may include a portable housing and a rechargeable battery.

[0025] The processor **16** cooperates with the memory **13** and the wireless transceiver **14** for communicating with an intermediate server **22** via a wireless network **11**, that may typically be provided by a cellular telephone network, but any suitable network (for example, WiFi) may be used. The network may be a Code Division Multiple Access (CDMA) network, a 3G network, or other suitable cellular network. Such a cellular network provides for data transfer communications in addition to voice communications, and provides connectivity with the Internet.

[0026] The intermediate server **22** comprises a processor **24** cooperating with a memory **25** and a transceiver **23** for communicating with the application server **18**. This communication may be via the Internet. The processor **24**, and a memory **25** of the intermediate server **22** are also for obtaining respective current version information for associated current versions of the plurality of applications. That is, the intermediate server **22** learns the versions of the applications stored on the application server **18**. The intermediate server **22** may obtain this current version information by polling the application

server **22**, or the application server may send it to the intermediate server without a request therefrom, for example via a server push. Alternatively or additionally, the current version information may be sent to the intermediate server **22** from an outside source (i.e. an administrator).

[0027] The processor **24** and memory **25** of the intermediate server **22** further obtain stored user application version information from the mobile wireless communications device **12**. That is, the intermediate server **22** learns the version of at least one application stored on the mobile wireless communications device **12**. The intermediate server **22** may obtain the stored user application version from the mobile wireless communications device **12** by polling it, or the mobile wireless communications device may send the stored user application version to the intermediate server without a request therefrom, for example via a server push.

[0028] The processor **24** and the memory **25** of the intermediate server **22** cooperate to compare the stored user application version with the current version information for the at least one stored user application. If the comparison shows that the stored user application (on the mobile wireless communications device **12**) is an older version than the corresponding application stored on the application server **18**, the intermediate server **22** downloads, via the transceiver **33**, new application portions from the corresponding application stored on the application server **18**. Before the intermediate server **22** downloads the new application portions, it compares the application stored on the mobile wireless communications

device **12** with the corresponding application stored on the application server **18**.

[0029] Referring now to FIG. 2A, this comparison is now explained. The application stored on the mobile wireless communications device **12** has portions A, B, and C. The corresponding application stored on the application server **18** is a newer version of the application and includes portions A, B, C, D, and E. The intermediate server **18** downloads application portions D and E, as they are new application portions not included in the version of the application stored on the mobile wireless communications device **12**.

[0030] After the intermediate server **18** downloads the new application portions, it sends them, via the transceiver **23**, to the mobile wireless communications device **12** (which downloads them via its transceiver **14**) to thereby update the mobile wireless communications device. The processor **16** and memory **13** of the mobile wireless communications device **12** cooperate to install the new application portions. As shown in FIG. 2B, new application portions D and E have been added to the application stored on the mobile wireless communications device **12** (D and E are shaded to show they have been added).

[0031] Another example of the comparing and updating is now described with reference to FIGS. 3A and 3B. In FIG. 3A, the application stored on the mobile wireless communications device **12** has portions A, B, and C. The corresponding application stored on the application server **18** is a newer version of the application and includes application portions A, C, D, E, and F. Thus, application portions D, E, and F are new, while portion B has been removed. The intermediate server **18** downloads application

portions D, E, and F as they are the new application portions not included in the version of the application stored on the mobile wireless communications device **12**. Further, the intermediate server **22** records that portion B has been removed from the newer version of the application.

[0032] The processor **16** and memory **13** of the mobile wireless communications device **12** cooperate to install the new application portions and to remove the application portions no longer contained in the newer version of the application. As shown in FIG. 3B, the new application portions D, E, and F have been added to the application stored on the mobile wireless communications device **12** (D, E, and F are shaded to show they have been added), while application portion B has been removed (indicated with an X).

[0033] Those skilled in the art will appreciate that the processor **16** and memory **13** of the mobile wireless communications device **12** may cooperate to install the new application portions based upon user input (approval from the user to install the new application portions) or based upon no user input. In some instances, the mobile wireless communications device **12** may accept user input of which applications may have new application portions installed therefore without user input, and of which applications may have the new application portions installed based upon user input or approval.

[0034] In the embodiment schematically illustrated in FIG. 1, the intermediate server **22** updates the mobile wireless communications device by sending the new application portions to the mobile wireless communications device **12** without a request therefrom, for example using a server push. Of course, in other embodiments, the mobile

wireless communications device **12** may instead poll the intermediate server **22** for the new application portions.

[0035] In addition, in the illustrated embodiment, the mobile wireless communications device **12** selectively sends the stored application version information to the intermediate server **22**. The mobile wireless communications device **12** may accept user selection of which stored application version information about which stored user application may be sent to the intermediate server **22**. Therefore, the user may advantageously choose which applications he/she would like the intermediate server **22** to update as a matter of course.

[0036] In addition to updating applications already stored in the memory **13** of the mobile wireless communications device **12**, the intermediate server **22** may send notification of new applications thereto based upon at least one selection preference. The selection preference may be a user selection of an application type, application name, application developer, features supported by an application (i.e. touch screen input, device orientation sensor input from a mobile wireless communications device so equipped, etc), or other suitable selection preference. For example, a user may wish to be notified of any game releases related to a certain movie, or related to a political election.

[0037] This functionality of the mobile wireless communications device **12** is now described with additional reference to FIG. 4. Here, the display **17** of the mobile wireless communications device **12** is displaying a list of application categories to the user. The user has selected that he/she would like to receive notification of the availability of new card & casino games, as indicated by

the check mark in the box next to that category. This selection preference has been sent from the mobile wireless communications device **12** to the intermediate server **22**.

[0038] With further reference to FIG. 1, the intermediate server **22** sends notification of availability of at least one new application to the mobile wireless communications device **12** based upon the at least one selection preference, without a request therefrom. For example, this notification may be sent via a server push, but in other embodiments, the mobile wireless communications device **12** may instead query the intermediate server **22** for availability of the at least one new application.

[0039] Shown in FIG. 5 is the notification received by the mobile wireless communications device **12** and displayed on the display **17** thereof. Here, the mobile wireless communications device **12** has received and is displaying notification of the availability of ABC Solitaire, XYZ Poker, and QQQ Black Jack. The user may now select at least one of the applications to download and install. The download may be directly from the application server **18** or may instead be from the intermediate server **22**. In some applications, the application server **18** or the intermediate server **22** may send the new applications to the mobile wireless communications device **12** without a request therefrom, for example via a server push.

[0040] Those skilled in the art will understand that the application server **18** and the intermediate server **22** need not be separate entities. Indeed, such an alternative embodiment of the communications system **10'** is now described with reference to FIG. 7. In this embodiment, the application server **18'** comprises an application module **40'**

to store the plurality of applications and an intermediate module **41'**. The application module **40'** and the intermediate module **41'** perform the same functions as the application server **18** and intermediate server **22**, respectively, as described above. As such, no further description of the application module **40'** and intermediate module **41'** is required, although it should be noted that the application module and intermediate module may comprise computer executable instructions that are stored in the memory **19'** of the application server **18'** and executed by the processor **20'** of the application server.

[0041] A method of operating an intermediate server in accordance with the present disclosure is now described with reference to flowchart **30** of FIG 6. After the start (Block **31**), at Block **32**, respective current version information is obtained from an application server for associated current versions of a plurality of applications stored thereon. At Block **33**, stored application version information is obtained from at least one mobile wireless communications device for at least one application stored thereon.

[0042] At Block **34**, the stored application version information is compared with the current version information for the at least one stored application. At Block **35**, new application portions are downloaded from a current application associated with the current version information. At Block **36**, the new application portions are sent to the at least one mobile wireless communications device. Block **37** indicates the end of the method.

[0043] Exemplary components of a hand-held mobile wireless communications device **1000** that may be used in accordance with the present disclosure are further

described in the example below with reference to FIG. 8. The device **1000** illustratively includes a housing **1200**, a keypad **1400** and an output device **1600**. The output device shown is a display **1600**, which may comprise a full graphic LCD. In some embodiments, display **1600** may comprise a touch-sensitive input and output device. Other types of output devices may alternatively be utilized. A processing device **1800** is contained within the housing **1200** and is coupled between the keypad **1400** and the display **1600**. The processing device **1800** controls the operation of the display **1600**, as well as the overall operation of the mobile device **1000**, in response to actuation of keys on the keypad **1400** by the user. In some embodiments, keypad **1400** may comprise a physical keypad or a virtual keypad (e.g., using a touch-sensitive interface) or both.

[0044] The housing **1200** may be elongated vertically, or may take on other sizes and shapes (including clamshell housing structures). The keypad **1400** may include a mode selection key, or other hardware or software for switching between text entry and telephony entry.

[0045] In addition to the processing device **1800**, other parts of the mobile device **1000** are shown schematically in FIG. 8. These include a communications subsystem **1001**; a short-range communications subsystem **1020**; the keypad **1400** and the display **1600**, along with other input/output devices **1060**, **1080**, **1100** and **1120**; as well as memory devices **1160**, **1180** and various other device subsystems **1201**. The mobile device **1000** may comprise a two-way RF communications device having voice and data communications capabilities. In addition, the mobile device **1000** may have the capability to communicate with other computer systems via the Internet.

[0046] Operating system software executed by the processing device **1800** may be stored in a persistent store, such as the flash memory **1160**, but may be stored in other types of memory devices, such as a read only memory (ROM) or similar storage element. In addition, system software, specific device applications, or parts thereof, may be temporarily loaded into a volatile store, such as the random access memory (RAM) **1180**. Communications signals received by the mobile device may also be stored in the RAM **1180**.

[0047] The processing device **1800**, in addition to its operating system functions, enables execution of software applications **1300A-1300N** on the device **1000**. A predetermined set of applications that control basic device operations, such as data and voice communications **1300A** and **1300B**, may be installed on the device **1000** during manufacture. In addition, a personal information manager (PIM) application may be installed during manufacture. The PIM may be capable of organizing and managing data items, such as e-mail, calendar events, voice mails, appointments, and task items. The PIM application may also be capable of sending and receiving data items via a wireless network **1401**. The PIM data items may be seamlessly integrated, synchronized and updated via the wireless network **1401** with the device user's corresponding data items stored or associated with a host computer system.

[0048] Communication functions, including data and voice communications, are performed through the communications subsystem **1001**, and possibly through the short-range communications subsystem. The communications subsystem **1001** includes a receiver **1500**, a transmitter **1520**, and one or more antennas **1540** and **1560**. In addition, the

communications subsystem **1001** also includes a processing module, such as a digital signal processor (DSP) **1580**, and local oscillators (LOs) **1601**. The specific design and implementation of the communications subsystem **1001** is dependent upon the communications network in which the mobile device **1000** is intended to operate. For example, a mobile device **1000** may include a communications subsystem **1001** designed to operate with the Mobitex™, Data TAC™ or General Packet Radio Service (GPRS) mobile data communications networks, and also designed to operate with any of a variety of voice communications networks, such as AMPS, TDMA, CDMA, WCDMA, PCS, GSM, EDGE, etc. Other types of data and voice networks, both separate and integrated, may also be utilized with the mobile device **1000**. The mobile device **1000** may also be compliant with other communications standards such as 3GSM, 3G, UMTS, 4G, etc.

[0049] Network access requirements vary depending upon the type of communication system. For example, in the Mobitex and DataTAC networks, mobile devices are registered on the network using a unique personal identification number or PIN associated with each device. In GPRS networks, however, network access is associated with a subscriber or user of a device. A GPRS device therefore utilizes a subscriber identity module, commonly referred to as a SIM card, in order to operate on a GPRS network.

[0050] When required network registration or activation procedures have been completed, the mobile device **1000** may send and receive communications signals over the communication network **1401**. Signals received from the communications network **1401** by the antenna **1540** are routed to the receiver **1500**, which provides for signal amplification, frequency down conversion, filtering,

channel selection, etc., and may also provide analog to digital conversion. Analog-to-digital conversion of the received signal allows the DSP **1580** to perform more complex communications functions, such as demodulation and decoding. In a similar manner, signals to be transmitted to the network **1401** are processed (e.g. modulated and encoded) by the DSP **1580** and are then provided to the transmitter **1520** for digital to analog conversion, frequency up conversion, filtering, amplification and transmission to the communication network **1401** (or networks) via the antenna **1560**.

[0051] In addition to processing communications signals, the DSP **1580** provides for control of the receiver **1500** and the transmitter **1520**. For example, gains applied to communications signals in the receiver **1500** and transmitter **1520** may be adaptively controlled through automatic gain control algorithms implemented in the DSP **1580**.

[0052] In a data communications mode, a received signal, such as a text message or web page download, is processed by the communications subsystem **1001** and is input to the processing device **1800**. The received signal is then further processed by the processing device **1800** for an output to the display **1600**, or alternatively to some other auxiliary I/O device **1060**. A device user may also compose data items, such as e-mail messages, using the keypad **1400** and/or some other auxiliary I/O device **1060**, such as a touchpad, a rocker switch, a thumb-wheel, track ball, or some other type of input device. The composed data items may then be transmitted over the communications network **1401** via the communications subsystem **1001**.

[0053] In a voice communications mode, overall operation of the device is substantially similar to the data

communications mode, except that received signals are output to a speaker **1100**, and signals for transmission are generated by a microphone **1120**. Alternative voice or audio I/O subsystems, such as a voice message recording subsystem, may also be implemented on the device **1000**. In addition, the display **1600** may also be utilized in voice communications mode, for example to display the identity of a calling party, the duration of a voice call, or other voice call related information.

[0054] The short-range communications subsystem enables communication between the mobile device **1000** and other proximate systems or devices, which need not necessarily be similar devices. For example, the short-range communications subsystem may include an infrared device and associated circuits and components, or a Bluetooth™ communications module to provide for communication with similarly-enabled systems and devices

[0055] Many modifications and other embodiments of the invention will come to the mind of one skilled in the art having the benefit of the teachings presented in the foregoing descriptions and the associated drawings. Therefore, it is understood that the invention is not to be limited to the specific embodiments disclosed, and that modifications and embodiments are intended to be included within the scope of the appended claims.

THAT WHICH IS CLAIMED IS:

1. A communications system to communicate with an application server storing a plurality of applications, the communications system comprising:

at least one mobile wireless communications device configured to store at least one application from among the plurality of applications, the at least one application having stored version information associated therewith; and

an intermediate server configured to update said at least one mobile wireless communications device by at least

obtaining current version information for current versions of the plurality of applications,

obtaining the stored application version information from said at least one mobile wireless communications device for the at least one stored application,

comparing the stored application version information with the current version information for the at least one stored application,

downloading new application portions from a current application associated with the current version information, and

sending the new application portions to said at least one mobile wireless communications device.

2. The communications system of Claim 1, wherein said intermediate server obtains current version information from the application server.

3. The communications system of Claim 1, wherein said intermediate server updates said at least one mobile wireless device without a request therefrom.

4. The communications system of Claim 1, wherein said intermediate server also sends a notification to said least one mobile wireless communications device of availability of at least one new application based upon at least one selection preference.

5. The communications system of Claim 4, wherein said intermediate server sends the notification without a request from said at least one mobile wireless communications device.

6. The communications system of Claim 4, wherein the at least one selection preference comprises at least one of an application type and an application name.

7. The communications system of Claim 1, wherein said at least one mobile wireless communications device selectively permits said intermediate server to obtain the stored version information.

8. The communications system of Claim 1, wherein said at least one mobile wireless communications device installs the new application portions without user input.

9. The communications system of Claim 1, wherein said at least one mobile wireless communications device installs the new application portions based upon user input.

10. The communications system of Claim 1, wherein said at least one mobile communications device comprises a processor and a memory cooperating therewith.

11. The communications system of Claim 1, wherein said intermediate server comprises a processor and a memory cooperating therewith.

12. An intermediate server configured to communicate with an application server storing a plurality of applications and to update at least one mobile wireless communications device, the at least one mobile wireless communications device configured to store at least one application from among the plurality of applications, the at least one application having stored version information associated therewith, the intermediate server comprising:

a processor and a memory cooperating therewith and configured to

obtain current version information for current versions of the plurality of applications,

obtain the stored application version information from the at least one mobile wireless communications device for the at least one stored application,

compare the stored application version information with the current version information for the at least one stored application,

download new application portions from a current application associated with the current version information, and

send the new application portions to said at least one mobile wireless communications device.

13. The intermediate server of Claim 12, wherein said processor and said memory obtain current version information for associated current versions of the plurality of applications from the application server.

14. The intermediate server of Claim 12, wherein said processor and said memory update the at least one mobile wireless device without a request therefrom.

15. The intermediate server of Claim 12, wherein said processor and said memory also send a notification to the least one mobile wireless communications device of availability of at least one new application based upon at least one selection preference.

16. The intermediate server of Claim 15, wherein said processor and said memory send the notification without a request from the at least one mobile wireless communications device.

17. A method of operating an intermediate server for communicating with an application server storing a plurality of applications for updating a mobile wireless communications device storing at least one application from among the plurality of applications, the at least one application having stored version information associated therewith, the method comprising:

obtaining current version information for current versions of the plurality of applications;

obtaining the stored application version information from the at least one mobile wireless communications device for the at least one stored application;

comparing the stored application version information with the current version information for the at least one stored application;

downloading new application portions from a current application associated with the current version information; and

sending the new application portions to the at least one mobile wireless communications device.

18. The method of Claim 17, wherein the current version information for associated current versions of the plurality of applications is obtained from the application server.

19. The method of Claim 17, wherein the intermediate server updates the at least one mobile wireless device without a request therefrom.

20. The method of Claim 17, further comprising sending a notification to the least one mobile wireless communications device of availability of at least one new application based upon at least one selection preference.

21. The method of Claim 20, wherein the notification is sent without a request from the at least one mobile wireless communications device.

22. The method of Claim 17, wherein the at least one selection preference comprises at least one of an application type and an application name.

23. A communications system comprising:

an application server comprising an application module for storing a plurality of applications;

at least one mobile wireless communications device configured to store at least one application from among the plurality of applications, the at least one application having stored version information associated therewith; and

said application server further comprising an intermediate module configured to update said at least one mobile wireless communications device by at least

obtaining current version information from said application module for current versions of the plurality of applications,

obtaining the stored application version information from said at least one mobile wireless communications device for the at least one stored application,

comparing the stored application version information with the current version information for the at least one stored application,

downloading new application portions from a current application associated with the current version information, and

sending the new application portions to said at least one mobile wireless communications device.

24. The communications system of Claim 23, wherein said intermediate module updates the at least one mobile wireless device without a request therefrom.

25. The communications system of Claim 23, wherein said intermediate module also sends a notification to the least one mobile wireless communications device of availability of at least one new application based upon at least one selection preference.

26. The communications system of Claim 15, wherein said intermediate module sends the notification without a request from the at least one mobile wireless communications device.

27. A server to cooperate with at least one mobile wireless communications device configured to store at least one application having stored version information associated therewith, the at least one stored application being from among a plurality of applications, the server comprising:

a processor and a memory coupled thereto and configured to store the plurality of applications and update the at least one mobile wireless communications device by at least

obtaining respective current version information for associated current versions of the plurality of applications,

obtaining the stored application version information from the at least one mobile wireless communications device for the at least one stored application,

comparing the stored application version information with the current version information for the at least one stored application, and

sending new application portions to the at least one mobile wireless communications device from a current application associated with the current version information.

28. The server of Claim 27, wherein said processor and memory are configured to update the at least one mobile wireless communications device without a request therefrom.

29. The server of Claim 27, wherein said processor and memory are configured to send a notification to the least one mobile wireless communications device of availability of at least one new application based upon at least one selection preference.

30. The server of Claim 29, wherein said processor and memory are configured to send the notification without a request from the at least one mobile wireless communications device.

31. The server of Claim 29, wherein the at least one selection preference comprises at least one of an application type and an application name.

32. A communications system comprising:

at least one mobile wireless communications device configured to store at least one application having stored version information associated therewith, the at least one

stored application being from among a plurality of applications; and

a server comprising a processor and a memory coupled thereto and configured to store the plurality of applications and update the at least one mobile wireless communications device by at least

obtaining respective current version information for associated current versions of the plurality of applications,

obtaining the stored application version information from the at least one mobile wireless communications device for the at least one stored application,

comparing the stored application version information with the current version information for the at least one stored application, and

sending new application portions to the at least one mobile wireless communications device from a current application associated with the current version information.

33. The communications system of Claim 32, wherein said processor and memory are configured to update the at least one mobile wireless communications_device without a request therefrom.

34. The communications system of Claim 32, wherein said processor and memory are configured to send a notification to the least one mobile wireless communications device of availability of at least one new application based upon at least one selection preference.

35. The communications system of Claim 34, wherein said processor and memory are configured to send the notification without a request from the at least one mobile wireless communications device.

36. The communications system of Claim 34, wherein the at least one selection preference comprises at least one of an application type and an application name.

37. The communications system of Claim 32, wherein said at least one mobile wireless communications device installs the new application portions without user input.

38. The communications system of Claim 32, wherein said at least one mobile wireless communications device installs the new application portions based upon user input.

39. A method of using a server to update at least one mobile wireless communications device configured to store at least one application having stored version information associated therewith, the at least one stored application being from among a plurality of applications, the method comprising:

storing the plurality of applications in the server; and

operating the server to at least

obtain respective current version information for associated current versions of the plurality of applications,

obtain the stored application version information from the at least one mobile wireless

communications device for the at least one stored application,

compare the stored application version information with the current version information for the at least one stored application, and

send new application portions to the at least one mobile wireless communications device from a current application associated with the current version information.

40. The method of Claim 39, further comprising operating the server to update the at least one mobile wireless communications device without a request therefrom.

41. The method of Claim 39, further comprising operating the server to send a notification to the least one mobile wireless communications device of availability of at least one new application based upon at least one selection preference.

42. The method of Claim 41, further comprising operating the server to send the notification without a request from the at least one mobile wireless communications device.

43. The method of Claim 41, wherein the at least one selection preference comprises at least one of an application type and an application name.

44. A server remote from a mobile wireless communications device including a stored application with associated stored version information, the server comprising:

a processor and a memory coupled thereto and configured to

obtain the stored version information from the mobile wireless communications device for the stored application,

compare the stored version information with available different version information for the stored application, and

send different application portions to the mobile wireless communications device based on the available different version information.

45. The server of Claim 44, wherein said processor and memory are configured to send the different application portions to the mobile wireless communications device without a request therefrom.

46. The server of Claim 44, wherein said processor and memory are configured to send a notification to the mobile wireless communications device of availability of different application portions based upon at least one selection preference.

47. The server of Claim 46, wherein said processor and memory are configured to send the notification without a request from the mobile wireless communications device.

48. The server of Claim 46, wherein the at least one selection preference comprises at least one of an application type and an application name.

49. A communications system comprising:

a mobile wireless communications device including a stored application with associated stored version information; and

a server, remote from said mobile wireless communications device, comprising a processor and a memory coupled thereto and configured to

obtain the stored version information from the mobile wireless communications device for the stored application,

compare the stored version information with available different version information for the stored application, and

send different application portions to the mobile wireless communications device based on the available different version information.

50. The communications system of Claim 49, wherein said processor and memory are configured to send different application portions to said mobile wireless communications device without a request therefrom.

51. The communications system of Claim 49, wherein said processor and memory are configured to send a notification to said mobile wireless communications device of availability of different application portions based upon at least one selection preference.

52. The communications system of Claim 51, wherein said processor and memory are configured to send the notification without a request from said mobile wireless communications device.

53. The communications system of Claim 51, wherein the at least one selection preference comprises at least one of an application type and an application name.

54. The communications system of Claim 49, wherein said mobile wireless communications device installs the different application portions without user input.

55. The communications system of Claim 49, wherein said mobile wireless communications device installs the different application portions based upon user input.

56. A method of using a server remote from a mobile wireless communications device including a stored application with associated stored version information, the server comprising a processor and a memory coupled thereto, the method comprising:

operating the processor and memory coupled thereto so as to

obtain the stored version information from the mobile wireless communications device for the stored application,

compare the stored version information with available different version information for the stored application, and

send different application portions to the mobile wireless communications device based on the available different version information.

57. The method of Claim 56 further comprising operating the processor and memory coupled thereto to send the

different application portions without a request from the mobile wireless communications device.

58. The method of Claim 56, further comprising operating the processor and memory coupled thereto to send a notification to the mobile wireless communications device of availability of different application portions based upon at least one selection preference.

59. The method of Claim 58, further comprising operating the processor and memory coupled thereto to send the notification without a request from the mobile wireless communications device.

60. The method of Claim 58, wherein the at least one selection preference comprises at least one of an application type and an application name.

61. A mobile wireless communications device for communications with a communications system including an application server storing a plurality of applications, the mobile wireless communications device comprising:

a memory configured to store at least one application from among the plurality of applications, the at least one application having stored version information associated therewith;

a wireless transceiver; and

a processor cooperating with said memory and said wireless transceiver and configured to

selectively permit an intermediate server to obtain the stored version information, and, when permitted

send the stored application version information for the at least one stored application to the intermediate server based upon a request therefrom, and

receive new application portions of a current application associated with the current version information from the intermediate server.

62. The mobile wireless communications device of Claim 61, wherein said processor installs the new application portions without user input.

63. The mobile wireless communications device of Claim 61, wherein said processor installs the new application portions based upon user input.

64. The mobile wireless communications device of Claim 61, wherein said processor is configured to receive a notification of availability of different application portions based upon at least one selection preference.

65. The mobile wireless communications device of Claim 64, wherein the at least one selection preference comprises at least one of an application type and an application name.

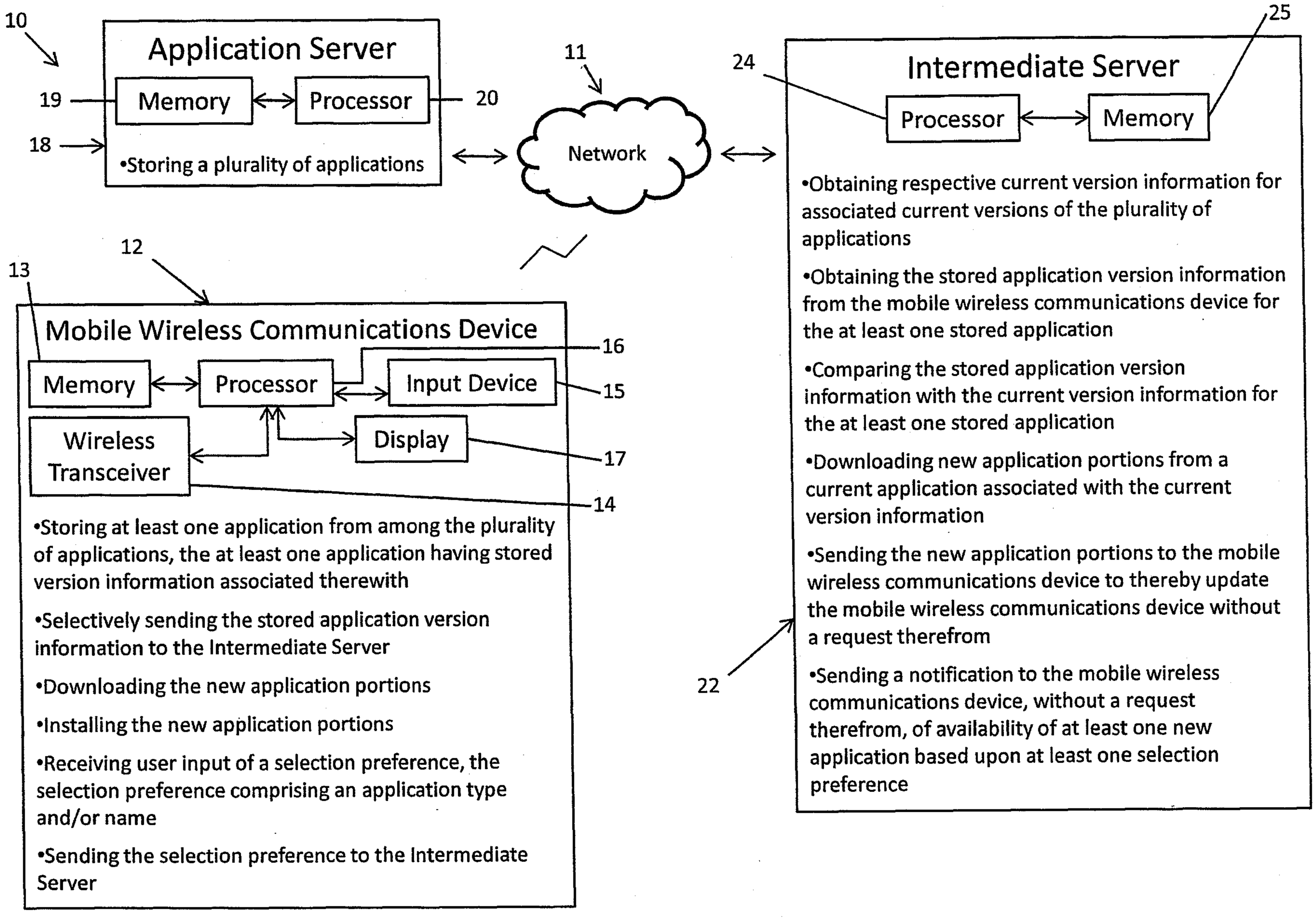

FIG. 1

CA 02675351 2009-08-12

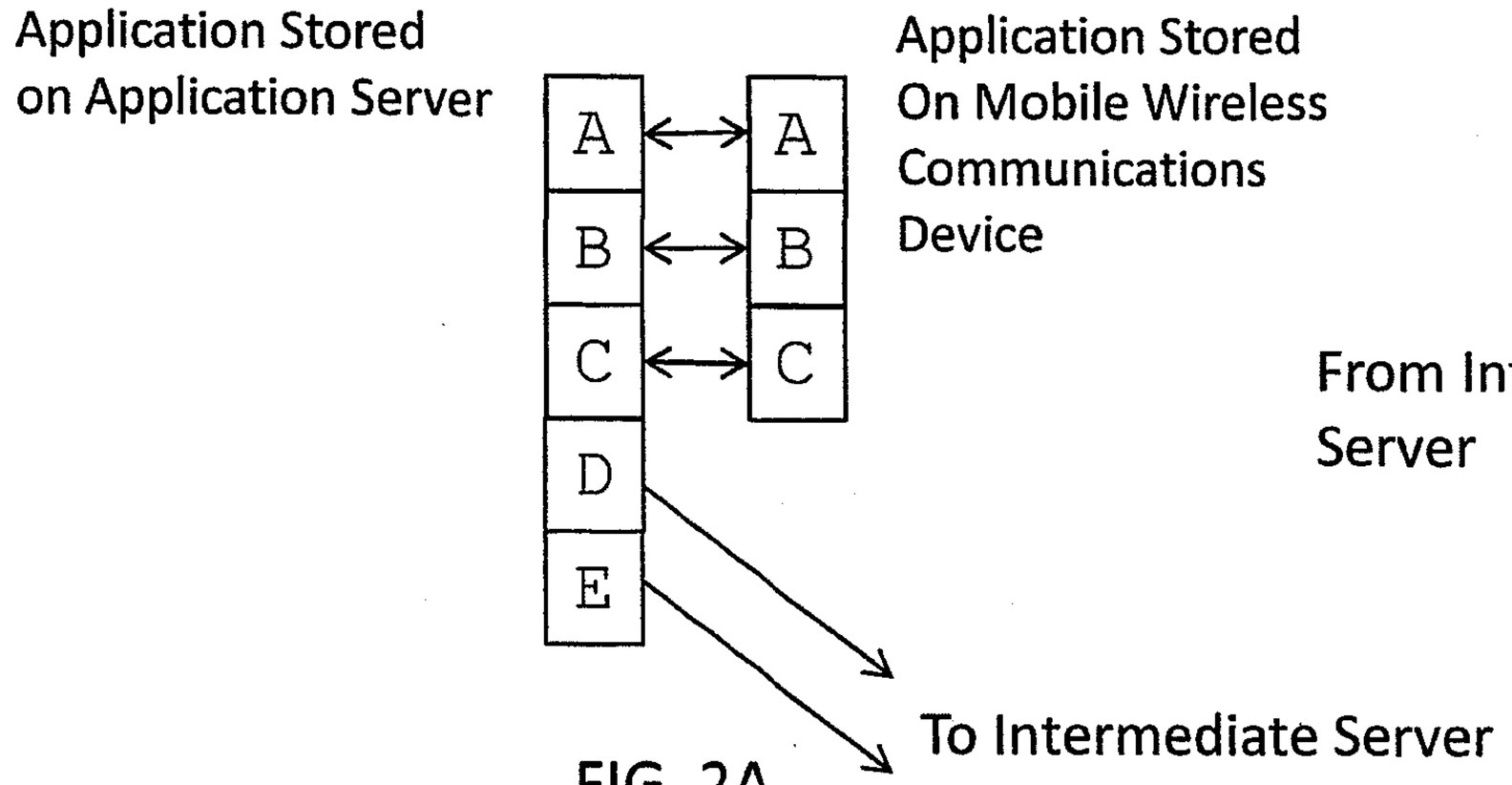

FIG. 2A

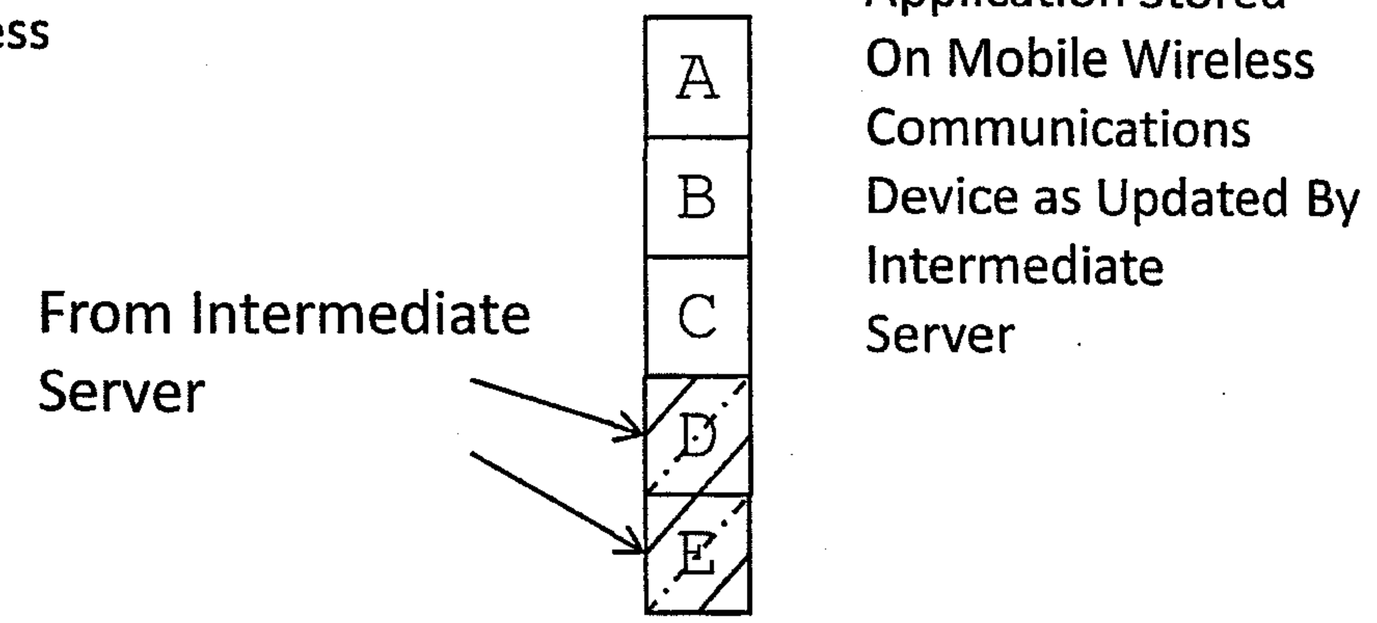

FIG. 2B

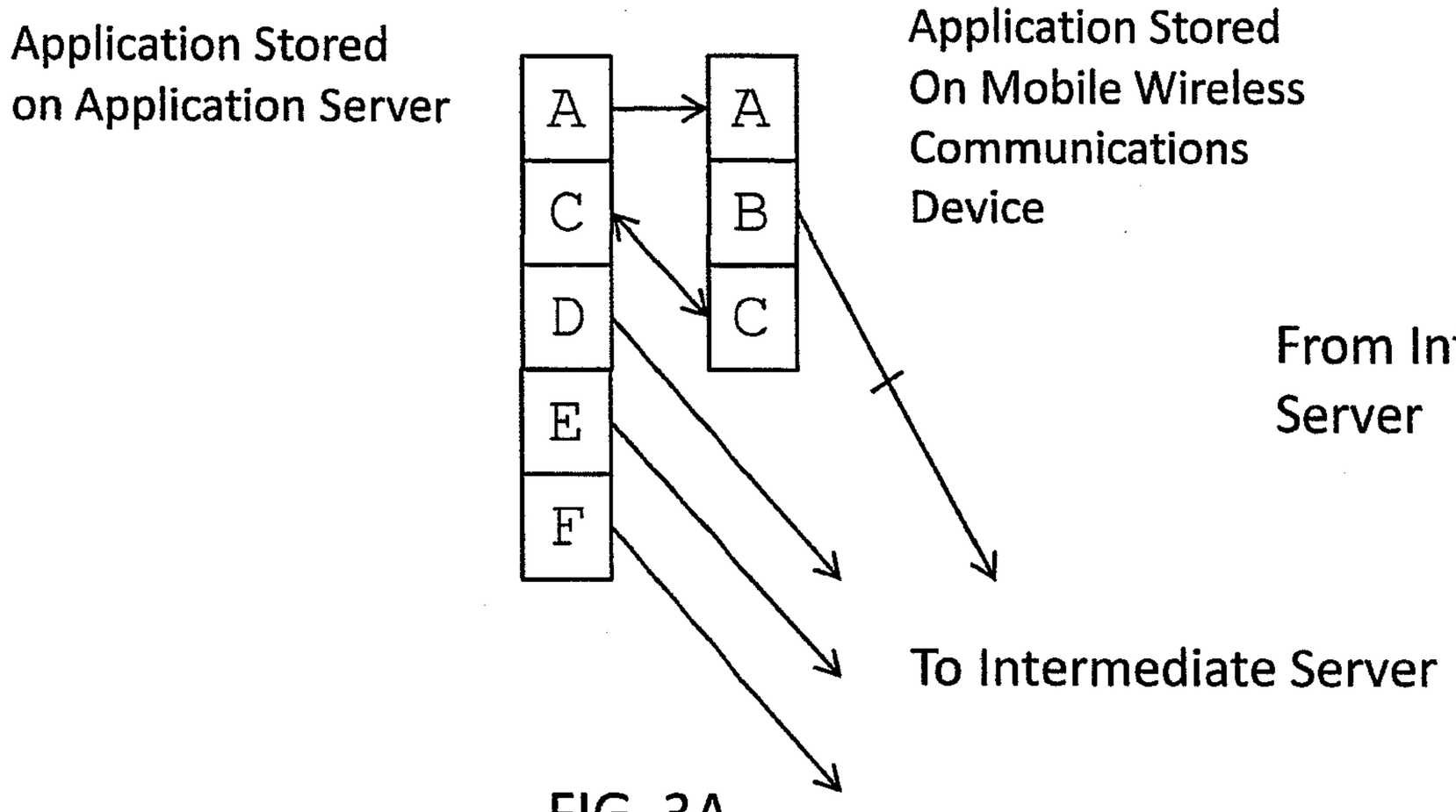

FIG. 3A

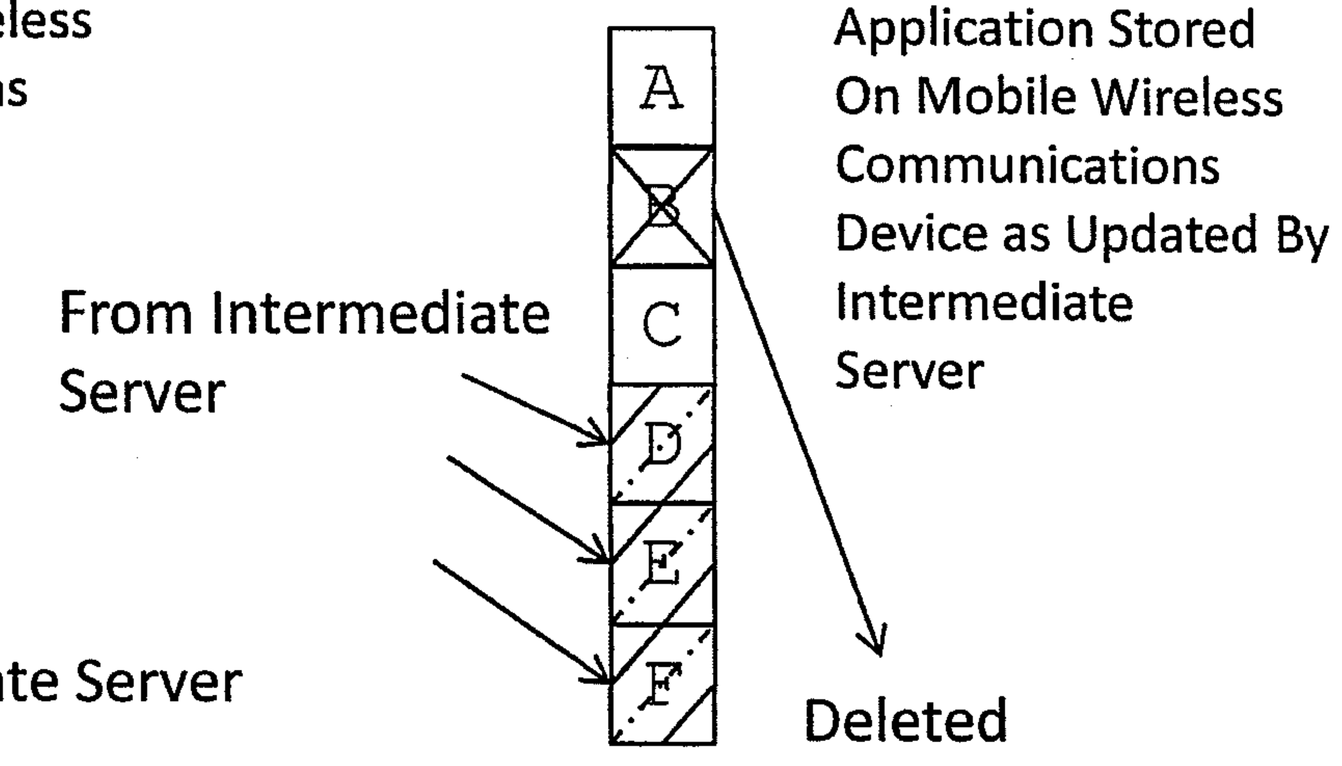

FIG. 3B

CA 02675351 2009-08-12

12

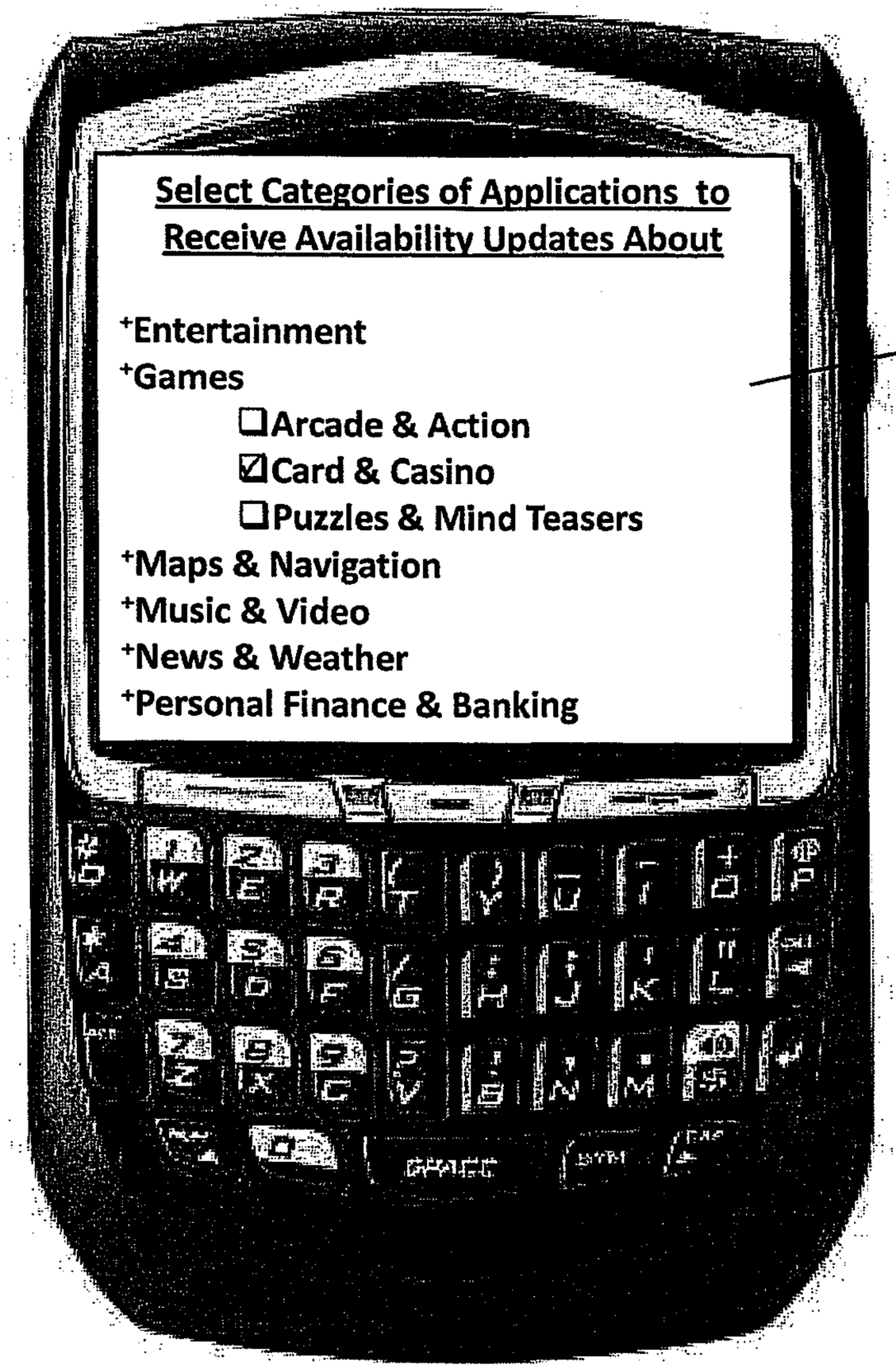

FIG. 4

CA 02675351 2009-08-12

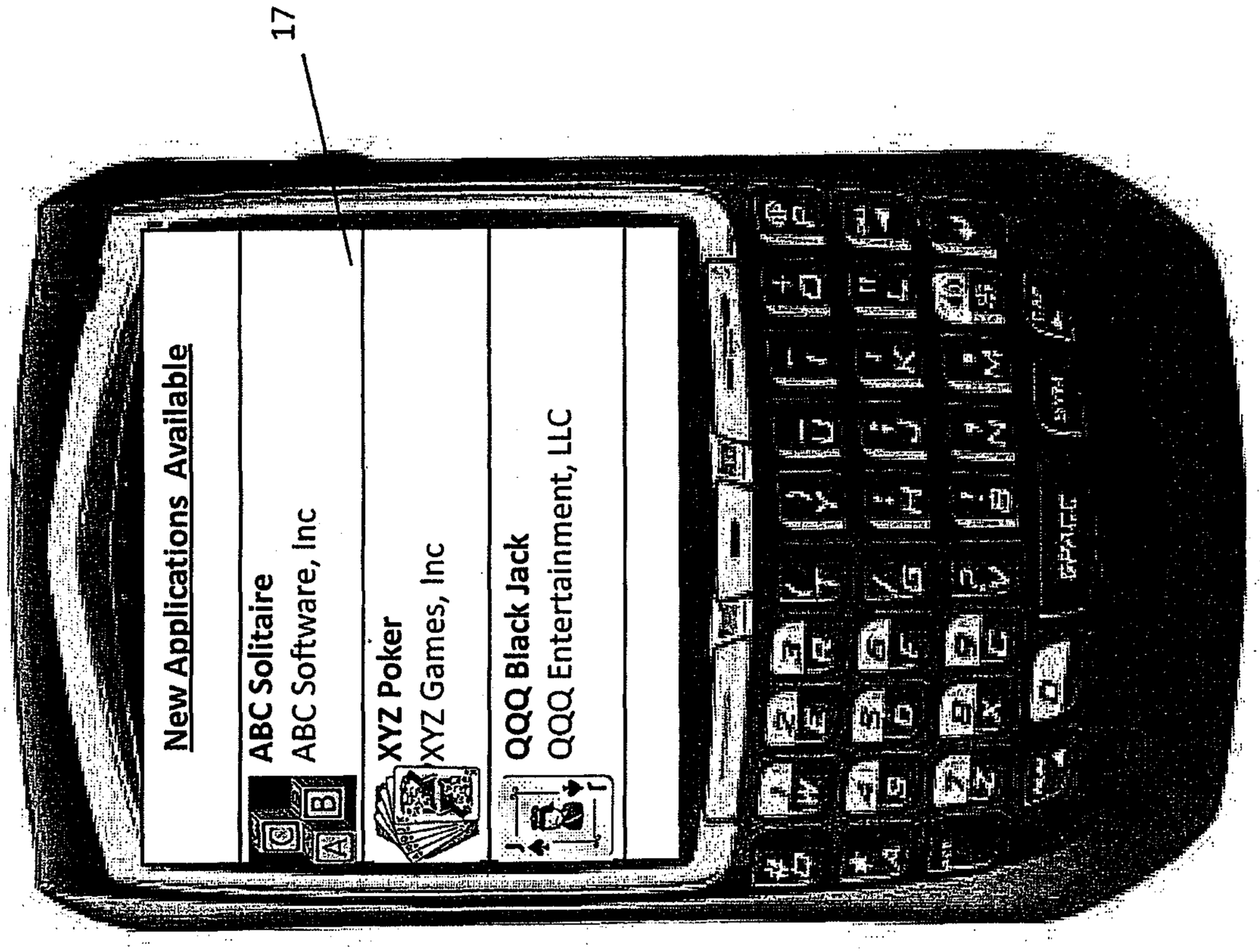
17
New Applications Available
ABC Solitaire
ABC Software, Inc
XYZ Poker
XYZ Games, Inc
QQQ Black Jack
QQQ Entertainment, LLC

FIG. 5

12

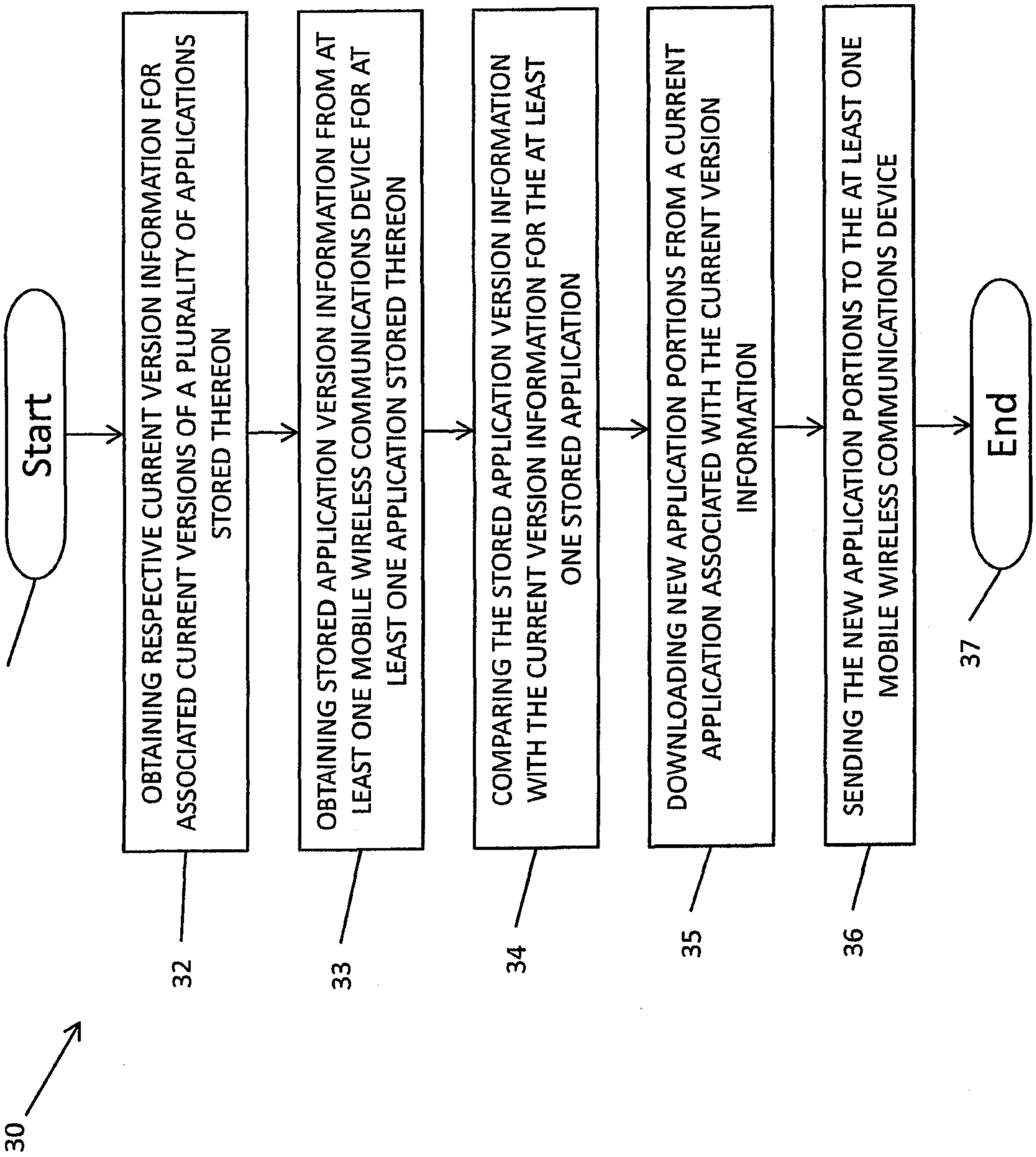
Start
31
OBTAINING RESPECTIVE CURRENT VERSION INFORMATION FOR ASSOCIATED CURRENT VERSIONS OF A PLURALITY OF APPLICATIONS STORED THEREON
32
OBTAINING STORED APPLICATION VERSION INFORMATION FROM AT LEAST ONE MOBILE WIRELESS COMMUNICATIONS DEVICE FOR AT LEAST ONE APPLICATION STORED THEREON
33
COMPARING THE STORED APPLICATION VERSION INFORMATION WITH THE CURRENT VERSION INFORMATION FOR THE AT LEAST ONE STORED APPLICATION
34
DOWNLOADING NEW APPLICATION PORTIONS FROM A CURRENT APPLICATION ASSOCIATED WITH THE CURRENT VERSION INFORMATION
35
SENDING THE NEW APPLICATION PORTIONS TO THE AT LEAST ONE MOBILE WIRELESS COMMUNICATIONS DEVICE
36
End
37
30

FIG. 6

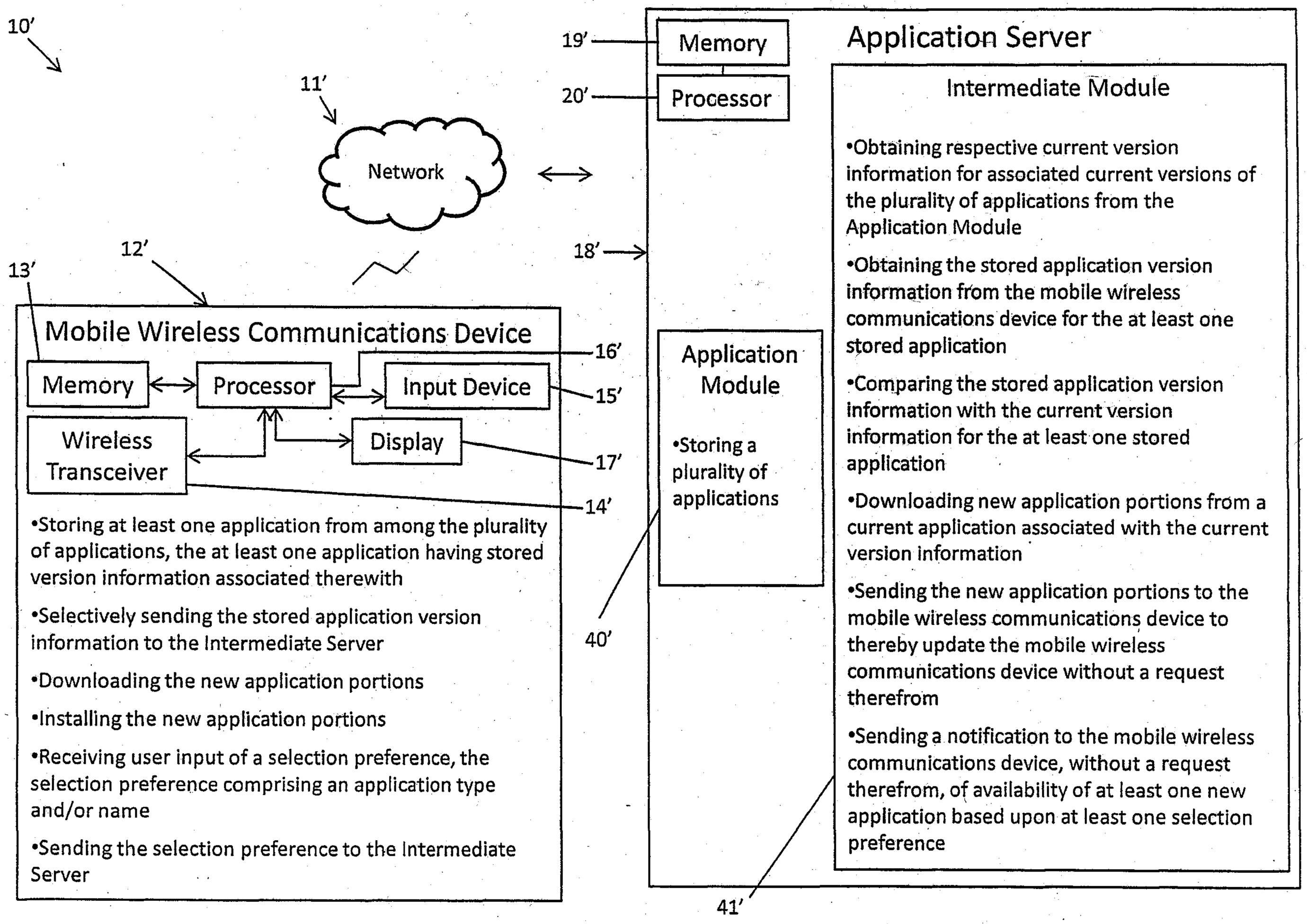

FIG. 7

CA 02675351 2009-08-12

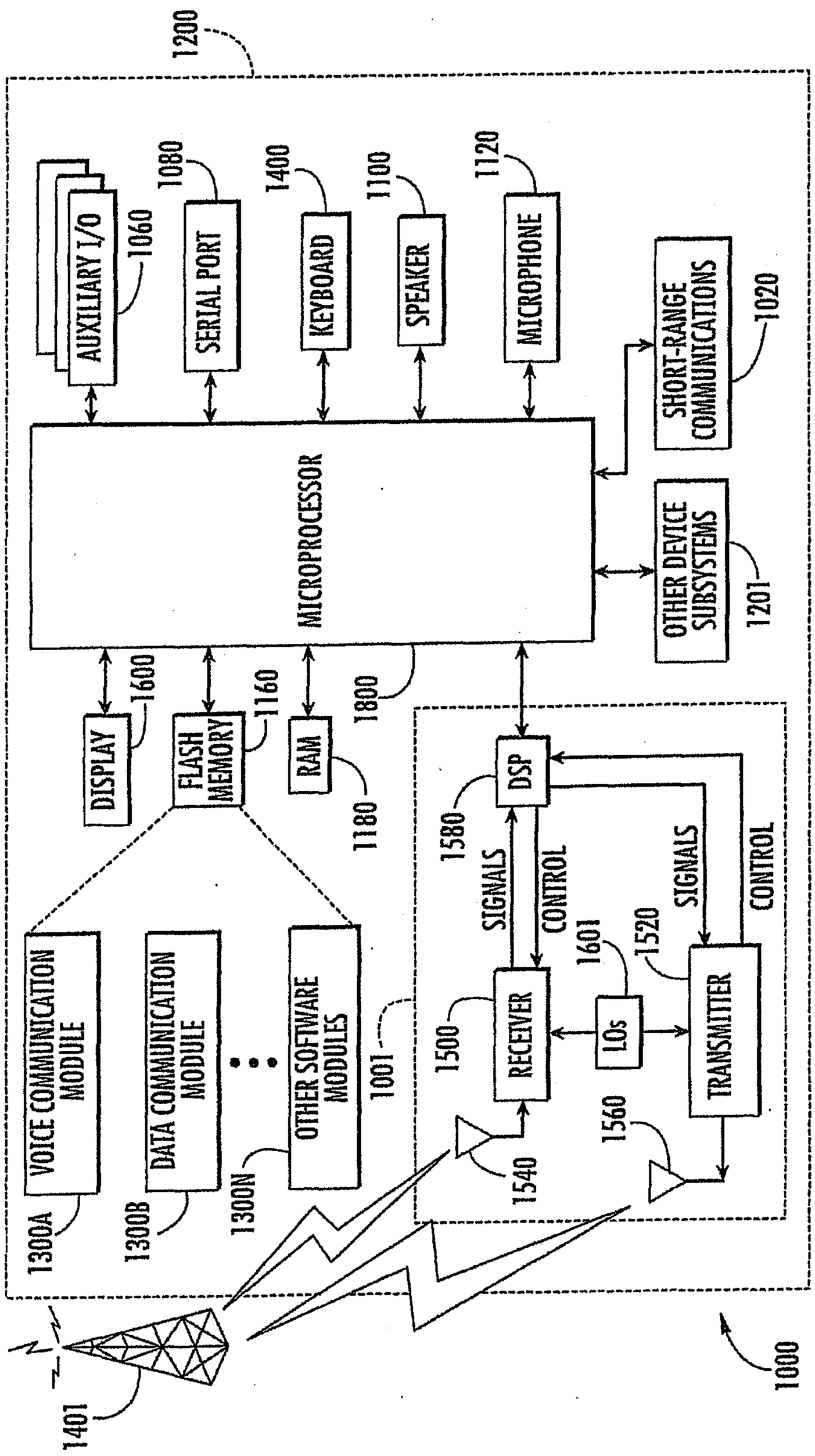
1200
AUXILIARY I/O
1060
SERIAL PORT
1080
KEYBOARD
1400
SPEAKER
1100
MICROPHONE
1120
SHORT-RANGE COMMUNICATIONS
1020
OTHER DEVICE SUBSYSTEMS
1201
MICROPROCESSOR
DISPLAY
1600
FLASH MEMORY
1160
RAM
1180
1800
VOICE COMMUNICATION MODULE
1300A
DATA COMMUNICATION MODULE
1300B
OTHER SOFTWARE MODULES
1300N
1001
DSP
1580
SIGNALS
CONTROL
RECEIVER
1500
LOs
1601
1520
TRANSMITTER
1540
1560
1401
1000

FIG. 8

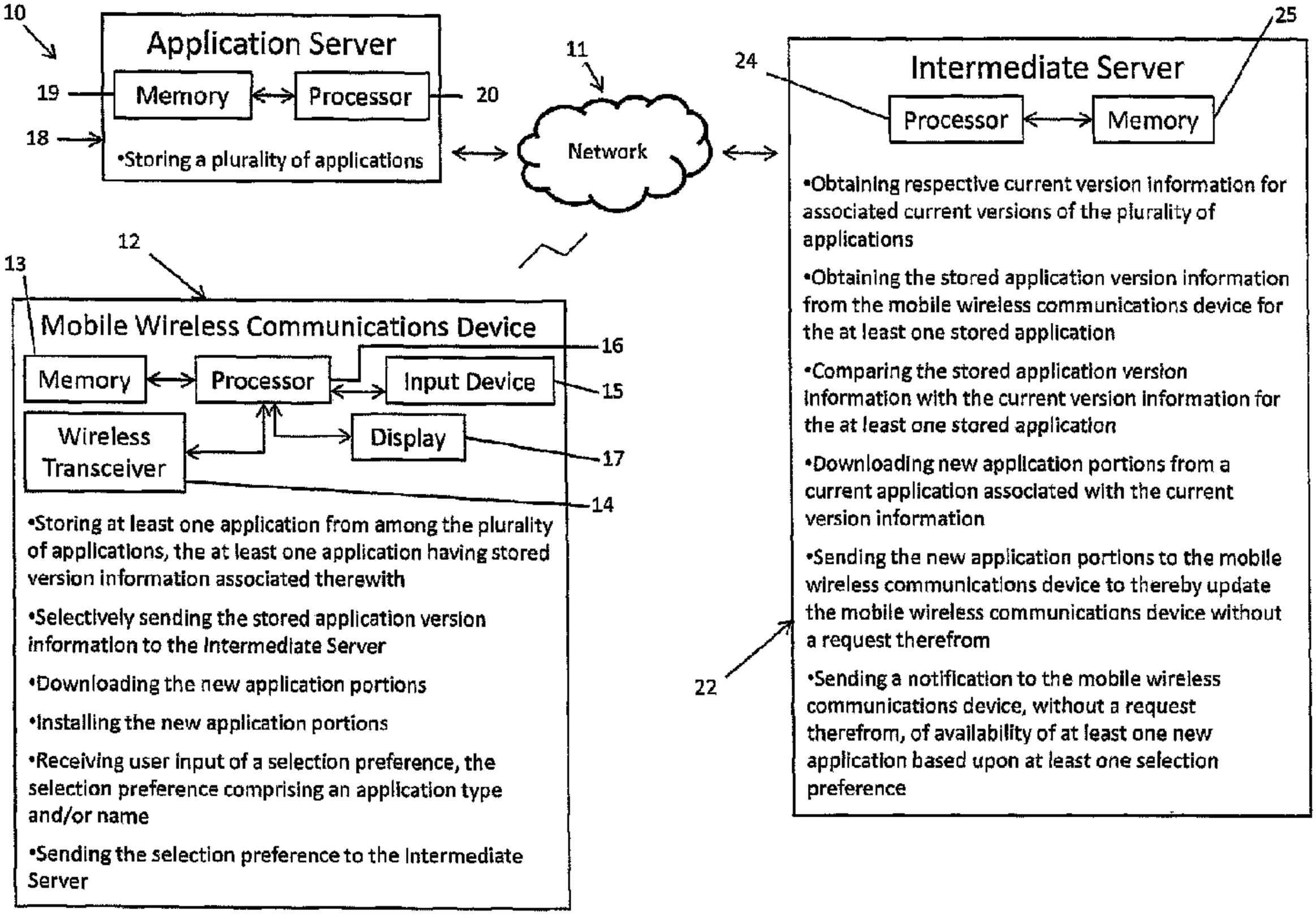
10
Application Server
19
Memory
Processor
20
18
•Storing a plurality of applications
11
Network
24
25
Intermediate Server
Processor
Memory
•Obtaining respective current version information for associated current versions of the plurality of applications
•Obtaining the stored application version information from the mobile wireless communications device for the at least one stored application
•Comparing the stored application version information with the current version information for the at least one stored application
•Downloading new application portions from a current application associated with the current version information
•Sending the new application portions to the mobile wireless communications device to thereby update the mobile wireless communications device without a request therefrom
•Sending a notification to the mobile wireless communications device, without a request therefrom, of availability of at least one new application based upon at least one selection preference
22
12
13
Mobile Wireless Communications Device
Memory
Processor
16
Input Device
15
Wireless Transceiver
Display
17
14
•Storing at least one application from among the plurality of applications, the at least one application having stored version information associated therewith
•Selectively sending the stored application version information to the Intermediate Server
•Downloading the new application portions
•Installing the new application portions
•Receiving user input of a selection preference, the selection preference comprising an application type and/or name
•Sending the selection preference to the Intermediate Server