Sept. 16, 1924. 1,508,462

C. F. MAYER

OVEN WALL

Filed Nov. 24, 1922

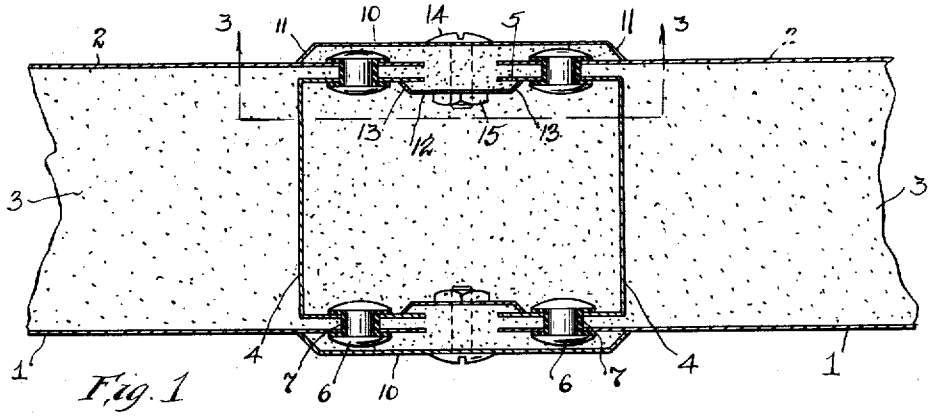

Fig. 1

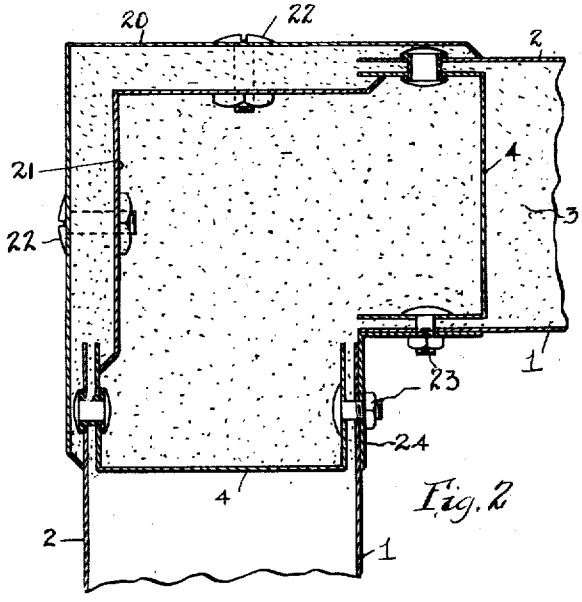

Fig. 2

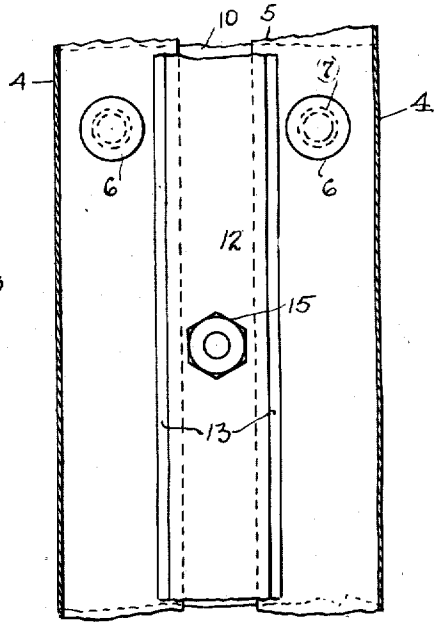

Fig. 3

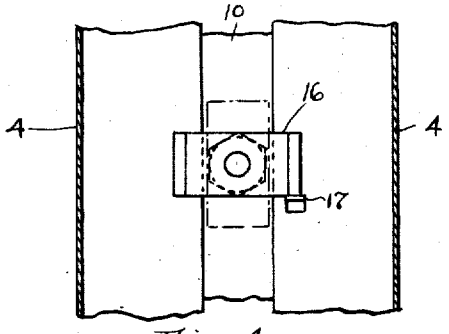

Fig. 4

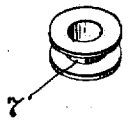

Fig. 5

INVENTOR.

Carl F. Mayer

BY

Paul Oberlin & Paul

ATTORNEYS

Patented Sept. 16, 1924. 1,508,462

UNITED STATES PATENT OFFICE.

CARL F. MAYER, OF CLEVELAND, OHIO.

OVEN WALL.

Application filed November 24, 1922. Serial No. 603,091.

To all whom it may concern:

Be it known that I, CARL F. MAYER, a citizen of the United States, and a resident of Cleveland, county of Cuyahoga, and State of Ohio, have invented a new and useful Improvement in Oven Walls, of which the following is a specification, the principle of the invention being herein explained and the best mode in which I have contemplated applying that principle, so as to distinguish it from other inventions.

The present improvements relating, as indicated, to oven walls have more particular regard to the construction of heat insulating walls of the sectional type such as are commonly used in the construction of various kinds of ovens, such as core ovens, enameling ovens, drying ovens and the like. In such walls the component sections are preferably made of two spaced parallel plates with a filling of suitable insulating material therebetween, and the principal problem presented is the efficient joining together of these sections, so that the wall will possess the necessary mechanical strength and at the same time waste of heat through the joints be avoided.

One object of the present invention, accordingly, is the provision of a satisfactory insulating joint for use with such sections of a heat insulating oven wall, namely, a joint that will reduce to a minimum the conduction of heat through the wall, that may be readily assembled at the place where the oven is erected, and that when assembled will render the joint as strong and rigid as the remainder of the wall. At the same time the edges of the wall sections that enter into the construction of such joint are made with the parts permanently secured in place, the use of separable securing or clamping means being entirely done away with.

To the accomplishment of the foregoing and related ends, the invention, then, consists of the means hereinafter fully described and particularly pointed out in the claims, the annexed drawing and the following description setting forth in detail certain mechanism embodying the invention, such disclosed means constituting, however, but one of various mechanical forms in which the principle of the invention may be used.

In said annexed drawing:—

Fig. 1 is a horizontal section showing the juxtaposed ends of two sections of an oven wall constructed in accordance with my invention, the same being secured together by means of my improved joint; Fig. 2 is a similar horizontal section showing the manner in which two such wall sections are joined together at a corner; Fig. 3 is an inside elevation of a broken section of my improved joint, the plane of the section being indicated by the line 3—3, Fig. 1; Fig. 4 is a view similar to that of Fig. 3, but showing a modification in construction; and Fig. 5 is a perspective view of a detail.

The size of the component sections of my improved oven wall may of course vary, depending upon circumstances and particularly the size of the oven as a whole. Ordinarily such sections will be of rectangular slab-like form. It will be understood that in Fig. 1 and likewise in Fig. 2, only the edges and the immediately adjacent portions of two juxtaposed sections are shown.

Each such section comprises an inner metallic plate 1 and a similar outer plate 2 spaced therefrom, the space between such plates being filled with any suitable insulating material 3, such as asbestos or the like. The lateral edges of such sections, which require to be joined together in order to form a continuous wall, are closed by means of channel strips 4 that are disposed with their flanges 5 directed outwardly and in parallel relation with the edge portions of the plates 1 and 2. Such channel strips are not as wide as the space between said plates, so that the flanges in question lie some distance therefrom, respectively, the intervening space being filled with insulating material just as is the larger clear space between the plates. In order to retain such channel strips in proper relation to the plates, as well as to secure them permanently thereto, double-headed rivets 6 or equivalent securing elements, are passed through suitable aligned apertures in the flanges 5 and adjacent edge portions of the plates, such rivets being kept out of direct contact with the flanges and edge portions by means of interposed flanged sleeves 7 of insulating material, the form of which is best shown in Fig. 5. In other words, said sleeve not only surrounds the body of the rivet, but the flanges thereof form washers that lie between the heads of the rivet and the adjacent flange or plate, as the case may be.

A wall section constructed as aforesaid

it will be seen, is a self-contained unit since the channel strips are permanently held in place and so are adapted to retain the plates 1 and 2 in properly spaced relation as well as to prevent the insulating filler 3 from escaping. At the same time the interposition of the sleeves 7 between the rivets 6 and the flanges and adjacent edge portions of the plates prevents the direct transfer of heat from one plate to the other by way of the channel strip.

In assembling sections constructed as aforesaid to form a straight wall, the sections are brought with their edges into juxtaposed relation, as shown in Fig. 1. The respective flanges of the channels 4 that close the juxtaposed edges of the section, together with the adjacent edge portions of the corresponding plates 1 and 2 and the insulating material interposed between the same, constitute in effect inner and outer flanges on the section and these flanges, it will be noted, (in other words, the edges of flanges 5 and of such edge portions of the plates), are spaced a certain distance apart so as not directly to contact with each other in the case of the two wall sections to be joined. The means for connecting the sections together comprise an outer strip 10 disposed parallel with the joint between said sections or the flanges thus projecting therefrom, said strip 10 being turned inwardly along its edges to form inclined flanges 11 that contact with the plates 2, 2, or 1, 1, as the case may be, of the juxtaposed sections and lie outside of the rivets 6. A strip 12 provided with flanges 13, similar to the flanges 11 of strip 10, is disposed in reverse position against the composite flanges projecting from the edges of the sections, i. e. against the flanges of the corresponding channels 4, said strip 12 being narrower than strip 10 so that the flanges 13 thereon lie within the corresponding rivets 6. The two strips are then drawn together so as to forcibly press against the respective surfaces whereon their flanges bear by means of set bolts 14 that pass through suitable apertures in the outer strip 10 and engage with nuts 15, preferably welded or otherwise permanently secured to the inner strip 12. The longitudinal extent of such inner strip 12 is a matter of indifference. It may either consist of a strip co-extensive with the joint, as shown in Fig. 3, or it may be quite short so as to form simply a cleat 16, as shown in Fig. 4. For convenience the inner strip will be hereinafter referred to as a cleat. Where of the form shown in Fig. 4, cleat 16 is prevented from rotating when said bolt 14 is tightened up by means of a stop 17 on the inner face of one of the flanges 5.

When two wall sections are secured together by the clamping means just described, consisting of the outer or cover strip 10 and one or more inner cleats, the space lying between the edge strips 4 and the two outer strips 10 is completely filled with insulating material just as is the space between the two plates of the individual section.

Where a corner requires to be constructed of wall sections such as have hereinbefore been described, substantially the same method of joining the angularly related edges of the two juxtaposed sections is followed as where the sections are aligned. However, the outer strip 20 will here preferably take the angular form shown in Fig. 2 and the inner strip or cleat 21 will, of course, be of the same form, two sets of bolts 22, one on each side of the angle, being employed to draw such inner and outer strips together, in the case of the outer or convex corner. In the case of the inner or concave corner, where the space between the juxtaposed composite flanges of the wall sections is less, pairs of bolts 23, passing directly through such flanges and the flanges of an angle 24 will suffice.

Other modes of applying the principle of my invention may be employed instead of the one explained, change being made as regards the mechanism herein disclosed, provided the means stated by any of the following claims or the equivalent of such stated means be employed.

I therefore particularly point out and distinctly claim as my invention:—

1. In a sectional heat insulating wall, the combination of inner and outer spaced metallic plates, a channel strip disposed between and with its side flanges substantially parallel with the edge portions of said plates, insulating material interposed between such flanges and portions, and means permanently connecting such flanges and portions together.

2. In a sectional heat insulating wall, the combination of inner and outer spaced metallic plates, a channel strip disposed between and with its side flanges substantially parallel with the edge portions of said plates, insulating material interposed between such flanges and portions, and securing elements passing through such flanges and portions whereby they are permanently connected.

3. In a sectional heat insulating wall, the combination of inner and outer spaced metallic plates, a channel strip disposed between and with its side flanges substantially parallel with the edge portions of said plates, insulating material interposed between such flanges and portions, and securing elements passing through such flanges and portions whereby they are permanently connected, said elements being insulated from said flanges and portions.

4. In a sectional heat insulating wall, the combination of inner and outer spaced me-

tallic plates, a channel strip disposed between and with its side flanges substantially parallel with the edge portions of said plates, insulating material interposed between such flanges and portions, rivets passing through such flanges and portions whereby they are permanently connected, and flanged sleeves of insulating material surrounding said rivets and preventing direct contact thereof with the parts in question.

5. In a sectional heat insulating wall, the combination with sections each comprising inner and outer spaced metallic plates, a channel strip disposed between and with its side flanges substantially parallel with the edge portions of said plates, insulating material interposed between such flanges and portions, and means securing such flanges to such portions; of means for connecting adjacent sections together, said means including an outer strip disposed parallel with the joint between said sections and bearing against the edge portions of the juxtaposed plates, an inner cleat similarly bearing against the juxtaposed flanges of the corresponding channel strips, and means adapted to draw said outer strip and cleat together.

6. In a sectional heat insulating wall, the combination with sections each comprising inner and outer spaced metallic plates, a channel strip disposed between and with its side flanges substantially parallel with the edge portions of said plates, insulating material interposed between such flanges and portions, and means securing such flanges to such portions; of means for connecting adjacent sections together, said means including an outer strip disposed parallel with the joint between said sections and bearing against the edge portions of the juxtaposed plates, an inner cleat similarly bearing against the juxtaposed flanges of the corresponding channel strips, a nut carried by said cleat, and a set bolt passing through said outer strip and engaging said nut; whereby said strip and cleat may be drawn together.

7. In a sectional heat insulating wall, the combination with sections each comprising inner and outer spaced metallic plates, a channel strip disposed between and with its side flanges substantially parallel with the edge portions of said plates, insulating material interposed between such flanges and portions, and rivets passing through such flanges and portions whereby they are permanently connected; of means for connecting adjacent sections together, said means including an outer strip disposed parallel with the joint between said sections and spanning said rivets and bearing against the edge portions of the juxtaposed plates, an inner cleat similarly spanning said rivets and bearing against the juxtaposed flanges of the corresponding channel strips, and means adapted to draw said outer strip and cleat together.

8. In a sectional heat insulating wall, the combination with sections formed along their juxtaposed edges with corresponding inner and outer flanges parallel with the sides of said sections; of means for connecting adjacent sections together, said means including a strip disposed parallel with the joint between said sections and bearing against the outer faces of the corresponding flanges thereon, an inner cleat similarly bearing against the inner faces of such flanges, and means adapted to draw said strip and cleat together.

9. In a sectional heat insulating wall, the combination with sections formed along their juxtaposed edges with corresponding inner and outer flanges parallel with the sides of said sections; of means for connecting adjacent sections together, said means including a strip disposed parallel with the joint between said sections and bearing against the outer faces of the corresponding flanges thereon, an inner cleat similarly bearing against the inner faces of such flanges, a nut carried by said cleat, a set bolt passing through said outer strip and engaging said nut, whereby said strip and cleat may be drawn together, and a stop on one of said flanges adapted to retain said cleat in proper position.

Signed by me this 22nd day of November, 1922.

CARL F. MAYER.