Dec. 20, 1932. A. HENDERSON 1,891,763

FLOOR STRUCTURE AND SLAB THEREFOR

Filed Nov. 3, 1927 2 Sheets-Sheet 1

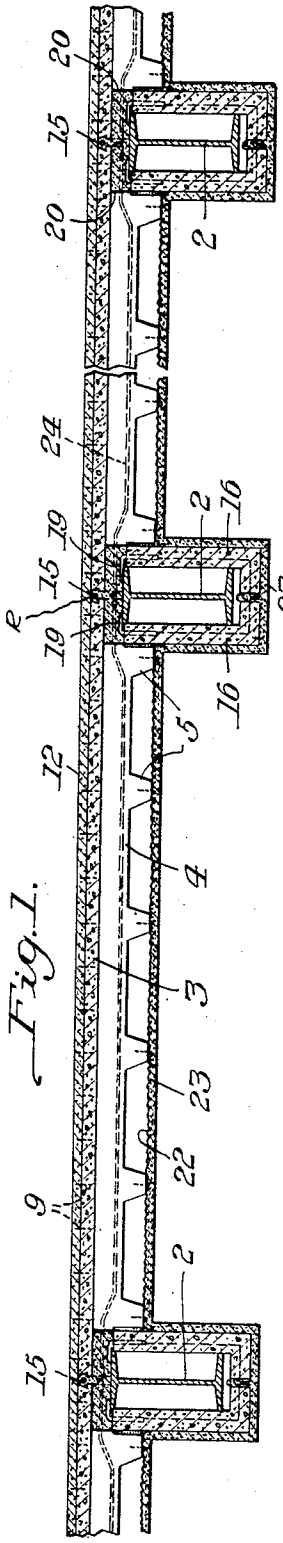

Fig. 1.

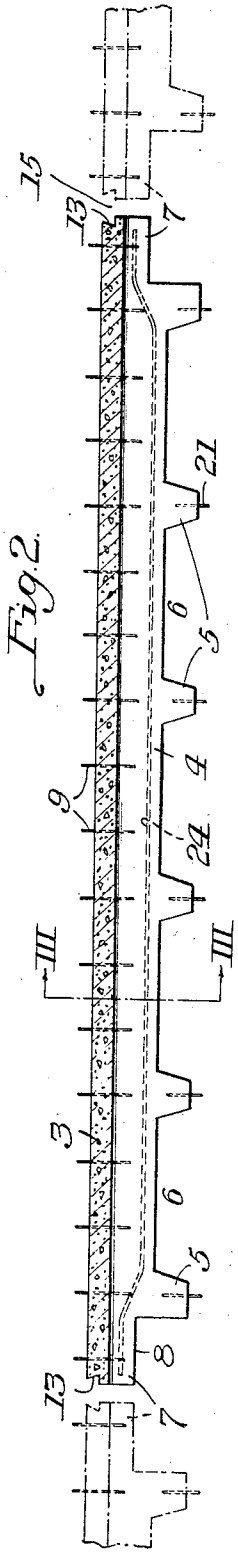

Fig. 2.

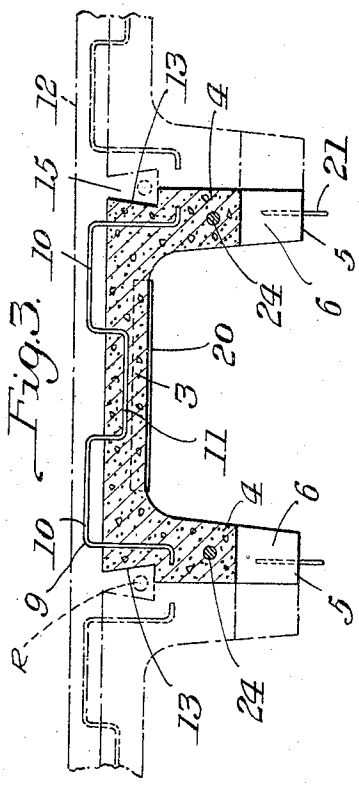

Fig. 3.

INVENTOR
Albert Henderson
by his Atty
Byrnes, Gibbins & Pomeroy

Dec. 20, 1932. A. HENDERSON 1,891,763

FLOOR STRUCTURE AND SLAB THEREFOR

Filed Nov. 3, 1927 2 Sheets-Sheet 2

Fig. 4.

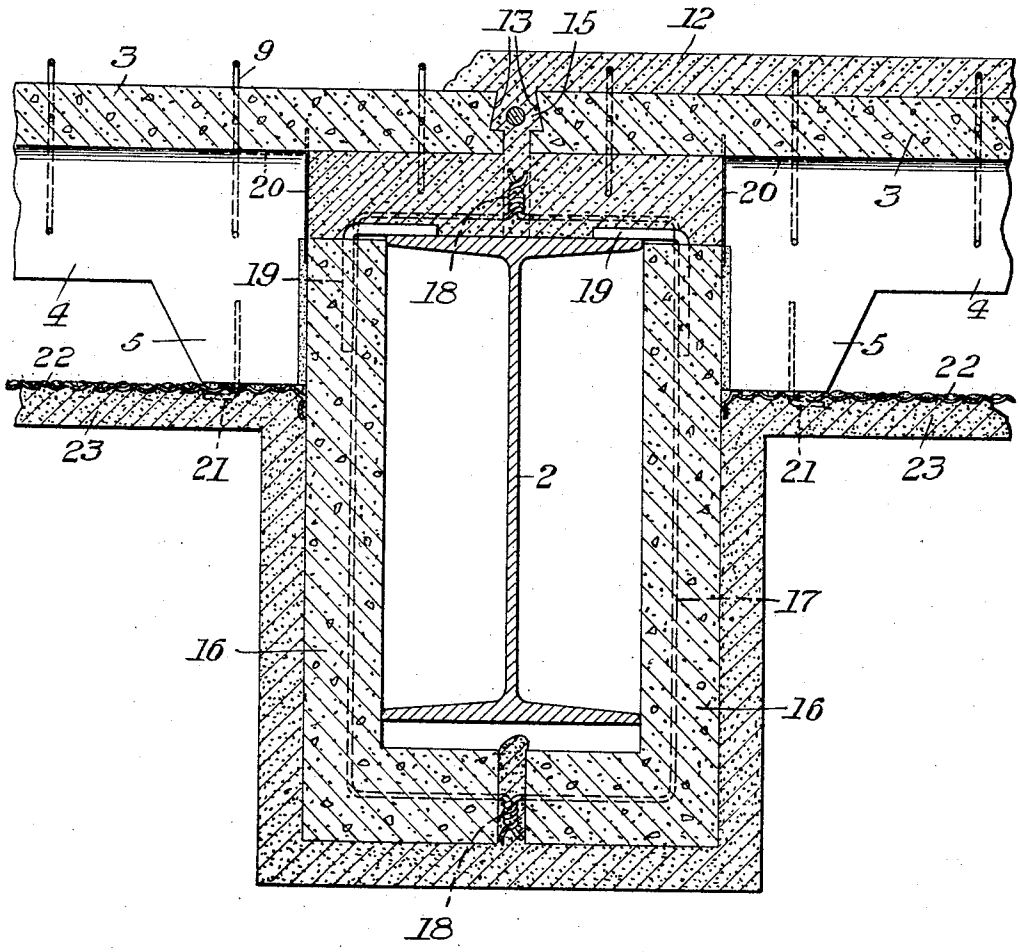

INVENTOR

Albert Henderson

by his attys.

Byrnes, Stebbins & Parmelee

Patented Dec. 20, 1932 1,891,763

UNITED STATES PATENT OFFICE

ALBERT HENDERSON, OF PITTSBURGH, PENNSYLVANIA, ASSIGNOR TO GENERAL CEMENT PRODUCTS COMPANY, OF PITTSBURGH, PENNSYLVANIA, A CORPORATION OF PENNSYLVANIA

FLOOR STRUCTURE AND SLAB THEREFOR

Application filed November 3, 1927. Serial No. 230,768.

The present invention is directed to floors of a cementitious character, and more particularly to an improved floor slab unit and a floor construction built therefrom.

At the present time it is common practice to set up the steel work of large buildings, and thereafter provide forms between the beams and pour the flooring around the forms. Not only is such an operation extremely slow, but it necessitates accurate laying of all pipes, conduits, and the like, before the floor is poured. Calculations of standard building constructions show that the dead load of the floor structures per square foot in standard buildings is in excess of the live load per square foot which such floors are designed to carry.

I provide an improved floor construction adapted to be laid without the use of any forms, and of such nature that not only is the dead load materially descreased, but the strength is increased. At the same time, provision is made for the expeditious laying or re-arranging of conduits, pipes, and the like, as desired or as found necessary.

I further provide a preformed floor slab of such nature that a complete floor may be temporarily laid for purposes of convenience during the erection of the framework, or that sections of the flooring may be installed temporarily and thereafter easily removed if desired.

In ordinary constructions employing preformed concrete beams and a cement finish coat, the finish coat is regarded as dead load and not as part of the beam. This is due to the fact that no provision is made for strongly tying the finish coat to the beams so that it acts therewith. I provide means on the top of the floor slabs adapted to bond with a field cast floor finish so that the finish coat becomes an integral part of the beam and may be included in the calculations. I also provide recesses between adjacent slabs so as to permit of employing tie rods running lengthwise and crosswise of the floor. The finish coat extends into these recesses and firmly bonds with the tie rods.

I further provide means on the precast beams for securing a ceiling or ceiling-portion to the bottoms of the beams. It is generally only necessary to give the beams a depth which is relatively less than the distance ordinarily provided from floor to ceiling, and I therefore provide cementitious downwardly extending portions to which a ceiling may be secured. These downwardly extending portions are preferably provided with metal posts or studs which may be inserted through openings in metallic lath and bent over to hold the lath in place. Similar fastening means may be employed for other forms of ceilings, as for example, pressed metal ceilings.

In the accompanying drawings there is shown, by way of illustration and not by way of limitation, one form of floor structure and slab constructed in accordance with and embodying the novel features of the present invention.

In the drawings,

Figure 1 is a sectional view through a portion of a floor illustrating my improved slabs in position therein,

Figure 2 is a longitudinal sectional view through one of the floor slabs,

Figure 3 is a transverse sectional view through one of the floor slabs, showing the position of adjacent slabs, and

Figure 4 is a sectional view on an enlarged scale through one of the beams, illustrating a preferred manner of fireproofing the same, and showing the slabs in cooperative relation thereto.

Referring more particularly to the drawings, a floor made in accordance with the present invention comprises beams 2 suitably spaced and extending in a substantially parallel relation one to the other. Provided for cooperation with these beams is a series of preformed slabs, each of generally channel shape in cross-section as shown in Figure 3. This provides a main body portion 3 having depending flanges 4. The depending legs 4 are made of sufficient depth to give a beam of the desired strength. For usual installations this beam is materially shallower than the distance betwen the floor and the ceiling therebelow. On the bottom faces of the flanges 4 there are provided spaced projec-

tions 5. The openings 6 between these projections leave a free space through which conduits, pipes, wires and the like may be readily passed.

The slabs are each formed with end projections 7 having a length substantially equal to half the width of the flanges on the beams with which they are to cooperate, whereby the projections may overlie the beams, as shown in Figure 1. The end projections 7 are made of sufficient depth to resist the shear load. This generally requires a depth somewhat less than the depth of the body of the beam, and this is of value since it reduces the total required distance from the bottom of the beams to the floor proper.

As above stated, the field cast floor finish, which is applied to the floor when completely laid, is generally considered merely as dead load. In order to firmly unite the cement finish with the beams, the beams are each provided with wires 9 which are embedded in the beam. The wires are bent so that the end portions are embedded while loops 10 project above the top surface. The middle portions of the wires are formed into loops 11 which are also embedded in the beams. When the finish coat 12 is applied, the loops 10 are firmly embedded therein and so strongly tie the finish coat to the preformed slabs that it may be figured as part of the beams.

The slabs are also formed with recessed ends and corners 13 forming dovetailed grooves 15 into which the finish extends so as to interlock therewith. Reinforcing rods R are placed in these grooves. The rods extend both longitudinally and transversely of the slabs and tie the entire structure together. The beams 2 are protected by utilizing L-shaped pre-cast sections 16, as shown in detail in Figure 4, each of the sections cooperating with one side of the beam and a portion of the bottom. The sections have wires 17 embedded therein, the ends of which are twisted together, as indicated at 18, to hold the sections against displacement. The sections have incorporated therein hangers 19 which overlie the top flange of each of the beams and support the sections. The hangers 19 will have a width such that they may lie in the space between the flanges 4 of the respective slabs.

The slabs are each provided with a metallic flap 20 which during shipment is bent back to the position shown in dotted lines in Figure 4. After the pre-cast units forming the structure have been put in place, the flaps 20 are bent down to the position shown in solid lines in Figure 4 so as to close off the spaces betwen the flanges of the several slabs. When the finish coat 12 is poured, it runs down into the space between the flaps 20 of abutting slabs, shown in Figure 4, and fills the space between the top of the metallic beams 2 and the bottoms of the slab bodies 3. The adjacent ends of the beams are spaced apart a sufficient distance to permit of the cement flowing downwardly to this space. When this portion of the cement sets, it provides additional bearing surface for the slabs on the beams 2, and in addition completely surrounds the upper ends of the wires 17 and the hangers 19.

Each of the projections 5 is provided with a wire 21 which extends downwardly. Metal lath 22 may be secured in place by pressing it upwardly against the wires 21 so that their free ends project through the openings in the lath. The wires 21 are then bent over as shown in Figure 4 so as to hold the lath in place ready to receive plaster 23. The plaster extends around the sections 16 and into the opening between such sections at their bottom portions, thus giving a complete finish for the ceiling and surrounding the lower twisted ends 18 of the wires 17.

Reinforcing rods 24 are provided in each of the flanges 4 of the pre-cast slabs. These reinforcing rods are bent upwardly so as to project into the end portions 7 over the beams.

While I have illustrated and described the present preferred form of my invention, it will be understood that it is not limited to this form alone, but may be otherwise embodied within the scope of the following claims:—

I claim:—

1. A floor structure comprising a beam, a recessed slab overlying the beam, and a flap lying crosswise of the recess so as to define the end of a cement receiving space between the beam and the top portion of the slab.

2. In combination, spaced beams, a floor carried by said beams comprising abutting reinforced precast concrete planks having registering recesses in the ends thereof over the beams and having tie members projecting therefrom, said planks and the beams exclusively constituting a wet concrete receiving form, reinforcing members in the recesses and a cast-in-place concrete finishing coat covering the planks and the tie members.

3. In combination, spaced I-beams, concrete L-members enclosing the sides and bottom of the I-beams, said members having metal tie wires extending from the ends thereof tied together, abutting precast reinforced concrete planks extending between the beams, said planks having recesses in the ends thereof constituting, with the tops of the I-beams and the L-members, a permanent wet concrete receiving form, and a cast in place concrete floor cover on said planks, the concrete of which extends into the form and bonds the planks, the L-members and the I-beams together.

4. A floor comprising a plurality of precast slabs extending between supporting beams and so positioned as to leave recesses

between their adjacent ends, tie means projecting from the top surface of the slabs, reinforcing rods in the recesses and a cementitious coat extending over the slabs and into the recesses so as to embed the tie means and the reinforcing rods.

In testimony whereof I have hereunto set my hand.

ALBERT HENDERSON.