(No Model.)

W. CHARTERS.

CRANK SHAFT AND SPROCKET WHEEL CONNECTION THEREFOR.

No. 590,430. Patented Sept. 21, 1897.

Fig. 1.

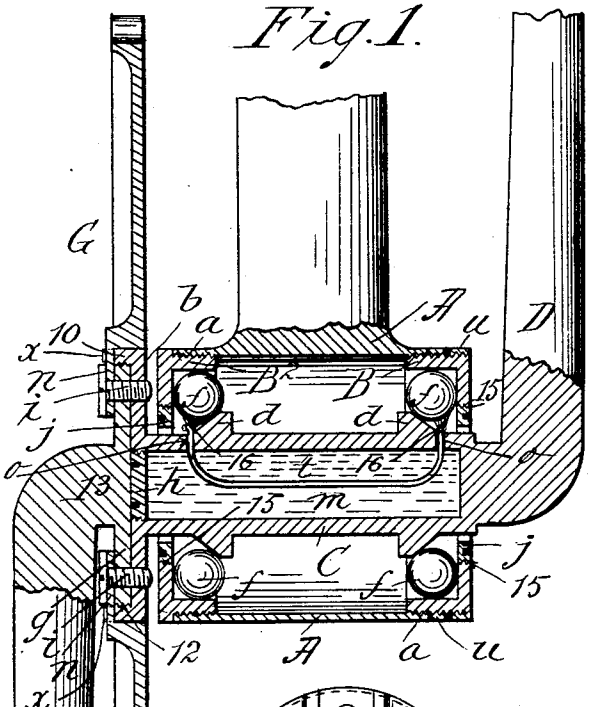

Fig. 4.

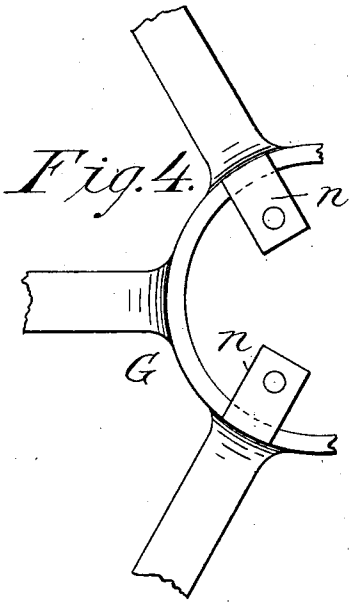

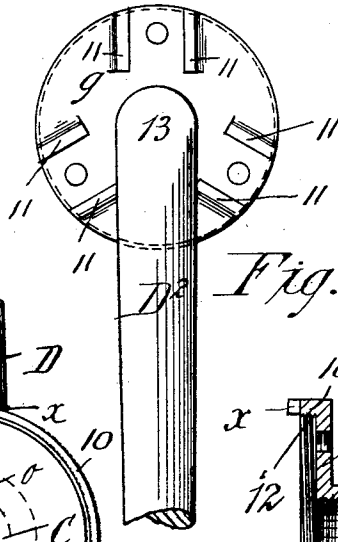

Fig. 3.

Fig. 5.

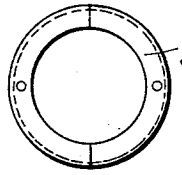

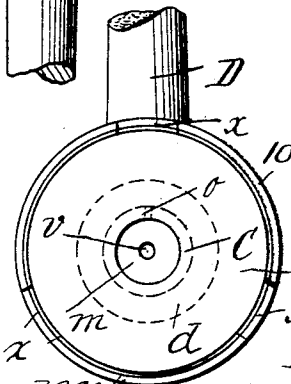

Fig. 6.

Fig. 2.

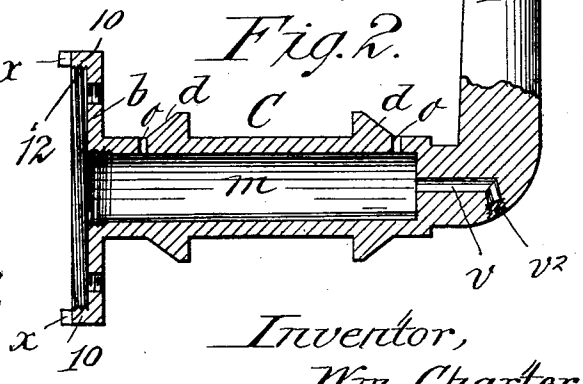

Witnesses:

M. A. Campbell

N. M. Bellows.

Inventor,

Wm. Charters,

by Wm. C. Bellows

Attorney.

THE NORRIS PETERS CO., PHOTO-LITHO., WASHINGTON, D. C.

UNITED STATES PATENT OFFICE.

WILLIAM CHARTERS, OF SPRINGFIELD, MASSACHUSETTS.

CRANK-SHAFT AND SPROCKET-WHEEL CONNECTION THEREFOR.

SPECIFICATION forming part of Letters Patent No. 590,430, dated September 21, 1897.

Application filed February 11, 1897. Serial No. 622,901. (No model.)

To all whom it may concern:

Be it known that I, WILLIAM CHARTERS, a citizen of the United States of America, and a resident of Springfield, in the county of Hampden and State of Massachusetts, have invented certain new and useful Improvements in Crank-Shafts and Sprocket-Wheel Connections Therefor, of which the following is a specification.

This invention relates to an improved construction of a crank-shaft and the equipments therefor and the combination therewith of conjunctive parts, as the cranks and a sprocket-wheel, the mechanism and parts being advantageously available in bicycles and analogous vehicles and machines.

The objects of the invention are to provide a novel mechanism of the character indicated which shall be simple, inexpensive, and practicable, easy of assemblage, and easily taken apart for cleaning, repair, or replacement of any part, and which mechanism, while susceptible of being made very light, is also extremely strong and secure against derangement or distortion in use.

The invention consists in the constructions and combinations of parts, all substantially as will hereinafter fully appear, and be set forth in the claims.

Reference is to be had to the accompanying drawings, in which—

Figure 1 is substantially a central sectional view through the crank-shaft bracket, the crank-shaft, cranks, sprocket-wheel, and ball-bearing parts of a bicycle. Fig. 2 is a detail view showing the peculiarly-constructed crank-shaft and one crank integral therewith. Fig. 3 is a view of the other crank constructed in a special way to be united with the crank-shaft. Fig. 4 is an outer face view of the middle portion of the sprocket-wheel. Fig. 5 is a face view of a split nut to be hereinafter referred to. Fig. 6 is a front view of Fig. 2.

Similar characters of reference indicate corresponding parts in all the views.

In the drawings, A represents the crank-shaft hanger or bracket, which is in the form of a cylindrical shell internally screw-threaded at both its ends, as at *a*, receiving therein the annular ball-cases B B^2, which are externally screw-threaded.

C represents the crank-shaft, having at one end the integrally-formed crank D and provided at its other end with the outwardly-extending circular flange *b*, which is in the form of an outwardly-opening shallow cup, the circular wall 10 of the cup being internally threaded, as seen at 12. The said wall 10 has at its edge the seats or sockets *x x*. The crank-shaft has formed or affixed thereon in a usual way the cones *d d*, between which and the ball-cases B B^2 are the balls *f*.

The second crank D^2 has on its inturned inner portion 13 the circular flange *g*, which is threaded on its edge to screw into the cup-flange of the crank-shaft, said flange having the paired face ribs or lugs 11 11.

G represents the sprocket-wheel, the central or hub opening in which is of a diameter to closely fit about the periphery of the aforesaid cup-flange of the crank-shaft. The sprocket-wheel has at its hub, at its outer side, portions *n*, preferably in the form of lugs, as shown, which extend in radial arrangement inwardly over the face of the crank-flange *g*, and the screws or bolts *i i* are passed through these lugs *h* and the flange members *g* and *b* of the crank D^2 and crank-shaft C. Said projections *n n* engage between the ribs or lugs 11 on the crank-flange *g* and also in the seats *x* in the wall 10 of crank-flange *b*.

The circular openings 15 in the annular ball-cases are sufficiently wide to permit the crank D to be passed through the crank-shaft bracket when the ball-cases are in place.

The externally-threaded rings *j j* are split, as seen in Fig. 5, so as to be brought to their place, screwing into the ball-cases and closely encircling the crank-shaft.

The crank-shaft, from its cup-flanged end, is drilled or chambered, as seen at *m*, to constitute an oil-reservoir, and has the screw plug or cap *h*, which closes the outer end of this reservoir-chamber and which when removed permits the entrance of oil. Outside of the cones the crank-shaft has the rather small perforations *o o*. A capillary cord *t* is contained in the oil-reservoir *m*, its end portions protruding outwardly through and beyond the perforations *o o*, being knotted, as indicated at 16 16, to prevent the wick-cord extremities from being drawn inwardly, and also that the portions of the wick-cord com-

prised in or outside of the knots will bear on and supply oil to the balls.

Both sets of ball-bearings are adjusted by properly turning the right-hand ball-case, which screw-engages in the end of the bracket, and the bearings are maintained locked in their adjustment by the sleeve-nut *u*, which screws onto the threaded outer end portion of the ball-case, which protrudes outwardly beyond the end of the bracket and is brought to a hard seat against the bracket end.

It is preferable to employ the screw-plug *h* to close the end of the oil-chamber in the crank-shaft, but this is not absolutely necessary because the end of this chamber will be closed by the circular flange on the inturned end of the removable crank, which flange screws into the cup-flange of the crank-shaft which surrounds the mouth of the oil-chamber, but the employment of the screw-plug is preferable, as it increases the security against oil leakage and obviates the necessity of exercising care in assembling the parts after the oil-chamber has been filled.

In order to provide a construction which will permit the entrance of oil into the oil-chamber *m* without removing the crank D^2 and sprocket-wheel, a duct *v* is provided leading through the stock which constitutes the junction between the crank D and the crank-shaft C, which is closed by the removable screw-plug v^2.

Having now described my invention, what I desire to secure by Letters Patent is—

1. The combination with the cylindrical bracket or support having ball-cases, of the cone-provided crank-shaft, equipped at one end with a crank, and having its other end formed with the cup-flange, and the second crank provided at its inner inturned end with the circular flange, set in said cup-flange of the crank-shaft, the sprocket-wheel having its apertured middle portion fitted about the crank-shaft cup-flange and having the inwardly-projecting portions which overlie the face of said circular crank-flange, the screws which pass through said inwardly-projecting portions of the sprocket-wheel, and both the crank and crank-shaft flanges, and the balls, substantially as described.

2. The combination with the cylindrical bracket or support having ball-cases, of the crank-shaft, having the cones, equipped at one end with a crank, having its other end formed with the cup-flange, and having the chamber, opening to said cup-flanged end with perforations leading through the wall of said chamber, and the second crank having its inner end inturned and provided with the circular flange which is set in and removably screw-connected with said cup-flange of the crank-shaft, and the balls, substantially as described.

3. The combination with the crank-shaft having the cup-flange *b* with the seats *x* of the crank D^2 having on its inturned end the flange *g*, provided with the paired lugs 11, 11, the sprocket-wheel having the projections *n n* adapted to have engagement in said seats *x* and between said lugs 11, 11, and means for confining the sprocket-wheel and flanged parts together, substantially as described.

4. The combination with the crank-shaft having the cup-flange *b*, of the crank D^2 having on its inturned end the flange *g* constructed to screw into the cup-flange and provided with the paired lugs or lips 11, 11, the sprocket-wheel having the projections *n n* engaging between said lips 11, and means for confining the sprocket-wheel against disengagement, substantially as described.

In testimony that I claim the foregoing as my invention I have signed my name in presence of two witnesses.

WILLIAM CHARTERS.

Witnesses:
WM. S. BELLOWS,
M. A. CAMPBELL.