Oct. 17, 1967 U. M. LESKINEN 3,346,991

GREENHOUSE

Filed Nov. 15, 1965 3 Sheets-Sheet 1

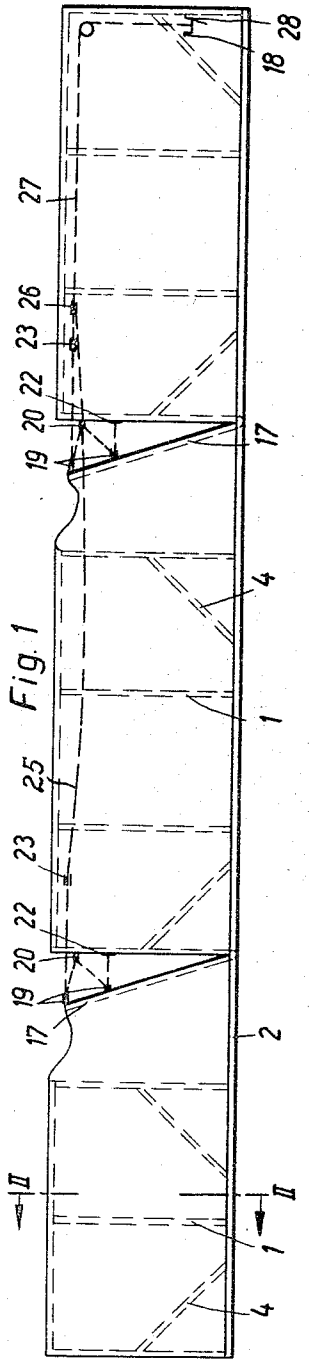

Fig. 1

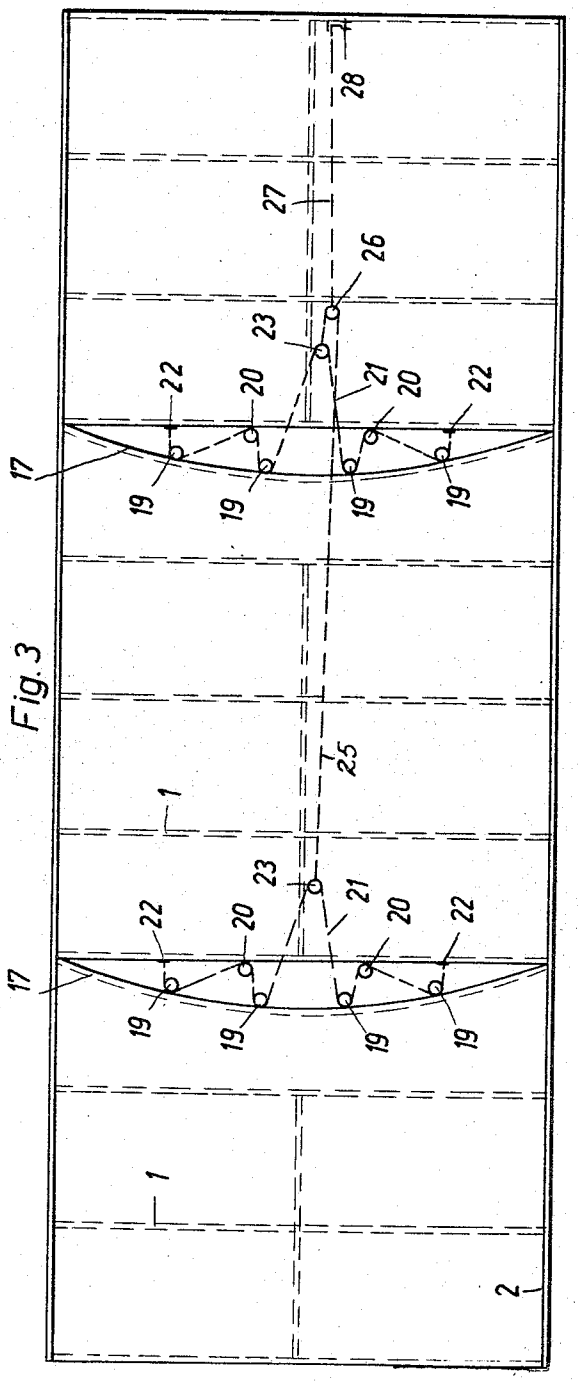

Fig. 3

Oct. 17, 1967 U. M. LESKINEN 3,346,991

GREENHOUSE

Filed Nov. 15, 1965 3 Sheets-Sheet 2

Fig. 2

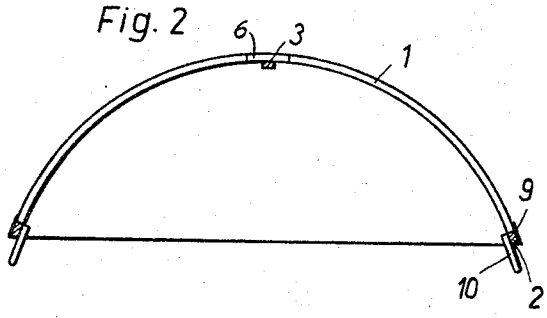

Fig. 4

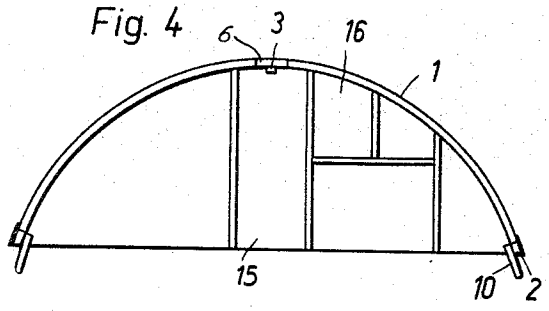

Fig. 9

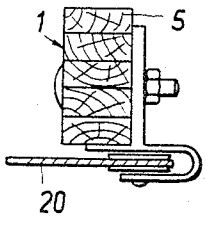

Fig. 10

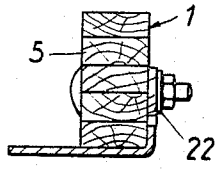

Fig. 11

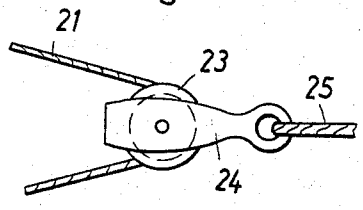

Oct. 17, 1967 U. M. LESKINEN 3,346,991
GREENHOUSE
Filed Nov. 15, 1965 3 Sheets-Sheet 3

Fig. 7

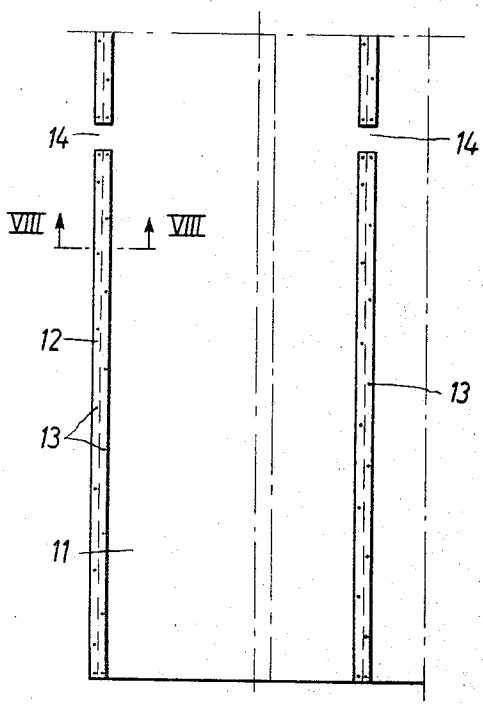

Fig. 8

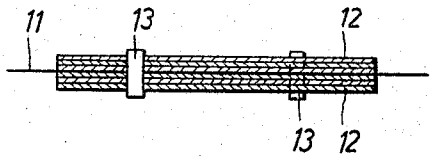

Fig. 6

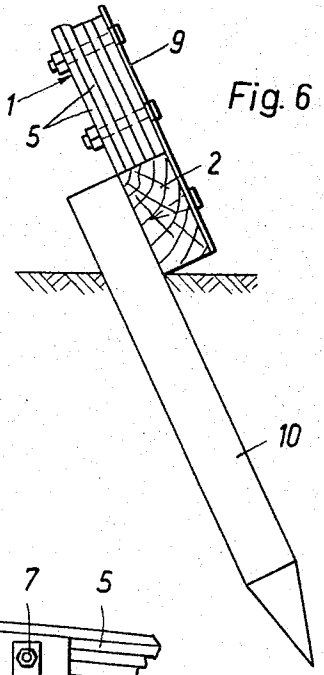

Fig. 5

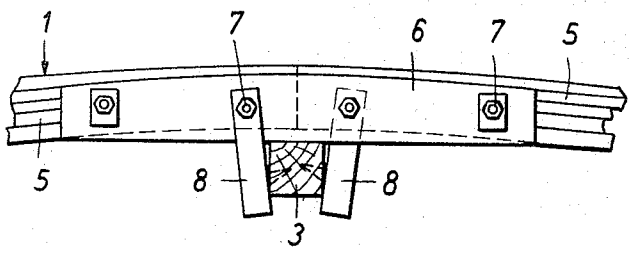

United States Patent Office 3,346,991
Patented Oct. 17, 1967

3,346,991

GREENHOUSE

Usko Mikael Leskinen, Alkutie 69A, Helsinki, Finland

Filed Nov. 15, 1965, Ser. No. 507,842
7 Claims. (Cl. 47—29)

The invention refers to a greenhouse composed of supporting arches located at a distance from each other, the lower ends of which arches being fastened to lower wooden beams for the walls and the upper ends being joined by a ridge-pole, a wall and roof construction of plastic sheet material, including gables and doors, arranged on the supporting arches.

In previously known greenhouses of this type the supporting arches consist of either metal or wood and the plastic sheets are either drawn over without attachment to the arches, or are fastened to the arches by means of yarns or cables, both of which procedures cause rapid wear by friction or brittleness at points where the plastic is exposed to the sun and the plastic sheet or membrane is supported by wood or iron. These disadvantages have been least apparent in such previously known plastic houses or greenhouses, where the plastic membrane is fixed to the arches or the frames by nailing a wooden list over the seam. However, in order to obtain efficient nailing this has to be very dense and makes fastening of the plastic membrane as well as its removal for replacement a very laborious task.

The invention seeks to eliminate the disadvantages presented above and is mainly characterized in that the arches are made by gluing together wooden lamina, and that the wall and roof construction consists of a plastic membrane, which is provided in advance with ribbons running transversely with respect to the house, located at a distance from each other in the longitudinal direction equal to the distance between the supporting arches, and which are fastened to the arches, e.g., by means of nails, preferably before fixing the arches and stretching the intermediate space between the arches.

According to the invention many major advantages are obtained as compared to previously known greenhouses. Thus, for instance, the plastic membrane when in place is unable to move relative to the supporting arch and is therefore not subject to wear. Furthermore, the plastic membrane including ribbons is easy to fasten and to detach in one piece, e.g., in order to replace the plastic. A further advantage is that the greenhouse can be assembled for storage or for change of location without detachment of the plastic cover. This is done by dismounting the ridge-pole from the arches by knocking off the hook irons and detaching the lower ends of the arches including the plastic cover from the lower beam of the wall, so that the greenhouse can be assembled in the manner of a bow net and bound into bundles.

Other details, objects and advantages of the invention are clarified further below and in the enclosed drawings, in which:

FIG. 1 presents schematically from the side a greenhouse according to this invention,

FIG. 2 is a section taken on the line II—II in FIG. 1,

FIG. 3 illustrates a greenhouse according to FIG. 1 from above,

FIG. 4 illustrates a greenhouse according to FIG. 1–3 from the end,

FIG. 5 is an enlarged view of the seam of both halves of the arch from the front, and

FIG. 6 is an enlarged view of the seam between the supporting arch, the lower wooden beam, and a pile driven into the ground,

FIG. 7 presents a plastic-membrane section with ribbons of plywood from above before attachment,

FIG. 8 is an enlarged view in section of the joint between two adjacent plastic sheets,

FIG. 9–11 are enlarged views of details from FIG. 3.

The frame of the greenhouse, according to the FIGURES 1–4, is made up of transverse supporting arches, or arches **1**, at a suitable distance from each other in the longitudinal direction, lower wooden beams **2** on both sides extending over the entire length of the house, a ridge-pole **3** connecting the arches to each other longitudinally, as well as diagonal supports **4** for the arches secured to the arches and the lower beams.

The arches **1** are assembled from two identical halves. As most clearly indicated in the FIGURES 5, 6, 9, and 10, these halves are made up of several impregnated wooden lamina **5** on top of each other which are pressure-glued and bent to form an arch, preferably of circular shape. The upper ends of both halves of the arch are fixed to each other by means of connecting irons **6** and bolts **7**. The ridge-pole **3** situated underneath the arches is fixed to position by means of irons **8**, suspended by the upper ends from two bolts **7** situated near the centre on different sides of the arch **1**, or on the same side. The ridge-pole is fixed by engaging the irons **8** with the pole, so that the clasps (not shown) provided on the irons hook into the wood. A connecting iron **9** is fixed with bolts to each lower end of the arches and fixes also the arch to the lower beam **2**, for instance, by means of deck screws. The lower beams **2** extending along the sides of the greenhouse over its entire length are fixed to the surface of piles **10**, for instance, by means of nails or iron links, which at the same time provide the joint location for the extended lower beam. The piles are driven into the ground in the direction of the lower end of the arch **1**.

The plastic covering used for the greenhouse consists of plastic sheet elements **11** as shown in FIGS. 7 and 8. These are made to desired length by connecting to each other a sufficient number of plastic sheets of suitable width side by side, the length of which sheets correspond to the peripheral length of the arches **1**.

The plastic sheets are joined together along their seams, according to FIGS. 7 and 8, by using lists or ribs **12** arranged on both sides of the sheets. The lists are tacked to each other mechanically with tacks **13**, at which the edges of the plastic sheets are fixed between the lists. These edges may also be bent double. This method of seaming and fixing can be generally applied for soft and hard plastic membranes. If necessary, glue may be used additionally, but if tacking is sufficiently dense, e.g. 5 cm. between tacks, even a slippery sheet is kept well fixed. When soft plastic membranes are used a small space **14** is left between successive ends of lists **12** with respect to the direction of the seam for a purpose to be explained further below. The distance between adjacent lists **12** determines the distance between the arches of the greenhouse, i.e. in this case the arches **1** will be at a distance from each other corresponding to the width of the plastic sheet. If the sheet of plastic is wide, e.g. 5 cm., the space between the arches **1** will be too large. In a case like this one can proceed in such a way, that one or more lists **12** are fastened also between two seam locations on the plastic covering in the same manner and parallel to the lists at the seam locations, at which the distance between the arches correspond to the distance between adjacent lists. Because the polythene plastic sheets due to the method of manufacture usually have a fold running in the longitudinal direction of the plastic sheet, which fold is weaker than other points of the sheet, a list **12** may also be placed on the fold mentioned. Naturally, also the two opposite edges of the plastic sheet or element running parallel to the lists are provided with lists.

The width of the lists **12** preferably equals the width of the arches **1**. In the case presented the lists **12** are made of thin plywood, e.g. aeroplane or boat plywood, but naturally also other material may be used, such as plastics or corresponding material.

The plastic material may be transparent or entirely or partly opaque, at which the room naturally can be used for other purposes than a greenhouse. In winter special plastics which do not conduct, heat may be used. Such materials are comparable to glass with respect to heat and light characteristics and they are long lasting and strong.

When a sufficient number of plastic sheets provided with lists **12** in the described manner are connected to each other to form an element, this element can be folded at points between successive ends of the lists **12**, as at spaces **14**, into layers on top of one another, whereupon the element can be rolled up for transportation to the site of construction. The next step is then to unroll the plastic element, to spread it out and to roll it once more, but in the direction of the lists, to form a long roller used in erecting the greenhouse. Before actual erection the plastic element is fixed in advance by the lists to the arches, e.g. by sparse nailing, so that the stacked-up construction somewhat like a bow net is obtained. This bow net can now be stretched one intermediate space at a time by fixing first the lower ends of the arches to the lower beam supports, upon which the arches are bound or joined to each other by means of the ridge-pole. In this manner, stretching of the plastic element by means of the arches is even and fast. Hereafter the lower edge of the element is nailed to the lower beam **2** using separate lists preferably of plywood.

When the gables or end walls are fixed into position the greenhouse is ready. One or both gables may have the construction presented in FIG. 4 comprising a door **15** and air openings **16**. Naturally, the gables may have several doors, or one larger door, allowing vehicles to be driven into the greenhouse.

If the greenhouse according to the invention is constructed very long, the air openings **16** provided in the gables won't suffice to get enough ventilation. Thus, air openings are provided also along the greenhouse at suitable distances from each other. For this purpose additional arches **17** are provided beside the regular arches **1** rigidly fixed to the lower supporting beam, which are fixed to the lower beam by means of hinges, and thus are capable of being swung to the position shown in FIGS. 1 and 3, including corresponding plastic membranes fixed to the additional arch. In order to facilitate the swinging of this additional arch a special system of wires is provided which is operated by means of a crank **18**. Both additional arches **17** in the figures are provided with two pulleys **19** fastened at distances on both sides of the transverse centre lines thereof and likewise the adjacent regular arches are provided on both sides of their transverse centre lines with one pulley **20** presented in detail in FIG. 9. The wires **21**, the ends of which are fastened to the stationary arches **1** at points **22** (FIGS. 3 and 10), are run over the pulleys **19**, **20** and **19** around a suspended pulley **23** and back over the pulleys **19**, **20** and **19** situated on the other side of the centre line of the arches **17** to the point **22**, where they are fixed to the respective regular arches **1**. As clearly indicated in FIG. 11 a wire **25** attached to the holder **24** of the pulley **23**, to the left in FIGURES 1 and 3, is run around a suspended pulley **26** and is fixed to the holder **24** of the suspended pulley **23** to the right in FIGURES 1 and 3. A wire **27** is run from the holder of the pulley **26** to a reel **28** rotated manually by a crank **18**. The air openings mentioned are opened by releasing wire **27** from the reel **28**, at which the tension of the membrane is relaxed and the opening opens automatically. If required, the opening action may be improved, for instance, by means of a spring arrangement, rubber or a weight. Thus, when opened, the arches **17** take the

positions presented in the FIGURES 1 and 3. In the corresponding manner the air openings are closed by winding the wire **27** on the reel **28** by means of the crank **18**. The adjacent regular arches **1** of the air openings as well as the gables constitute natural breaking points when the house is dismounted for transport and winter storage.

The greenhouse according to the invention can be used for growing and taking care of all kinds of plants and seedlings, but it is particularly adapted to the production of wood plants. If the greenhouse is not used all year round, it is assembled for winter storage in the autumn, or when the winter is setting in and is erected again in the spring. This operation takes only a few hours' time in all. Because the qualities of many plastics are weakened under the influence of sunlight, winter storage increases the life of the plastic. Therefore, the frame does not necessarily have to be dimensioned to stand the pressure of snow. The greenhouse according to the invention can well stand blowing winds. Thus, it is found that a greenhouse with free plastic surfaces up to as large as 50 $cm.^2$, between two arches is well able to stand even storms.

Naturally, the invention is not restricted to the working example presented above, but it can be varied considerably with respect to details within the scope of the invention. Thus, for example, rods of plastic provided with sheath extensions can be used between the arches instead of the wooden ridge-pole.

I claim:

1. A greenhouse comprising: a pair of oppositely disposed, spaced-apart, longitudinally extending ground beams, a plurality of upstanding, longitudinally spaced-apart supporting arches arranged transversely of said beams and being fastened at their lower ends thereto, a ridge pole joining the top portions of said arches together, a plastic membrane covering said arches for forming a roof and side walls for said greenhouse, and a plurality of transversely extending, longitudinally spaced apart pairs of superimposed lists of substantially the same width as said arches fixed to said membrane and being secured to said arches, said membrane being sandwiched between each of said pairs of lists and being spaced from said arches, said pairs of lists being all of substantially equal length and being arranged on said membrane in transversely extending, longitudinally spaced rows with respect to said greenhouse, each of said rows including a plurality of successively spaced-apart pairs of lists and corresponding approximately to the peripheral length of each of said arches, said successive spaces between said lists in each of said transverse rows being in alinement longitudinally of said greenhouse with the spaces between successive lists of adjacent rows thereof, thereby enabling said membrane to be folded longitudinally between said successively spaced lists whereby said membrane may be folded and subsequently rolled transversely into a compact bundle for ease in handling.

2. A greenhouse as in claim **1**, characterized in that the lists concerned are made of plywood.

3. A greenhouse as in claim **1**, characterized in that at least one transversely placed air opening of adjustable size is provided in said walls and roof of said greenhouse.

4. A greenhouse as in claim **3**, characterized in that said supporting arches are rigidly connected to said ground beam, and an additional arch is provided closely adjacent one of said supporting arches and is hingedly connected at its lower ends to said beam, said plastic membrane is secured to said additional arch and said membrane is separatable between said additional arch and said adjacent supporting arch, means on said arches for swinging said additional arch away from said supporting arch together with a portion of said plastic membrane, whereby an air opening is obtained between said additional arch and said supporting arch.

5. A greenhouse as in claim **4**, characterized in that after detachment of the ridge-pole and the beams, the arches including the plastic membrane are adapted to

be assembled into bundles in the manner of a bow net for ease in handling the greenhouse.

6. The greenhouse as in claim 1, characterized in that said membrane is formed of a plurality of strips of plastic sheet material, each strip having a length approximately equal to the peripheral length of said arches and a width at least as wide as the distance between adjacent arches, said strips being joined together along their lengthwise edges by said pairs of lists.

7. A greenhouse comprising: a pair of oppositely disposed, spaced-apart longitudinally extending ground beams, a plurality of upstanding, longitudinally spaced-apart supporting arches arranged transversely of said beams and being rigidly connected at their lower ends thereto, a ridge pole joining the top portions of said arches together, a plastic membrane covering said arches for forming a roof and side walls for said greenhouse, a plurality of transversely extending, longitudinally spaced-apart pairs of superimposed lists fixed to said membrane and being secured to said arches, said membrane being sandwiched between each of said pair of lists, an additional arch being provided closely adjacent one of said supporting arches and being hingedly connected at its lower ends to said beams, said plastic membrane being secured to said additional arch and said membrane being separatable between said additional arch and said adjacent supporting arch, means on said arches for swinging said additional arch away from said supporting arch togeher with a portion of said plastic membrane, whereby an air opening is obtained between said additional arch and said supporting arch, said arch swinging means including two pulleys attached to said additional arch on

both sides of its transverse center line, one pulley attached to the adjacent stationary arch on both sides of its center line, a wire arranged to run from a point of attachment on said stationary arch over the second pulley of said additional arch counted from its center line, then over the pulley of said stationary arch and the pulley of said additional arch closer to the center line thereof, and from here around a suspended pulley provided with a holder back over the corresponding pulleys and to a corresponding point of attachment on the other side of the center line, and a second wire connected to said suspended pulley holder arranged to be wound on a reel, so that said additional arch, on unwinding said second wire from said reel, is caused to swing to an open position on account of its weight and the tension of said plastic membrane and which, after winding said second wire, is caused to swing beside said adjacent stationary arch for closing said air opening.

References Cited

UNITED STATES PATENTS

1,289,074	12/1918	Armagost	49—104
1,410,036	3/1922	Scherler et al.	49—104 X
3,028,872	4/1962	Cresswell	47—17
3,103,764	9/1963	Heuer	47—29

FOREIGN PATENTS

41,522	3/1910	Austria.

ABRAHAM G. STONE, *Primary Examiner.*

P. A. RAZZANO, *Assistant Examiner.*