Sept. 13, 1938. A. LEIB 2,129,852

ANTENNA FOR AN AIRPLANE WITH A METALLIC BODY

Filed Feb. 1, 1935

Fig. 1

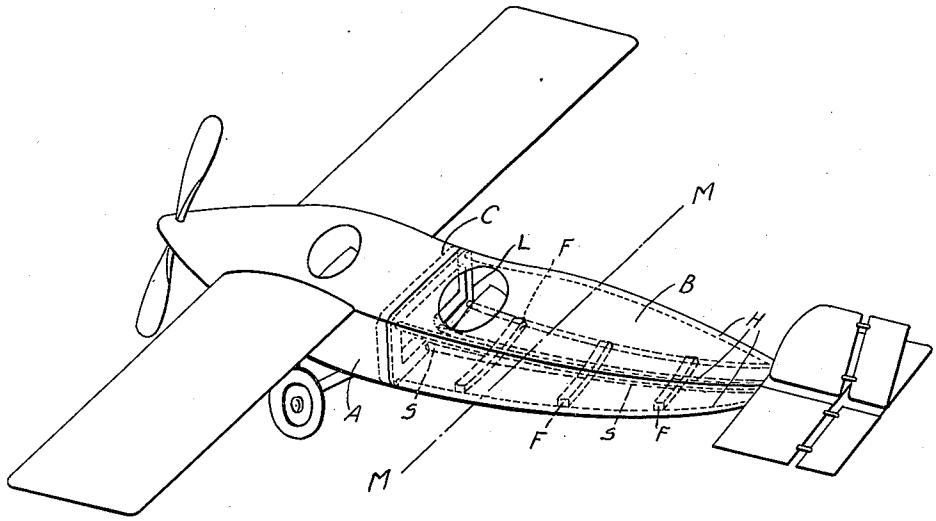

Fig. 2

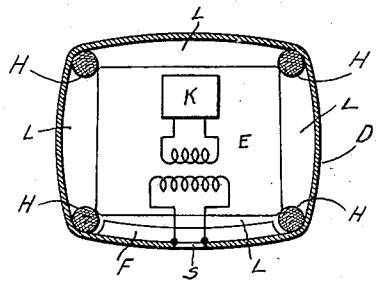

INVENTOR.
AUGUST LEIB

BY W. S. Grover

ATTORNEY.

Patented Sept. 13, 1938 2,129,852

UNITED STATES PATENT OFFICE

2,129,852

ANTENNA FOR AN AIRPLANE WITH A METALLIC BODY

August Leib, Berlin, Germany, assignor to Telefunken Gesellschaft für Drahtlose Telegraphie m. b. H., Berlin, Germany, a corporation of Germany

Application February 1, 1935, Serial No. 4,465
In Germany January 3, 1934

5 Claims. (Cl. 250—33)

This invention relates to an antenna for an airplane having a metallic body. It has been suggested in the earlier art (German Patent No. 232,332) to utilize parts of an airplane itself for the purposes of reception and transmission of electromagnetic waves in order that a distinct antenna may be dispensed with and that air resistance may thus be diminished. What was concerned in the said earlier disclosure was a type of airplane the main surfaces of which consisted of canvass upon which, according of the above German patent, metal foil was to be fixed at suitable places.

Now, in the case of a metallic airplane such a method would be impracticable. While it is true that the metallic body of the airplane could be mechanically caused to oscillate as a dipole, this would primarily be possible only when used to transmit or receive signals at its own natural period or wave-length. Also the attempt to insure coil or loop antenna action of adequate intensity would be attended with some difficulties.

Now, according to the present invention these difficulties could be obviated by that the metallic body of the airplane is electrically subdivided.

This invention will be better understood by referring to the accompanying drawing, in which

Fig. 1 is a perspective view of an airplane;

Fig. 2 is a section through the airplane body, the section being taken on line M—M.

Such an electric subdivision of the metallic fuselage at right angles to the longitudinal axis thereof is shown in Fig. 1. The two halves of metal A and B of the fuselage are firmly united mechanically at the place marked C by a sufficiently strong wooden construction member L, providing electrical separation or insulation of the two metallic parts. This insulation may be accomplished by the fact that the longérons of the fuselage as well as the frame member or panels connecting them at C are made of wood.

In order that a satisfactory loop antenna effect may be secured, it is moreover recommendable to electrically subdivide the entire metal fuselage or rear part thereof to be used as an antenna by means of an oblong slot, the joints or edges of which could be united in that case by means of suitable solid insulators, e. g., also timber. Such a slot in the metallic portion is shown by S in the drawing in the posterior end B of the metallic fuselage.

Fig. 2 shows schematically a cross-section of the fuselage section to be employed as a loop antenna taken on the line marked M—M, of Fig. 1. H denotes the wooden longérons here passing through the corners. D are metallic panels or covers. S is a slot, F a reinforcing rib of timber. Connected with the edges of the said slot S is a coupling coil E which is adapted to be associated with a radio apparatus K which may be a transmitter or a receiver.

I claim:

1. In an antenna system for aircraft comprising an airplane having a metallic body, an antenna formed from substantially the rear half portion of said metallic body whose cross-section forms a loop, an insulating member electrically subdividing substantially the rear half of the metallic body from the other half, said rear half portion of the metallic body having a longitudinal slot located at right angles to said insulating member.

2. A loop antenna for an aircraft having a metallic body comprising a loop formed from the posterior half of said metallic body by substantially dividing said metallic body in the central portion thereof by an insulating member which electrically subdivides the posterior half from the other half of said metallic body, and a slot extending along the entire length of said posterior half of said aircraft body and located at right angles to said insulating member.

3. A loop antenna for an aircraft having a metallic body comprising a loop formed from the posterior half of said metallic body by substantially dividing said metallic body in the central portion thereof by an insulating frame member which electrically subdivides the posterior half from the other half of said metallic body, a slot extendng along the entire length of said posterior half of said aircraft body and located at right angles to said insulating frame member, and an insulating rib member to reinforce the slotted portion of said body.

4. A loop antenna for an aircraft having a metallic body comprising a loop formed from the posterior half of said metallic body by substantially dividing said metallic body in the central portion thereof by an insulating member which electrically subdivides the posterior half from the other half of said metallic body, a slot extending along the entire length of said posterior half of said aircraft body and located at right angles to said insulating member, and coupling means comprising a coil for coupling said loop antenna to radio apparatus.

5. In an antenna system for an airplane having a substantially all-metal fuselage having a cross-section in the shape of a loop, a loop antenna formed by a portion of said metallic fuselage, said metallic fuselage being electrically subdivided by a lateral cross-section of insulating material, and the perimetrical continuity being broken by a longitudinal slot located at right angles to said insulating material

AUGUST LEIB.