March 9, 1937. L. E. ZERBE 2,072,936

ROTARY MACHINE

Filed March 22, 1935 2 Sheets-Sheet 1

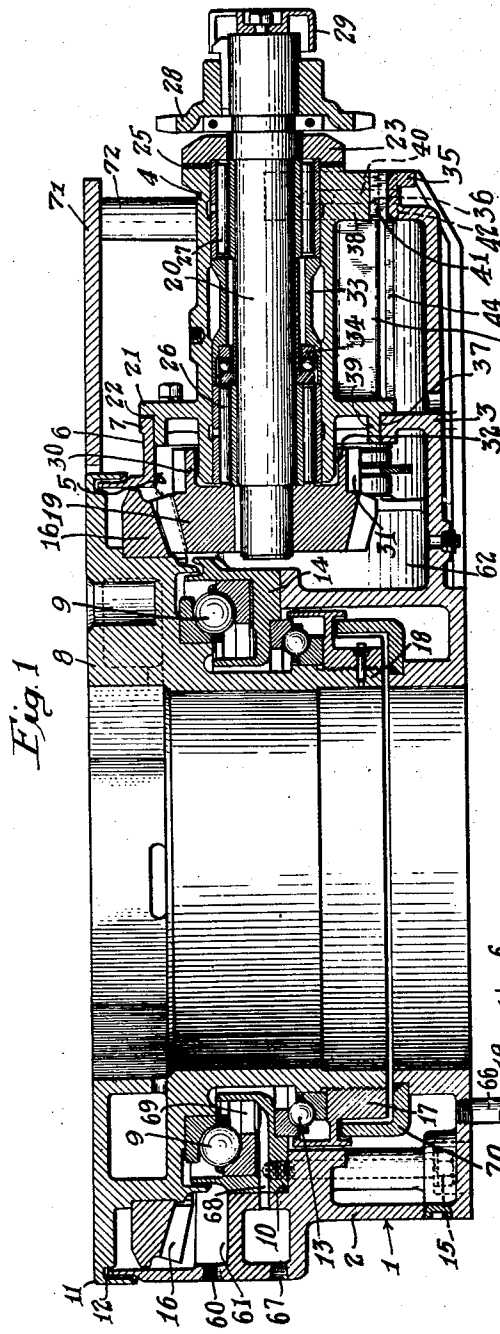

Fig. 1

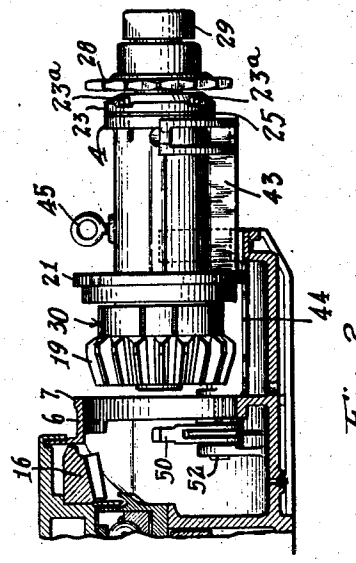

Fig. 2

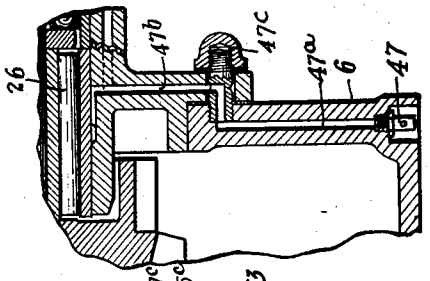

Fig. 8

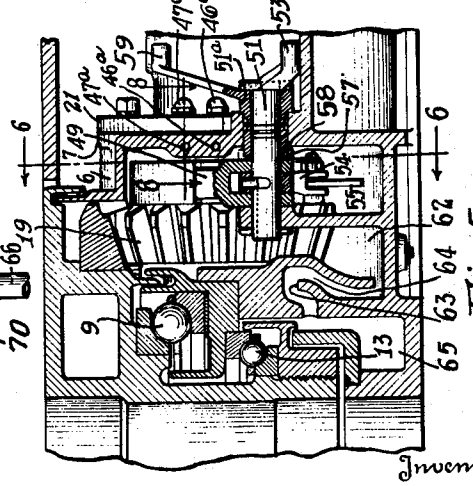

Fig. 5

Inventor

Lewis E. Zerbe

By Lyon & Lyon

Attorneys

March 9, 1937. L. E. ZERBE 2,072,936

ROTARY MACHINE

Filed March 22, 1935 2 Sheets-Sheet 2

Fig. 4

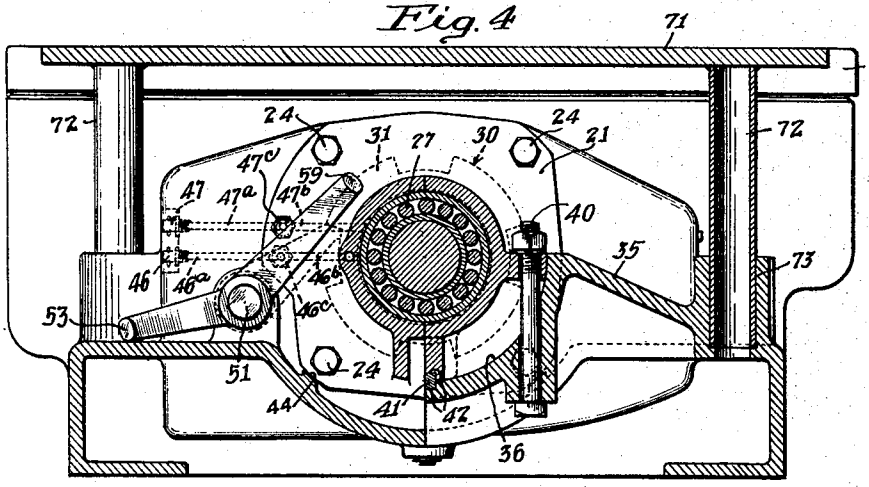

Fig. 6

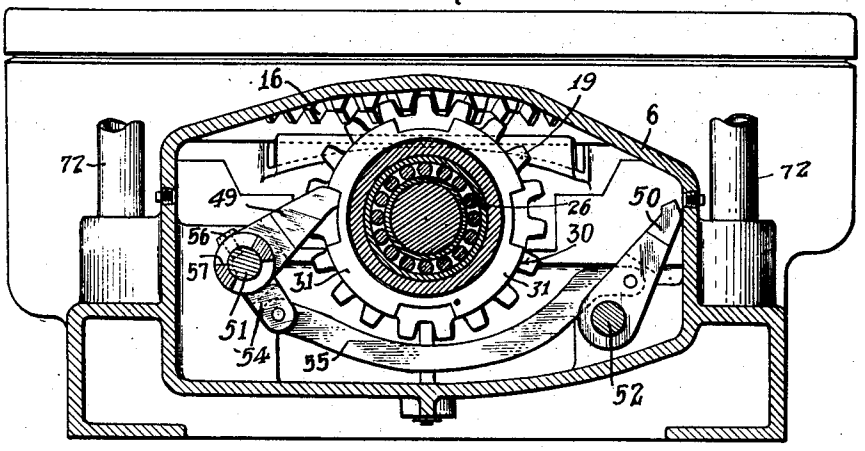

Fig. 3

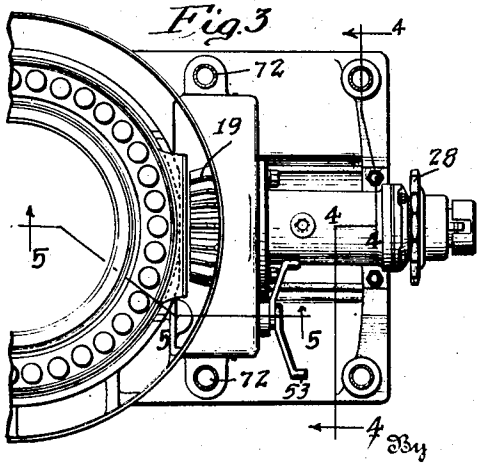

Fig. 7

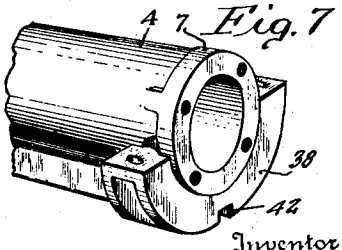

Inventor

Lewis E. Zerbe

By Lyon Lyon

Attorneys

Patented Mar. 9, 1937

2,072,936

UNITED STATES PATENT OFFICE

2,072,936

ROTARY MACHINE

Lewis E. Zerbe, Moneta, Calif., assignor, by mesne assignments, to The National Supply Company of Delaware, Toledo, Ohio, a corporation of Delaware

Application March 22, 1935, Serial No. 12,387

7 Claims. (Cl. 255—23)

This invention relates to rotary machines such as are used in a rotary drilling rig for drilling oil and other wells, and is more particularly related to a rotary machine of the fully enclosed type so constructed as to meet the present demands for the drilling of deep wells. This invention is particularly directed to an improvement over that enclosed rotary machine illustrated in Letters Patent No. 1,976,207, issued October 9, 1934, to Lewis E. Zerbe.

It is an object of this invention to provide a rotary machine so constructed as to provide a unitary pinion shaft assembly which cooperates to form an enclosure for the drive pinion and drive pinion locking means, and in which rotary machine the locking means includes a pair of pivotally mounted lock pawls positioned upon opposite sides of the pinion so as to be actuated selectively by means situated upon the outside of the enclosure and mounted upon a common axis.

Another object of this invention is to provide a rotary machine of the fully enclosed type having an improved form of unitary pinion shaft housing of simplified construction and mounting upon the base of the rotary machine.

Other objects and advantages of this invention it is believed will be apparent from the following detailed description of a preferred embodiment thereof as illustrated in the accompanying drawings.

In the drawings:

Figure 1 is a side elevation principally in vertical mid-section of the rotary machine embodying my invention.

Figure 2 is a fragmental sectional elevation illustrating the pinion shaft assembly as moved outwardly from position with reference to the rotary machine table and base preparatory to lifting the assembly from the rotary table.

Figure 3 is a fragmental top plan view of the rotary machine embodying my invention.

Figure 4 is a sectional elevation taken substantially on the line 4—4—4—4 of Figure 3.

Figure 5 is a fragmental sectional view taken substantially on the line 5—5—5 of Figure 3.

Figure 6 is a sectional elevation taken substantially on the line 6—6 of Figure 5.

Figure 7 is a fragmental perspective view illustrating the sprocket end of the pinion shaft bearing housing.

Figure 8 is a fragmental sectional view taken substantially on the line 8—8 of Figure 5.

In the preferred embodiment of my invention illustrated in the accompanying drawings, 1 indicates the base of a rotary machine, which base includes an upstanding annular wall 2 and an outwardly extending pinion shaft supporting portion 3 formed to provide a support for the pinion shaft assembly housing 4. The upstanding wall of the rotary machine is formed with an opening 5 communicating with the opening formed in the extension 6 of the base 1. The extension 6 terminates with the outwardly facing flange face 7. Mounted within the opening provided through the base 1 is a rotary table 8 which is supported upon the main supporting bearing 9 mounted upon a shoulder 10 formed within the upstanding wall 2. In order to form a complete enclosure between the base 1 and the table 8, the upper flange or rim 11 of the table 8 is provided with a groove 12 into which the upper end of the annular wall 2 projects to complete the enclosure and to prevent the admission of foreign matter into the enclosure.

Positioned between the table 8 and the base 1 is an upthrust bearing 13 to take any upthrust which may be applied to the rotary table 8. The main supporting bearing 9 and the upthrust bearing 13 cooperate to provide a radial bearing for the rotary table and maintain its axial alignment within the opening provided through the base 1.

The stationary portions of the bearings 9 and 13 are mounted upon the removable bearing ring 14 positioned within the base 1 upon the shoulder 10 and secured in position by means of a plurality of bolts 15. Carried by the rotary table 8 to form a gear table is a gear 16. In order to provide for the desired bearing clearance between the bearings 9 and 13, an upthrust bearing ring 17 is threadedly secured to the downwardly extending skirt 18 of the gear or rotary table 8 so that by adjustment of the ring 17 the desired bearing clearance may be provided. With this assembly the rotary or gear table 8, bearings 9 and 13, and upthrust or bearing adjusting ring 17 may be removed as a unit from the base 1 upon removal of the bolts 15.

The pinion shaft assembly included in the rotary machine embodying my invention is preferably constructed to include a pinion 19 which is mounted upon and secured to the pinion shaft 20, which pinion shaft 20 is rotatably supported within the pinion shaft housing 4. The housing 4 has formed at its inner end an integral flange 21 by means of which the housing 4 is is secured at its inner end to the flange face 7 of the base extension 6 by means of screws 24. A gasket 22 is positioned between the flange 21

and the flange face 7 to provide an oil tight seal between these abutting faces. At the opposite end the bearing housing is provided with a bearing housing cap 23 which is secured in position by means of screws 23a. In order to provide for the adjustment of the cap 23 with respect to the housing 4 shims 25 are provided.

The pinion shaft 20 is rotatably supported within the housing 4 by means of bearings 26 and 27 which are spaced apart and which are of the conventional radial type. The pinion 19 is keyed to the inner end of the shaft 20 and a driving sprocket 28 is keyed to the outer projecting end of the shaft 20. A protector 29 is secured to the outer end of the shaft 20 to protect the operator from the key. The sprocket 28 is axially adjustable on the pinion shaft 20 in order to be aligned correctly with the driving sprocket of a rotary drawworks (not shown).

In order to hold the rotary table 8 from rotation, the pinion 19 is preferably formed with an integral lock ring 30 having radially projecting lock lugs 31. The lock ring 30 is preferably formed of such diameter as to provide a recess 32 into which extends the inner end of the housing 4 which supports the inner supporting bearing 26.

The lock lugs 31 are preferably of a diameter not to exceed the largest diameter of the pinion 19. In order to provide for the end thrust imposed upon the pinion 19 and to provide for the maintaining of the bearings 26 and 27 spaced, there is provided within the housing 4 a spacer sleeve 33 and a thrust bearing 34. The thrust bearing 34 is positioned between the inner race of the inner bearing 26 and a shoulder formed within the sleeve 33. With the construction as thus provided, the axial outward thrust of the pinion 19 is transmitted through the inner race of the bearing 26 to the thrust bearing 34 and from the bearing 34 the thrust reaction is carried through the spacer 33 and the outer race of the bearing 27 to the cap 23.

The foregoing described construction permits a maximum center-to-center spacing of the bearings 26 and 27 between the pinion 19 and the sprocket 28.

In order to provide for the setting of the housing 4 upon the extension 3 of the base 1 to provide a rigid mounting and to maintain the alignment of the pinion shaft 20 with reference to the gear 16 with a minimum of expense, the following construction is preferably provided:

The outer support on the base 1 includes a pedestal portion 35 formed integrally with the base extension 3. The pedestal portion 35 is formed with a semi-circular recess 36 which is preferably formed to a radius to correspond with the radius of the circular opening 37 in the extension 6. With this construction it is possible to machine the two circular portions 36 and 37 in exact alignment at one "set up" on the boring machine which performs this operation.

The housing 4 is provided with complementary portions 38 and 39 which register with the recesses 36 and 37, respectively. The outer end of the housing 4 is clamped to the base extension 3 by means of bolts 40 which pass through the pedestal portion 35 and the foot extension 38 of the housing 4. To accurately align the housing 4 relative to the base 1 against any rotating tendency, I prefer to provide a keyed connection, including a key 41 and a complementary keyway 42 between the base 1 and the housing 4.

In removing the housing 4 from the base 1, it is necessary to remove the screws 24 and bolts 40 whereupon the pinion shaft assembly, including the housing 4, may be moved outwardly to the position illustrated in Figure 2. In order to facilitate this operation, I provide guide ribs 43 on the housing 4 which ride on the contour 36 and guide ribs 44 on the base extension 3 which engage and support the flange 21 of the housing 4. An eye bolt 45 is employed for lifting the assembly from the base 1. Since the flange 21 has a diameter greater than the diameter of the recess 36, the housing can not be moved outwardly beyond the position as illustrated in Figure 2. Therefore it is necessary to proportion the opening between the flange face 7 and the inner face of the pedestal 35 to permit the pinion 19 to be withdrawn from the base as a unit with the housing 4 to a point where the pinion shaft assembly may be lifted vertically from the base 1.

The bearing 27 is lubricated through a fitting 46 that is in communication with the passages 46a and 46b provided in the base extension 6 and housing 4 respectively. The bearing 26 is supplied with lubricant passing through fitting 47 which is in communication with passages 47a and 47b, in the base extension 6 and housing 4, respectively. The communicating means between the passages 46a and 46b and 47a and 47b includes two studs 46c and 47c, respectively, which have an axial passage to connect the passages 46a and 46b and 47a and 47b, respectively. A nut is provided on the studs 46c and 47c for the purpose of clamping the flange 21 to the flange 7 to prevent any leakage of lubricant through the gasket provided at this joint.

Two lock pawls 49 and 50 are mounted on opposite sides of the pinion shaft 20 within an enclosure defined by the extension 6. The lock pawls 49 and 50 are pivotally mounted on shafts 51 and 52, respectively, in a position so that they can be rotated to engage the lock lugs 31 on the lock ring 30 as illustrated in Figure 6 for the lock pawl 49, or may be rotated to an inoperative position to engage the inner face of the extension 6 as illustrated in Figure 6 for the lock pawl 50. The shaft 51 extends through the wall of the extension 6 and is rotatably supported therein by means of a sleeve 51a. A lever 53 is provided on the shaft 51 for actuation thereof at a position without the enclosure defined within the housing 6. Provided between a bifurcation in the pawl 49 is a lever 54 which is connected to the pawl 50 by means of a link 55 passing transversely of the base at a point below the pinion. A pin 56 in the lever 54 engages a keyway in the shaft 51 for imparting rotation to the lever 54 upon actuation of the lever 53. The keyway is in the form of an arcuate recess to provide some lost motion in the rotary connection between the levers 54 and 53. Thus it will be seen that manipulation of the lever 53 imparts movement to the lever 54 which in turn moves the pawl 50 through the medium of the link 55.

The pawl 49 is journaled on the shaft 51 and is formed with a clutch face 57 which engages a complementary clutch 58 formed on the sleeve 51a. The sleeve 51a is formed with an actuating lever 59 for rotating the pawl 49 into and out of locking engagement with the lock ring 30.

In order to provide adequate lubrication for the table bearings and gearing within the base, an inlet 60 is formed in the base through which lubricant is supplied to the channel 61. Oil or lubricant supplied to the channel is conducted

by gravity around the channel to a point where it flows into the reservoir 62. The pinion 19 is immersed in the oil within the reservoir to the level of the overflow 63. Consequently, the rotation of the pinion causes the oil to be conveyed upwardly to the point of engagement between the pinion 19 and the gear 16. The oil upon being thrown from the gear 16 is collected in the channel 61 and conveyed back to the reservoir 62. New oil circulating into the channel 61 through the opening 60 displaces a corresponding amount of oil from the reservoir 62 through the overflow 63. The oil passing out of the overflow 63 is taken from the bottom of the reservoir through a passage 64.

Oil from the overflow port 63 is collected into a sump 65 formed in the lower part of the base and conveyed from the machine through a pipe 66.

Oil for the table bearings is circulated through an inlet 67 and through a duct 68 to fill the annular channel 69 in which the bearing 9 is located. Oil overflowing the inner rim of the channel 69 flows by gravity to the upthrust bearing 13 and the continuous supply of lubricant or oil to the bearing 9 maintains both bearings 9 and 13 continuously immersed in oil. The excess oil overflows the rim of the ring 17 and is conveyed by gravity into the sump 65 from which it is conveyed with the oil overflowing from the reservoir 62 through the outlet or drain 66.

In order to maintain a close relation of the parts around the base 1 and the ring 17, I prefer to provide a member 70 which is welded to the base to define an upstanding rim to surround the ring 17 and likewise provide with a groove formed in the ring 17 a labyrinth restriction against the entrance of foreign matter into the enclosure formed between the table 8 and the base 1.

With the construction as thus provided, I am enabled to maintain a continuous lubrication of the bearings and gearing of my rotary machine and likewise to provide for the reclamation of all of the oil circulated thereto.

In the rotary machine illustrated in the drawings I have illustrated a platform 71 which is supported on the base by means of pipe sections 72 which are fitted within pockets 73 formed on the base 1. This platform is located at a level substantially flush with the upper surface of the rotary table and is for the purpose of providing a support for tools and drill pipe that may be stacked upon the rotary machine.

The invention resident in the circulating oil system herein described and the structure of the rotary machine permitting of this operation as herein defined, is independent of the invention herein claimed and this subject matter is reserved for a divisional application.

Having fully described my invention, it is to be understood that I do not wish to be limited to the details herein set forth, but my invention is of the full scope of the appended claims.

I claim:

1. In a rotary machine, a base, a table rotatably mounted on the base, a gear carried by the table, a drive means for driving the gear, including a pinion and a pinion shaft, means cooperating with the table and the base forming an enclosure for the gear, pinion and pinion shaft to prevent the admission of foreign matter thereto, lock pawls pivotally mounted on opposite sides of the pinion shaft within the enclosure to selectively engage the drive means for locking the gear from rotation in both directions or in either direction, and means to selectively actuate said lock pawls including a pair of lock pawl actuating levers positioned exteriorly of said enclosure and being independently rotatable about a common axis.

2. In a rotary machine, a base, a table rotatably mounted on the base, a gear carried by the table, a drive means for driving the gear, including a pinion and a pinion shaft, means cooperating with the table and the base forming an enclosure for the gear, pinion and pinion shaft to prevent the admission of foreign matter thereto, lock pawls pivotally mounted on opposite sides of the pinion shaft within the enclosure to selectively engage the drive means for locking the gear from rotation in both directions or in either direction, a pair of actuating means for said pawls positioned to one side of said pinion shaft exteriorly of said enclosure, and separate means operatively connecting each of said pawls with a separate actuating means.

3. In a rotary machine, a base, a table rotatably mounted on the base, a gear carried by the table, a drive means for driving the gear, including a pinion and a pinion shaft, means cooperating with the table and the base forming an enclosure for the gear, pinion and pinion shaft to prevent the admission of foreign matter thereto, lock pawls pivotally mounted on opposite sides of the pinion shaft within the enclosure to selectively engage the drive means for locking the gear from rotation in both directions or in either direction, a pair of actuating means for said pawls positioned to one side of said pinion shaft exteriorly of said enclosure, means operatively connecting one of said actuating means with the lock pawl on the far side of the shaft including an element extending transversely of the axis of said shaft, and means operatively connecting the other of said actuating means with the other lock pawl.

4. In a rotary machine, the combination of a base having an outwardly extending section, a pinion shaft assembly removably secured to said extension, the base having an upstanding annular wall provided with an opening which is closed by said assembly when in position on said base, a table supported by the base, said table having gear means positioned within said annular wall and driven from said pinion shaft assembly, said pinion shaft assembly including a pinion, a shaft, a housing enclosing said bearing means, said housing being removably secured to the base at points spaced along the length of said housing, the inner support adjacent the pinion end of said assembly comprising a circular portion of said housing fitting within a complementary bore formed in the wall of said base, the outer support being with reference to the outer end of said housing, said supports being of circular contour, means positioned longitudinally of the housing between said supports to secure said housing to the base, and key means between the base and the housing to retain the housing from rotation relative to the base.

5. In a rotary machine, a base, a rotary member mounted on the base, a gear carried by said member, a drive means for driving the gear including a pinion and a pinion shaft, bearing means carried by the base and adapted to rotatably support the shaft, lock pawls pivotally mounted on opposite sides of the pinion shaft to selectively engage the drive means for locking the gear from rotation in both directions or in either direction, and means to selectively actuate the

lock pawls including a pair of lock pawl actuating levers, said levers being independently rotatable about a common axis.

6. In a rotary machine, a base, a rotary member mounted on the base, a gear carried by the member, a drive means for driving the gear including a pinion and a pinion shaft, bearing means carried by the base and adapted to rotatably support the shaft, lock pawls pivotally mounted on opposite sides of the pinion shaft to selectively engage the drive means for locking the gear from rotation in both directions or in either direction, a pair of actuating means for said pawls positioned to one side of said pinion shaft, means operatively connecting one of the actuating means with the lock pawl on the far side of the shaft including an element extending transversely of the axis of the shaft, and means operatively connecting the other of the actuating means with the other lock pawl.

7. In a rotary machine, a base, a rotary member mounted on the base, a gear carried by the member, a drive means for driving the gear including a pinion and a pinion shaft, bearing means carried by the base and adapted to rotatably support the shaft, lock pawls pivotally mounted on opposite sides of the pinion shaft to selectively engage the drive means for locking the gear from rotation in both directions or in either direction, a pair of actuating means for said pawls positioned to one side of said pinion shaft and being rotatably mounted about a common axis, means operatively connecting one of said actuating means with the lock pawl on the far side of the shaft including an element extending transversely of the axis of the shaft, and means operatively connecting the other of the actuating means with the other lock pawl.

LEWIS E. ZERBE.