Jan. 19, 1943. K. L. KONNERTH 2,308,517

METHOD OF AND APPARATUS FOR MINING

Filed Jan. 7, 1941 7 Sheets-Sheet 1

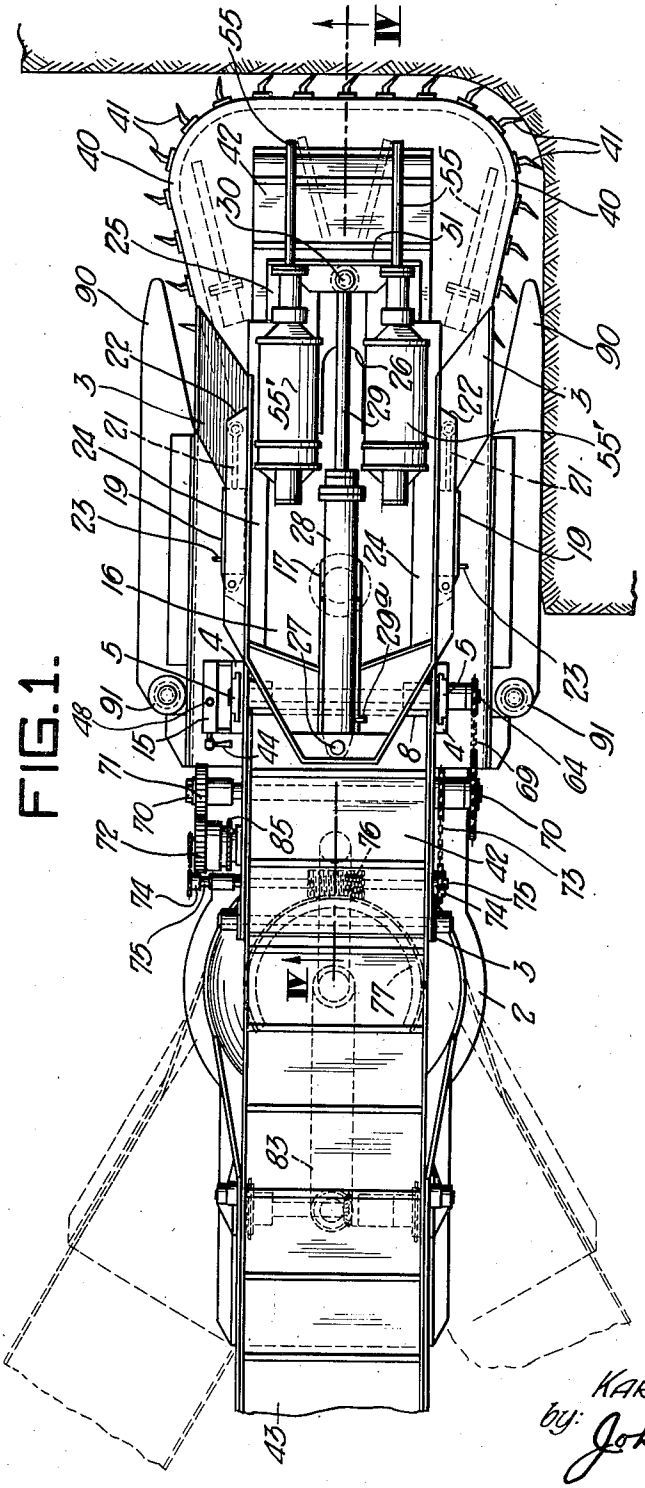

FIG. 1.

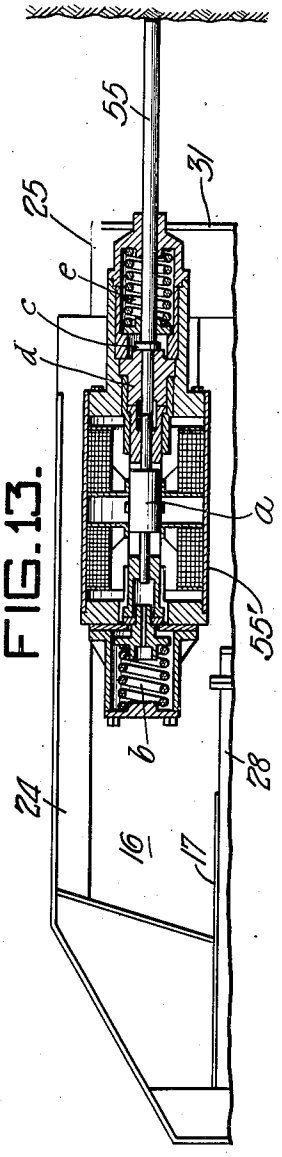

FIG. 13.

Inventor:
KARL L. KONNERTH,
by: John E. Jackson
his Attorney.

Jan. 19, 1943. K. L. KONNERTH 2,308,517

METHOD OF AND APPARATUS FOR MINING

Filed Jan. 7, 1941 7 Sheets-Sheet 2

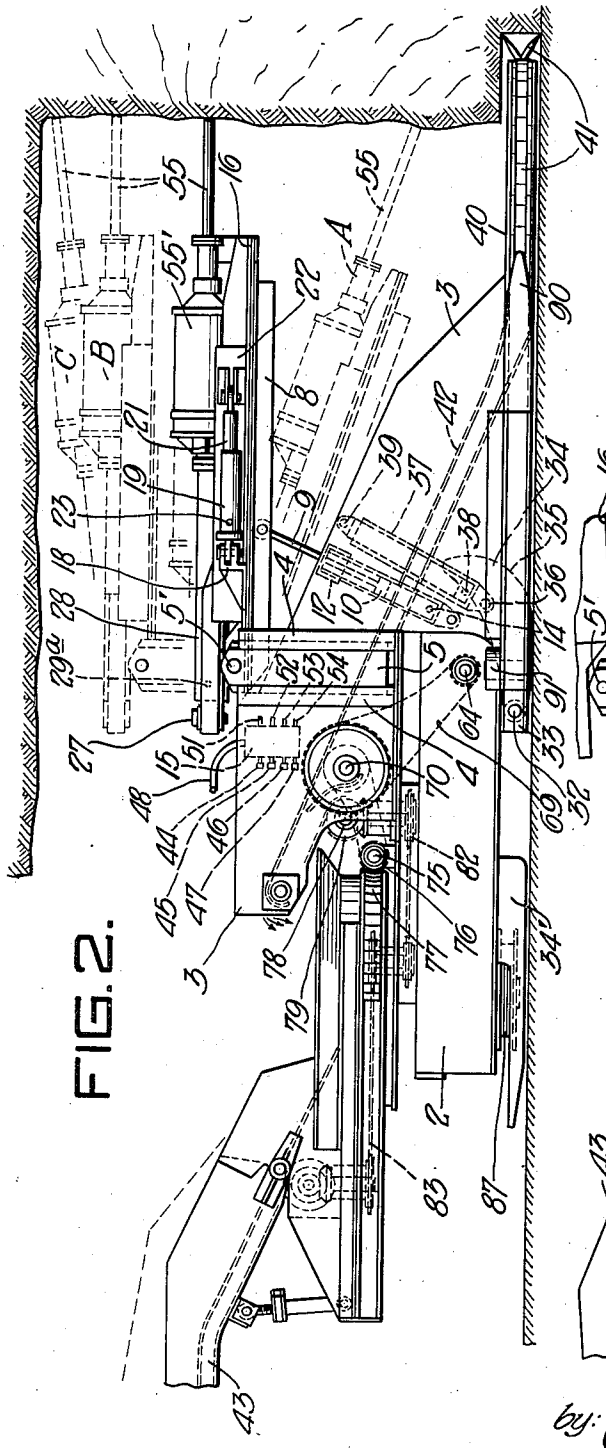

FIG. 2.

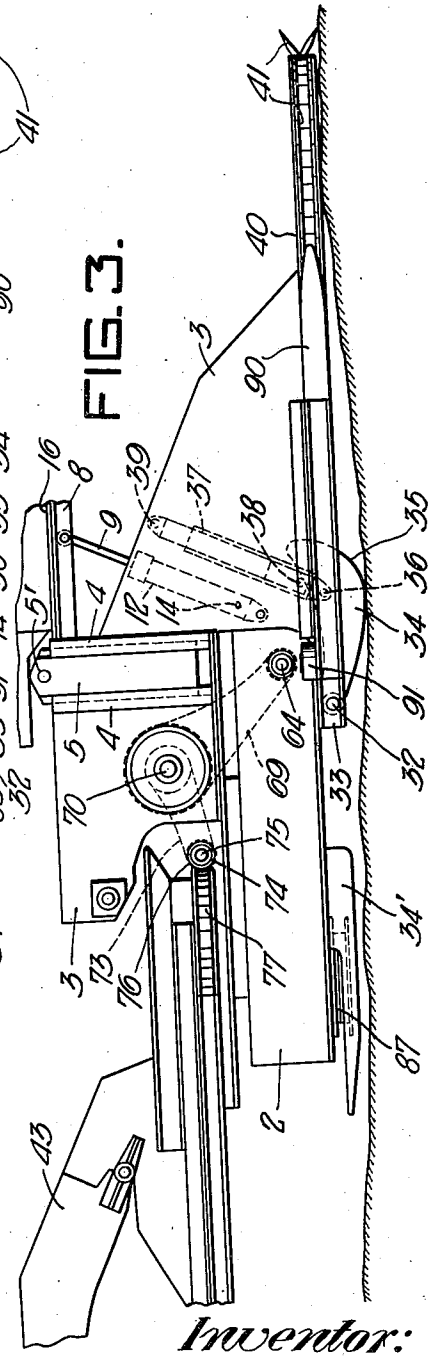

FIG. 3.

Inventor:
KARL L. KONNERTH,
by: John E. Jackson
his Attorney.

Jan. 19, 1943. K. L. KONNERTH 2,308,517

METHOD OF AND APPARATUS FOR MINING

Filed Jan. 7, 1941 7 Sheets-Sheet 3

FIG. 4.

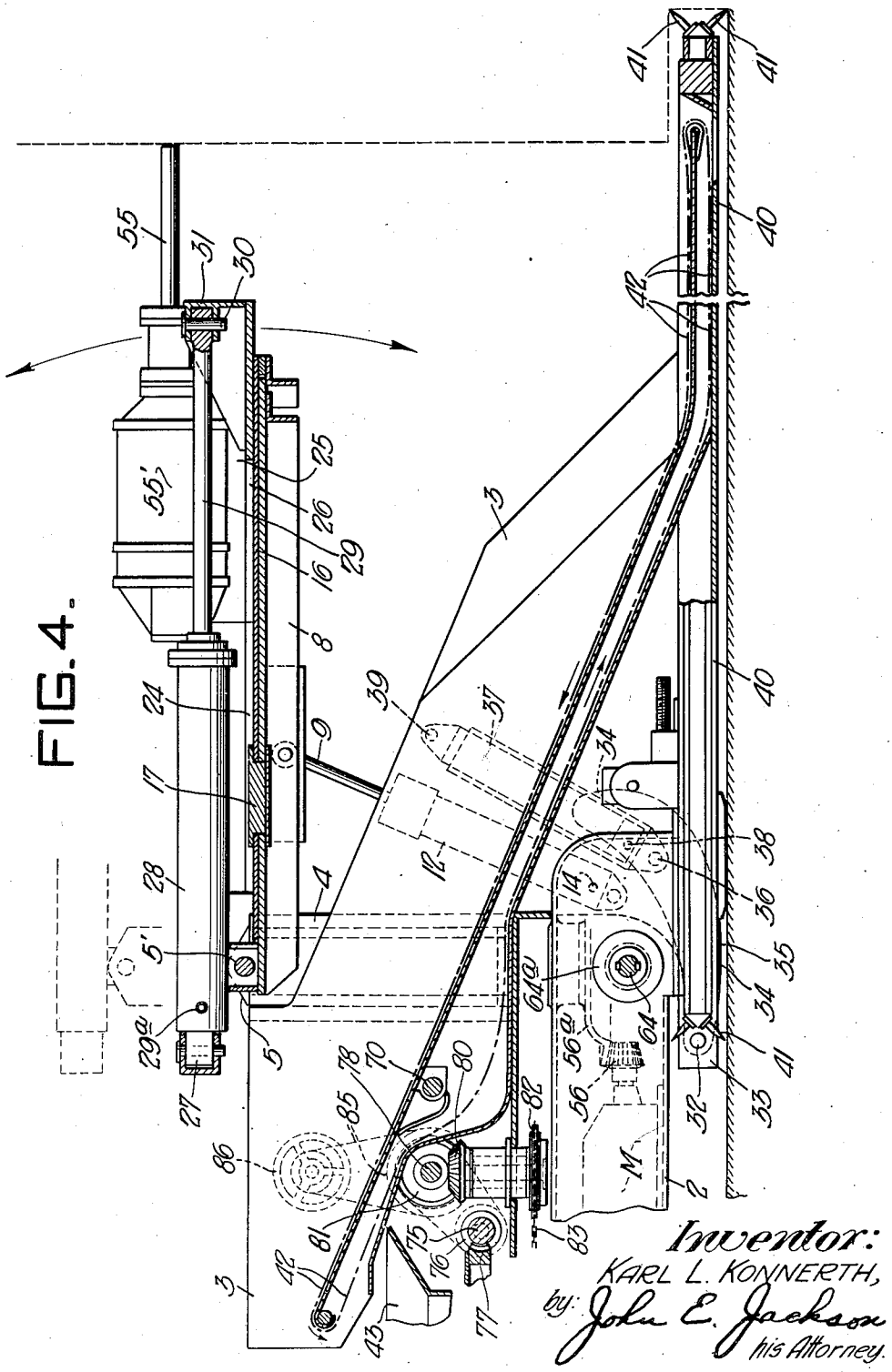

Inventor:
KARL L. KONNERTH,
by: John E. Jackson
his Attorney.

Jan. 19, 1943. K. L. KONNERTH 2,308,517

METHOD OF AND APPARATUS FOR MINING

Filed Jan. 7, 1941 7 Sheets-Sheet 4

FIG. 5.

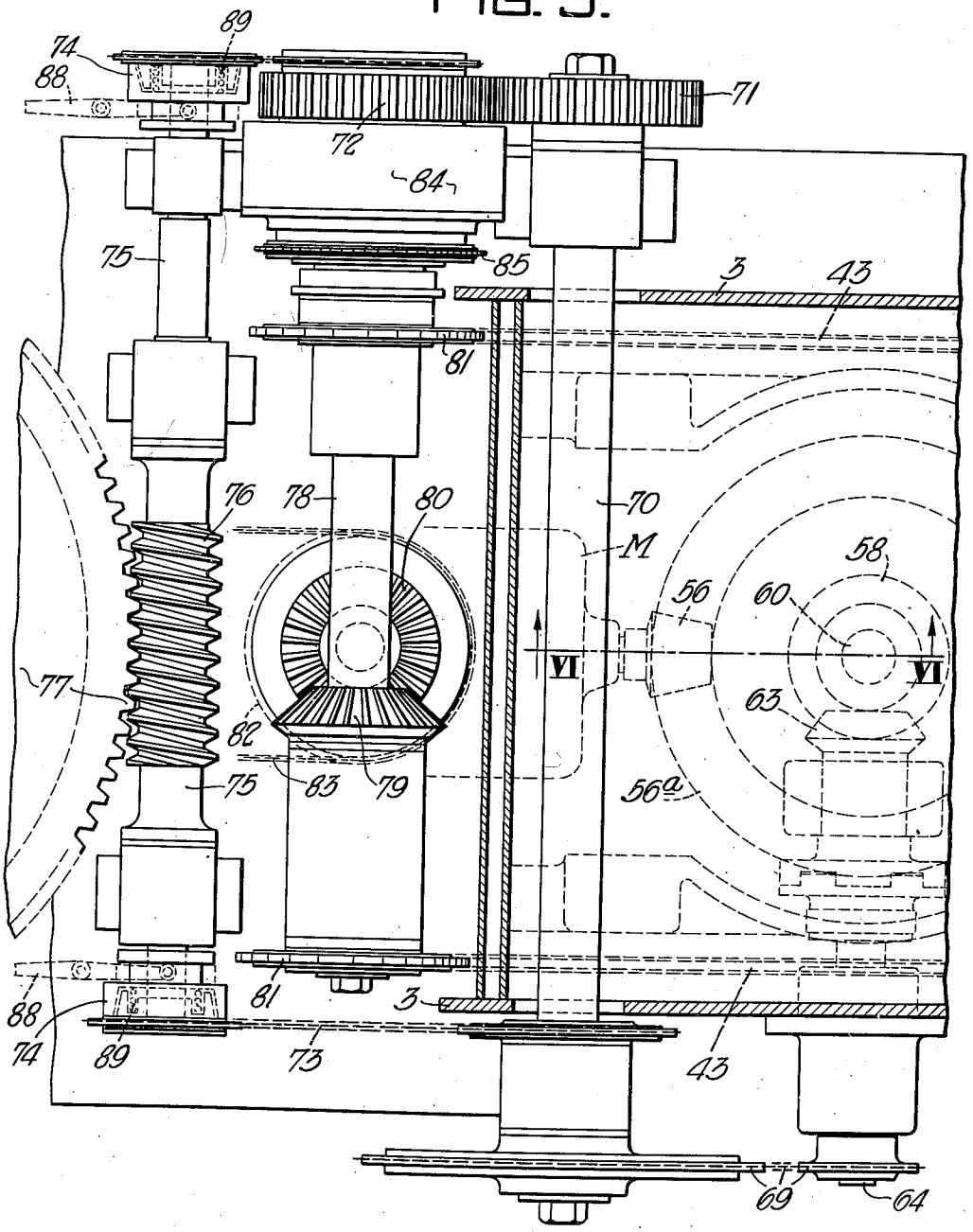

Inventor:
KARL L. KONNERTH,
by: John E. Jackson
his Attorney.

Jan. 19, 1943. K. L. KONNERTH 2,308,517

METHOD OF AND APPARATUS FOR MINING

Filed Jan. 7, 1941 7 Sheets-Sheet 5

FIG. 6.

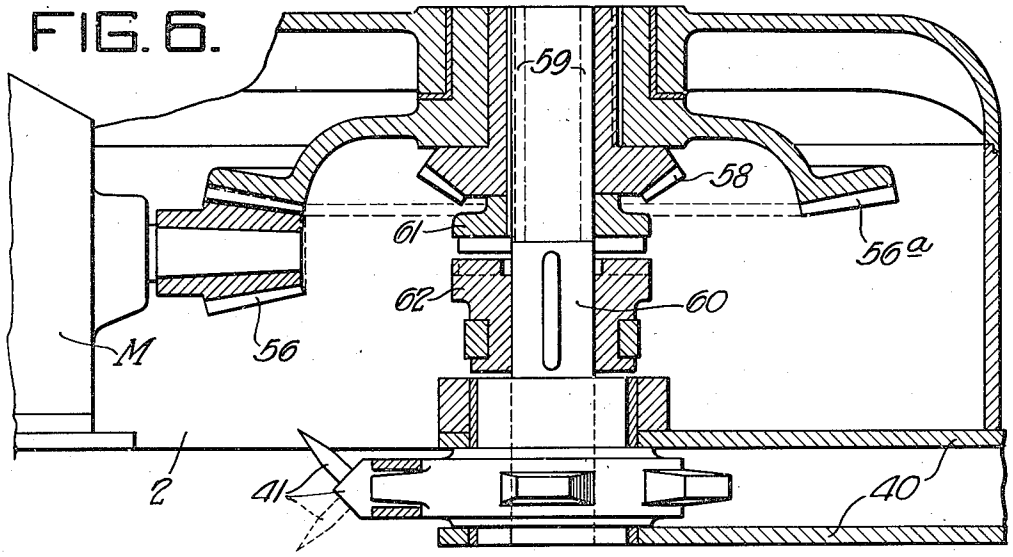

FIG. 7.

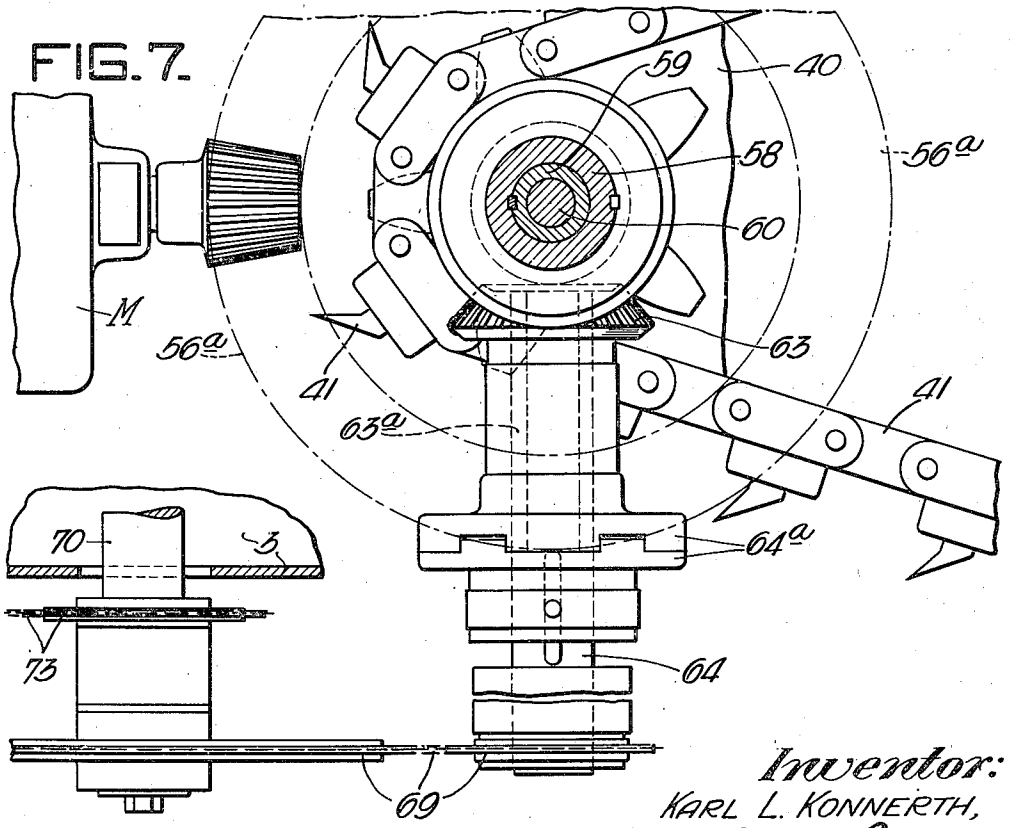

Inventor:
KARL L. KONNERTH,
by: John E. Jackson
his Attorney.

Jan. 19, 1943. K. L. KONNERTH 2,308,517

METHOD OF AND APPARATUS FOR MINING

Filed Jan. 7, 1941 7 Sheets-Sheet 6

FIG. 8.

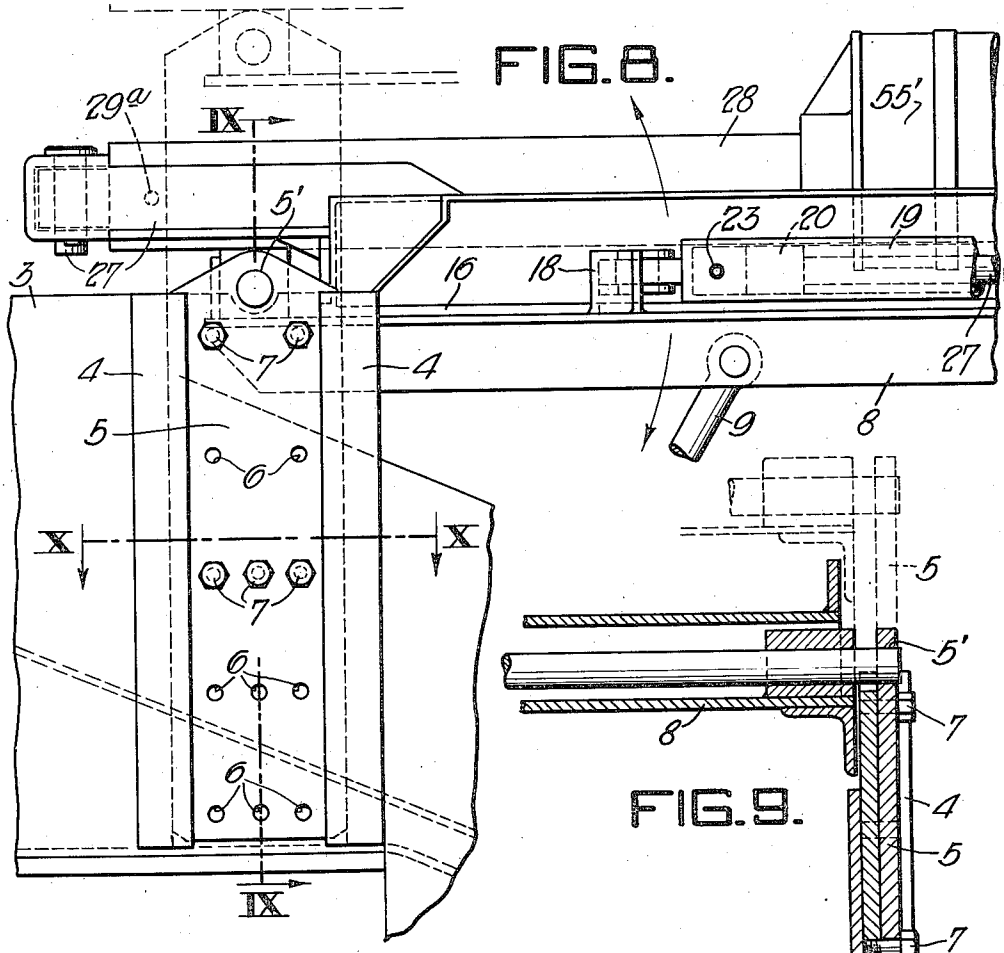

FIG. 9.

FIG. 10.

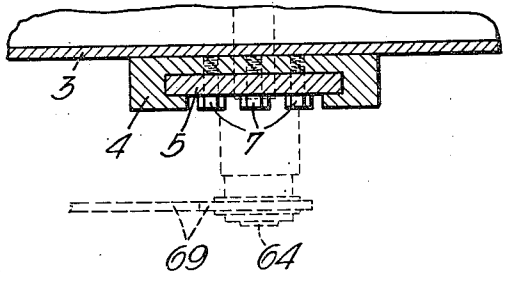

Inventor:
KARL L. KONNERTH,
by: John E. Jackson
his Attorney.

Jan. 19, 1943. K. L. KONNERTH 2,308,517

METHOD OF AND APPARATUS FOR MINING

Filed Jan. 7, 1941 7 Sheets-Sheet 7

FIG. 11.

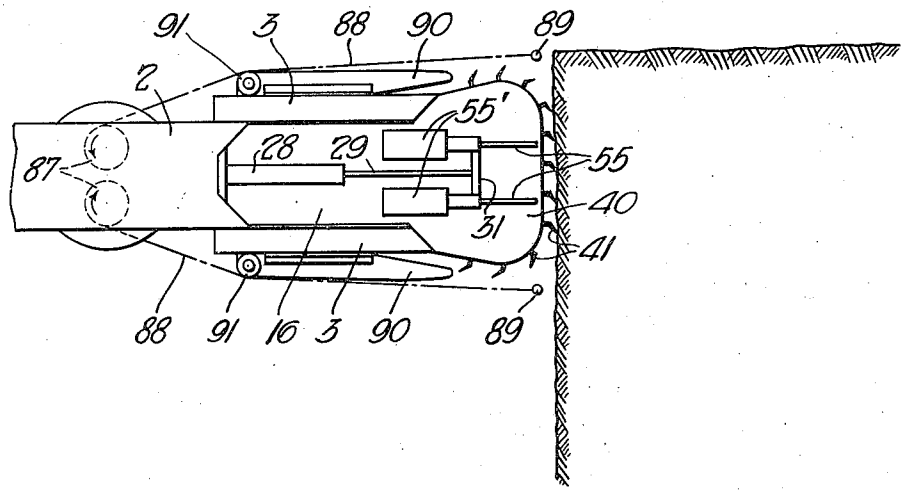

FIG. 12.

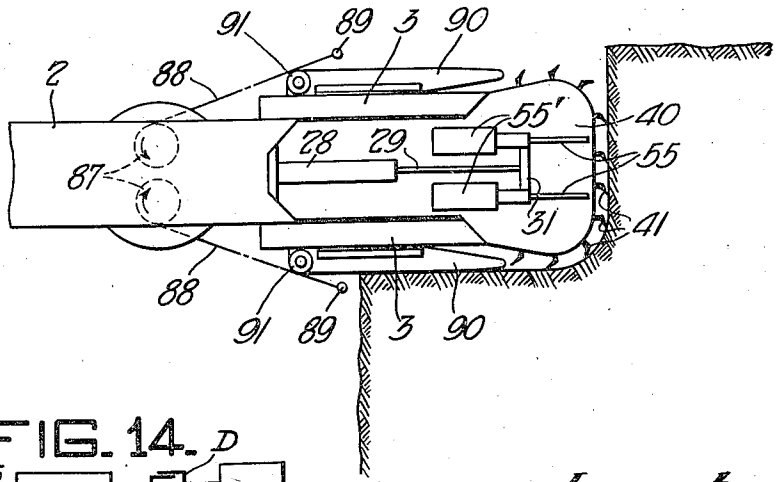

FIG. 14.

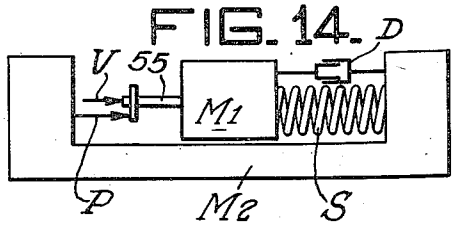

Inventor:
KARL L. KONNERTH,
by: John E. Jackson
his Attorney.

Patented Jan. 19, 1943 2,308,517

UNITED STATES PATENT OFFICE

2,308,517

METHOD OF AND APPARATUS FOR MINING

Karl L. Konnerth, Uniontown, Pa.

Application January 7, 1941, Serial No. 373,504

16 Claims. (Cl. 262—1)

The present invention relates to mining machines and a method of fracturing and removing coal and the like, this application being a continuation in part of my prior application, filed November 17, 1937, Serial No. 175,118.

It is a prime object of this invention to provide a method of mining which fractures and separates coal or other material from its natural bed by the use of forced vibration, whereby to mine the coal or other material in a highly efficient manner and with greatly increased production in comparison with the commonly employed methods, of drilling, picking or blasting.

My invention contemplates the conjoint application of pressure and a source of vibration to the coal bed in such a manner as to define a vibration-responsive mass of the coal and to vibrate said mass at substantially its resonance frequency, to thereby fracture and separate said coal mass from the bed. By forced vibration of the responsive mass to substantially its resonance frequency, the resulting amplified total vibration results in the fracturing and separation of sufficient coal volume adjacent the coal face as to afford a highly successful, speedy and efficient method of mining.

A further object of my invention is to provide improved apparatus for carrying out the said method.

Still further objects are to provide an apparatus for the purposes stated by which a suitable pressure may be applied to the coal bed together with the application of a vibratory force thereto; to provide an apparatus which will have sufficient mobility and adjustability to engage and attack the coal bed over a substantial area thereof; and to provide an apparatus which is highly efficient and durable, and one which may be readily operated in the restricted space usually encountered in mining operations.

Additional objects and advantages will become apparent from the following description taken in connection with the accompanying drawings, wherein;

Figure 1 is a top plan of a mining machine constructed in accordance with the present invention;

Figure 2 is a side elevation of the machine shown in Figure 1;

Figure 3 is a side elevation similar to Figure 2 showing the machine elevated from the mine floor;

Figure 4 is a detailed sectional elevation on the line IV—IV of Figure 1;

Figure 5 is a plan, partly in section, of the drive mechanism for the present invention;

Figure 6 is a section on the line VI—VI of Figure 5;

Figure 7 is an enlarged detailed elevation of the driving mechanism for the kerf cutter chain;

Figure 8 is a detailed side elevation of one of the guides and showing its pivotal connections to the frame carrying the hammers;

Figure 9 is a section on the line IX—IX of Figure 8;

Figure 10 is a section on the line X—X Figure 8;

Figure 11 is a diagrammatic showing of a method of advancing the machine to the face of the wall of the coal;

Figure 12 is a similar view, showing the machine advancing through the wall of coal;

Figure 13 is an enlarged view of one of the hammers of Figure 1, broken away to show the interior thereof; and

Figure 14 is a diagrammatic view of the vibrating system employed in my invention.

In the drawings, the numeral 2 represents the main framework of the mining machine upon which the operating parts, to be hereinafter described, are mounted. An auxiliary frame 3 is positioned and arranged at the forward end of said main frame 2 and is provided, upon each side, with guideways 4 within which are positioned guides 5 adapted for vertical movement. These guides are provided with a plurality of openings 6 (Figure 8) through which bolts 7 pass and engage said guideways, to securely hold said guides in their adjusted vertical position.

A tool-supporting carriage 8 is pivotally connected, at one end, to each of said guides 5, and has pivotally connected on each side thereof rods 9 provided with pistons 10 operating within cylinders 12 having an opening 14 for receiving a source of pressure supply through a flexible pipe (not shown) extending from a valve control box 15.

An auxiliary frame 16 is positioned on top of said tool-supporting carriage and pivoted thereto at 17 to permit said auxiliary frame to be moved in a horizontal plane transversely across the wall of the mass of coal to be mined.

The tool-supporting carriage 8 is provided with extensions 18, on each side thereof, to which are pivotally supported, for horizontal movement, cylinders 19 adapted to receive the pistons 20 (Figure 8) carried by the piston rods 21. The ends of the piston rods 21 are provided with an eye for pivotally connecting the same with the extensions 22 on the auxiliary frame 16. Each of the cylinders 19 is provided with an opening 23 to receive a flexible pipe (not shown) extend-

ing from the valve control box 15 for supplying pressure to the cylinders for controlling the transverse movement of the auxiliary frame 16 in a horizontal plane across the wall of the mass of coal to be mined. The auxiliary frame 16 is provided with inwardly-extending flanges 24 and spaced from the bottom of the auxiliary frame 16 to form guideways within which is adapted to advance or retract, a hammer-carrying carriage 25. The hammer-carrying carriage 25 is provided with a cut-out portion 26 at one end thereof to provide clearance for the pivot 17 as the hammer-carrying carriage 25 is moved back or forth in the guideways formed on the auxiliary frame 16. A cylinder is pivotally secured to the pivot 27 at one end thereof and a piston carried by the piston rod 29 is adapted to reciprocate back and forth within said cylinder 28. This cylinder 28 is provided with an opening 29^a for receiving a pipe connection of any conventional construction (not shown) extending from the valve control box 15 for supplying pressure thereto for operating the piston thereof. The end of the piston rod is pivotally connected at 30 to an upwardly-extending flange or lug 31 on the forward end of the hammer-carrying carriage.

Secured to the hammer-carrying carriage 25, in any desired manner, are one or more hammer-operating mechanisms 55', within each of which is positioned a free-moving piston *a*. Located within the nose of each hammer-operating mechanism 55' is the shank of a preferably blunt dislodging tool 55, so positioned and arranged within the hammer-operating mechanism as to be operated on by blows from said free-moving piston repeated at a rate from 1000 to 2000 blows per minute. For example, the hammers 55' may be electrically operated, to reciprocate their free-moving pistons *a* forwardly and backwardly at high velocity. Each piston strikes directly on the shank of its dislodging tool 55 on the forward stroke and against a spring back stop *b* on the backward stroke, the said hammers being operated in synchronism.

Each dislodging tool 55 is provided with an integral collar *c* enclosed within the hammer device, the rear face of said collar being engaged by a bushing *d* fixed in the hammer structure, whereby the forward pressure of the piston of hydraulic cylinder 28 upon said structure is transmitted directly to the tool 55, urging the same against the coal face and maintaining contact therewith during operation. A spring *e* is preferably provided at the forward end of the hammer for coaction with its piston to reciprocate the tool without injury thereto, when the latter is free of the coal face.

Pivotally secured at 32 to a frame 33, on each side of the machine, are shoes or members 34 having an arcuate surface-engaging face 35. Pivotally connected at 36 to the forward end of each shoe 34 is a cylinder 37 provided with an opening 38 for receiving a pipe (not shown) extending from the control valve box 15. A piston is operable within the cylinder 37 and is pivotally connected, at 39, to the forward end of the auxiliary frame 3.

Secured to the main frame 2 and extending forwardly of the machine is a breast cutter frame 40 around which the endless cutting chain 41 moves for cutting a kerf in the mass of coal at the bottom thereof, as shown in Figure 2 of the drawings. An endless receiving conveyer 42 is positioned and arranged within the breast cutter frame 40 and extends upwardly in an inclined position through the auxiliary frame 3 to discharge coal received thereon to the discharge conveyer 43 which leads back to the mine car.

Mounted on the auxiliary frame 3, or in any convenient location, is a control valve box 15 having control valves 44, 45, 46 and 47, either manually or automatically controlled, as desired. Extending from the control box 15 is a pipe 48 leading to a suitable source of fluid pressure supply (not shown). Extending from the control valve box 15 are pipes 51, 52, 53, and 54 connected, by flexible tubes or the like, to the respective openings in the cylinders 12, 19, 28 and 37, whereby fluid pressure may be selectively applied to the respective cylinders for effecting a vertical movement of the tool-supporting carriage, an oscillating movement of the auxiliary frame 16, a movement of the shoes 34 or a forward or rearward movement to the hammer-carrying carriage 25.

A suitable motor, indicated at M, rotates a bevel gear 56. This gear 56 is in mesh with a bevel gear 56^a. A bevel gear 58 is keyed to said gear 56^a and adapted to revolve on a sleeve 59 mounted loosely on a reduced portion of a shaft 60. Positioned on said sleeve 59 is an element 61 forming a part of a clutch, the other element of which is designated at 62. The element 61 of the clutch and gear 58 are keyed together on the sleeve 59, while the clutch element 62 is keyed to the lower portion of the shaft 60. Mounted upon the lower end of said shaft 60 is a sprocket for driving the endless cutting chain 41. Upon rotation of the motor, the gears 56^a and 58 revolve with the sleeve 59 on the reduced portion of the shaft 60 and, upon the throwing-in of the clutch element 62 to engage the clutch element 61, rotation of the shaft 60 is effected for driving the cutter chain 41. A bevel gear 63 is secured to a sleeve 63^a on one end thereof while one element of a clutch 64^a is secured on the opposite end of said sleeve. A shaft 64 extends within said sleeve and has secured to one end the sprocket wheel of the chain and sprocket assembly 69. A second element of the clutch 64^a is splined to said shaft 64 for slidable movement thereon to engage and disengage the elements of said clutch 64^a to impart rotary motion to said shaft 64. A shaft 70 is rotated upon movement of the chain and sprocket arrangement 69 and carries on one end thereof a gear 71 adapted to mesh with the gear 72 (Figure 1), while on the opposite end of said shaft there is mounted a chain and sprocket arrangement 73 connected to a normally opened clutch member 74 for transmitting movement to a shaft 75 having a worm 76 thereon for engaging the worm wheel 77 which controls the horizontal movement, in a transverse plane, of the discharge conveyer mechanism 43.

A shaft 78 is keyed to the gear 72 and is provided with a bevel gear 79 (Figure 5) adapted to mesh with the gear 80. Sprocket wheels 81 are carried by the shaft 78 for imparting movement to the conveyer chain for operating the conveyer 42, while a sprocket 82 (Figures 2 and 5) is adapted to rotate a chain and sprocket arrangement 83 (Figures 1 and 5) for driving the endless conveyer 43. Mounted upon the shaft 78, in any conventional manner, is a plate clutch 84 having a clutch release sprocket drive 85 extending to the handwheel 86 (Figure 4) in order to engage or disengage the clutch, as desired, with the shaft 78 to start or stop the conveyers 42 and 43.

The clutch 84 should preferably be of a disc

clutch construction, so that in case of obstructions, such as too large lumps of coal or conveyers 42 or 43 becoming fast in any way, provision is made for slippage of the drive-in clutch 84 to prevent mechanical injury.

The machine receives its electrical power through a suitable trailing cable connected in the conventional manner to the mine circuit at the most suitable point.

The operation of the machine is as follows:

Mounted in any conventional manner upon the main frame of the mining machine is a rope friction feed drum 87 driven from the motor through any conventional connection to advance or retract the mining machine in its mining operation, as shown in Figures 11 and 12.

Suitable anchor jacks 89 are provided to receive the cables 88 from the drums 87 so that as the rope or cable drums 87 rotate, the cables 88 are simultaneously wound on said drums, thereby advancing the entire machine longitudinally towards the mass of coal until the cutter chain 41 engages the wall of the coal, as diagrammatically shown in Figure 11. The direction of movement of the machine is controllable by relocation of the anchoring jacks and operating either or both of the rope drums 87.

The operator occupies a position most advantageous to readily control the several valves in the control box 15 in order to operate the various mechanisms hereinabove described and, as shown in Figure 11, as soon as the machine has been positioned adjacent the wall to be mined, the motor, which rotates the gear wheels 56, 56a and 58, is started and, upon throwing in the clutch 61, 62 (Figure 6) the shaft is caused to rotate the endless cutter chain 41 during the operation of the rope drum feeding mechanism, to cut a kerf in the lower portion of the mass of coal as shown in Figure 2.

The dislodging tools 55, 55 remain in parallelism as shown in Figure 1 in full lines, and are forcibly coupled with the solid mass of the mine vein by the hydraulic motor 28. The various positions of the tools 55, 55 are controlled by supplying pressure to the cylinders 10 so as to elevate the tool-supporting carriage 8 to the required vertical height.

Before the dislodging tools are forced into contact with the mass of coal in its native bed, the motor 10 may be operated to adjust the tool-carrying carriage 8 vertically, together with the guides 5, due to its pivotal connection therewith at 5'. After the guides have been moved vertically to elevate the tool-carrying carriage to its proper vertical position, it is held in its adjusted position by the bolts 7. (Figure 8.) After the kerf has been cut or during the cutting thereof, the tools 55 may be adjusted on the upright pivot 17 to one of the dotted line positions shown in Figure 1, while the tools remain in parallelism with the cylinder 28. The preferred starting position is shown at A in dotted lines in Figure 2.

With the tools 55 so positioned, they are subjected to a substantial initial pressure by means of cylinder 28 continuously urging said tools against the coal face, said pressure being sufficient to maintain the tools in contact with said coal during the forced vibration thereof by means of their synchronous hammers 55'.

The pressure application of the tools against the coal face continuously stresses the coal bed in the region thereof, and the volume of the coal so stressed, responds to and vibrates with the applied vibration of the hammers. The said volume of coal has mass and elasticity, and by continuously defining said mass through maintaining the stress thereon, it is capable of being vibrated in resonance when excited by forced successive similar vibrations in the same direction.

Coal in its native bed, although not strictly homogeneous from a microscopic point of view, is a continuous elastic media which reacts to external forces as do solid bodies, such as quartz, rock, steel, etc.

The pressure application of the tools against the coal face continuously stresses the coal bed in the region thereof, and the volume of the coal so stressed, responds to and assumes the mode of the applied forced vibration. Since the period of the applied forced vibration approaches the value of the free or natural period of the region constituting the responsive mass of coal, the phenomenon known as resonance is produced. Because of the enormously amplified reaction of the said coal mass when subjected to the above conditions, the local application of a relatively small impressed force is built up throughout a relatively large responsive mass of coal and generates such magnified internal stresses as to cause a breaking down of the whole mass.

The system so created is diagrammatically illustrated in Figure 14, which in mechanics represents a simple vibrating system, and wherein M1 indicates the stressed responsive mass of the coal entering into the vibrating system, S represents the elasticity or spring property of said coal, and M2 is the mass of the machine plus that of the surrounding earth, coal, etc. The tool 55 engages the coal mass M1 under the continuously applied pressure represented by the arrow P, and is acted upon by the impressed vibration of the hammer, as indicated by the arrow V. The dash pot D represents the internal friction or damping effect of the coal in its bed.

As such a system approaches resonance frequency, the cumulative effect of the forced vibration and the resilient motion of the coal volume will have an increased amplitude which quickly and effectively separates the coal from its native bed. The combined effect of the applied pressure and the vibration exceeds the internal strength or cohesive property of the coal, causing the coal to fracture and become dislodged. In actual practice, the fracture and separation of the coal occurs with great rapidity and throughout a very substantial area laterally about the locus of application of the machine to the coal face.

I have found that the coal immediately adjacent the face of the vein being attacked and above the kerf, separates and comes down freely due to the ability thereof to fall free and not interlock and become suspended. I have also observed that the vibration has likewise fractured the inner coal, and that while the same tends to lock itself in place or hang, particularly such coal as is inwardly beyond the extent of the kerf, such coal is readily dislodged after the removal of the coal in front thereof. Such a far reaching action into the coal bed evidences the amplitude of the vibration attained, and since the impressed forced vibration is of relatively low amplitude, the results clearly indicate that the system has produced a cumulative action such as is only attained through resonance.

Repeated tests have determined that such resonance occurs with an applied frequency of from 1000 to 2000 vibrations per minute, with best results for mining coal of the character

found in the Pittsburgh seam of the bituminous coal field being obtained at about 1800 vibrations per minute. It is believed that variations may occur due to the non-uniformity of the coal structure by reason of contained slate and other foreign matter, but the stated range of frequencies appears to permit satisfactory operation for all practical purposes.

While the tools 55, 55 enter the coal vein or bed during operation, it is to be particularly noted that they do so only by reason of following up and maintaining contact with the coal as and when portions of the coal are dislodged by the vibration, and virtually a new coal face is formed. Such action is accompanied by appreciable lateral dislodgment of the coal beyond the region of contact of the tools and is clearly distinct from the usual localized penetration accompanying the action of the common reciprocating pick or drill.

The present method may be employed with a machine of the character described having a single hammer, but a spaced pair thereof is preferred due to the increased effect obtained thereby laterally of the coal bed.

As distinguished from the former devices and practices referred to, my improved method enables the transmission or impression of forced vibrations through or upon the coal, without localized penetration by the tools employed, and sets up sufficient vibration waves in the coal as to result in the extensive fracture thereof. Such action greatly exceeds and surpasses the effects and results attained by the use of the simple reciprocating tools or hammers operated at the same frequency.

In this connection, it will be noted that I employ a machine having substantial mass which is anchored to the earth or mine floor, thereby affording a sufficiently heavy, substantially immovable abutment to enable the continuous pressure application of the tools 55 against the coal face by the cylinder 28 with sufficient magnitude as and for the purposes described. For example, the actual machine illustrated in the drawings weighs substantially fifteen tons, and the force of the tools 55 against the coal face has been employed at or about 4000 pounds with successful operation.

As the coal is fractured and broken down it is split vertically and horizontally into small lumps with a minimum production of dust or fines, and it falls on the conveyer 42 and, due to the drive mechanism hereinabove described, the conveyer 42 carries the coal rearwardly of the fracturing operation and onto the conveyer 43 for discharge into a mine car. The vibration of the coal as described effects dislodgement of large masses in a minimum space of time.

After the mass of coal has been dislodged below the dotted line position of the dislodging mechanism indicated at A in Figure 2, pressure is supplied, either manually or automatically, to the cylinders 10 for raising the tools to a point substantially as indicated in the full line position shown in Figure 2. The pressure by means of the motor 28 and the vibratory action are again applied to the tools 55, either manually or automatically, for breaking down or fracturing the coal between the second point of attack and the kerf, the latter having been, in effect, enlarged by the initial coal removal.

After such additional dislodgement has taken place, the tool-carrying carriage is raised again, either manually or automatically, to the positions shown at B and C in Figure 2, so as to ultimately break down the entire mass of coal across a transverse area. Due to the fact that the auxiliary frame 16 is pivotally supported at 17 on the tool carriage 8 and adapted for oscillating movement in a horizontal plane upon pressure being applied to the cylinders 19, it is possible to break down the mass of coal across its transverse plane of the wall being mined, as shown in dotted lines in Figure 1.

Secured to the frame of the machine, in any conventional manner, are guides 80 which engage the wall of the coal, as shown in Figure 12, to properly guide the machine in its forward movement and maintain said machine in its normal forward travel regardless of the tendency for sidewise movement caused by the action of the kerf cutting chain 41. Idling rollers 91 are secured to the guides 80 and act to guide the rope or cables 88 as they are wound or unwound upon the drums 87.

Whereas the cutter chain 41 has cut a kerf of full depth in the wall of the coal mass, the forward feed may be discontinued and the driving of said cutter chain stopped by disconnecting the clutch member 62 from the complementary clutch member 61, which prevents rotation of the shaft 60.

When it is desired to stop operation of the conveyers, the hand-wheel 86 is operated to disengage the friction plate clutch 84 and prevent rotation of the shaft 78.

When it is desired to swing the discharge conveyer 43 to one side or the other, as shown in dotted lines in Figure 1, either one of the normally open clutches 74 may be brought into operation by moving the lever 88 (Figure 5) inwardly against the tension of the spring 89 to rotate the gear 77 in the direction desired for ultimately swinging the conveyer 43 to its required dotted line position, as shown in Figure 1.

In advancing the machine toward the mass of coal to be mined there may be certain obstructions on the floor of the mine which may make it difficult to advance the machine in its forward direction and, if such be the case, the proper valve in the control box 15 is operated to supply pressure to the cylinders 37 whereby the shoes 34 are projected downwardly beyond the normal plane of the main frame of the machine to a position as shown in Figure 3 of the drawings. This operation elevates the forward end of the machine and overcomes any obstruction or depression which might require the proper leveling of the machine for cutting the kerf. The main advantage of the adjusting shoes 34 is to tilt the kerf cutter on the shoes 34' as a fulcrum to adjust the plane of the kerf to be cut at the bottom of the mine vein.

Under the present invention, there has been disclosed a machine and novel method for mining coal by being able to successfully break down or fracture a mass of coal, particularly the mass between the point of pressure and the kerf. By hydraulically pressing and maintaining the tools against the coal in its native bed and vibrating the system by reciprocating the pistons at a range of frequency between one thousand and two thousand vibrations per minute, successful fracturing of the coal over a large area in a minimum space of time is accomplished. With a frequency less than the stated limits, no appreciable effect is produced on the coal, and with a frequency above two thousand blows per minute there results a straight drilling action.

Within a certain latitude the pressure exerted on the tools by the hydraulic motor 28 and the rate of vibration exerted by the electrically operated hammers should be proportioned to the hardness of the material so as to secure a vibration in approximation to the natural or resonance period of the responsive mass of coal, avoiding either too great or too slow a vibration.

Under the present invention it is possible to continuously mine and load coal with no preparatory work, such as drilling, shooting and the like.

The dislodging tools 55 preferably have blunt coal-engaging ends for applying both pressure and vibration to the coal. While the tools may be pointed, I have found pointed tools to be generally less efficient than the preferred blunt form. The tools may be operated in any manner, either electrically, or hydraulically, or pneumatically, so long as the vibration and pressure of the tool is capable of producing the phenomenon known as resonance in the responsive mass of coal, and thereby fracture and separate the same from the bed as a result of the greatly amplified stress generated.

The operating medium for supplying pressure to the respective cylinders may be any desirable medium such as compressed air or hydraulic medium, and may be controlled by the type of valve illustrated.

While I have shown and described a specific method of operation and apparatus designed therefor, it is to be understood that various changes in the method and in the construction of the machine may be made without departing from the scope of the invention as defined by the following claims.

I claim:

1. In a mining machine having a main frame, a carriage, guideways on said main frame, guides movable vertically in said guideways, means for vertically adjusting said guides, said carriage pivotally supported by said guides, means for moving said carriage vertically, a frame mounted on said carriage and adapted to oscillate transversely in a horizontal plane, means for oscillating said frame, vibratory dislodging tools mounted on said frame and means for vibrating said dislodging tools at a range of frequency sufficient to fracture a mass of coal.

2. A mining machine comprising a main frame, a carriage on said main frame, guides slidably mounted on said carriage, a frame pivotally connected to said guides, means for vertically moving said frame about its pivot, a mining tool carriage mounted on said frame, means for swinging said mine tool carriage in a horizontal plane, dislodging tools mounted on said tool carriage and means for vibrating said dislodging tools at high frequency, said vibrating means including a reciprocating piston operating upon said dislodging tools at a frequency of not less than 1000 blows per minute.

3. A mining machine comprising a main frame, a carriage on said main frame, guides slidably mounted on said carriage, a frame pivotally connected to said guides, means for vertically moving said frame about its pivot, a mining tool carriage mounted on said frame, means for swinging said mine tool carriage in a horizontal plane, dislodging tools mounted on said tool carriage and means for vibrating said dislodging tools at high frequency, said vibrating means including a reciprocating piston operating upon said dislodging tools at a frequency of not more than 2000 blows per minute.

4. A mining machine comprising a main frame, a carriage on said main frame, guides slidably mounted on said carriage, a frame pivotally connected to said guides, means for vertically moving said frame about its pivot, a mining tool carriage mounted on said frame, means for swinging said mine tool carriage in a horizontal plane, dislodging tools mounted on said tool carriage and means for vibrating said dislodging tools at high frequency, said vibrating means including a reciprocating piston operating upon said dislodging tools at a frequency of not more than 2000 blows per minute and means for raising said main frame whereby said machine may be lifted over obstructions on the mine floor.

5. In a mining machine having a main frame, a carriage, guideways on said main frame, guides movable vertically in said guideways, means for vertically adjusting said guides, said carriage pivotally supported by said guides, means for moving said carriage vertically, a frame mounted on said carriage and adapted to oscillate transversely in a horizontal plane, means for oscillating said frame, vibratory dislodging tools mounted on said frame and means for vibrating said dislodging tools at a range of frequency sufficient to fracture a mass of coal, a breast cutting frame secured to the forward portion of said main frame, an endless cutter chain carried by said cutting frame and an endless conveyer positioned and arranged in the breast cutting frame and adapted to operate within the kerf formed by the cutting chain.

6. In a mining machine having a main frame, a carriage, guideways on said main frame, guides movable vertically in said guideways, means for vertically adjusting said guides, said carriage pivotally supported by said guides, means for moving said carriage vertically, a frame mounted on said carriage and adapted to oscillate transversely in a horizontal plane, means for oscillating said frame, vibratory dislodging tools mounted on said frame and means for vibrating said dislodging tools at a range of frequency sufficient to fracture a mass of coal, a breast cutting frame secured to the forward portion of said main frame, an endless cutter chain carried by said cutting frame and an endless conveyer positioned and arranged in the breast cutting frame and adapted to operate within the kerf formed by the cutting chain, said breast cutting frame extending forwardly of said dislodging tools.

7. A mining machine comprising a main frame, an auxiliary frame on said main frame, guides slidably mounted on said auxiliary frame, a carriage pivotally connected to said guides, means for vertically moving said carriage about its pivot, a mining tool supporting auxiliary frame mounted on said carriage, means for swinging said auxiliary frame in a horizontal plane, hammers mounted for vbratory movement on said auxiliary frame, and means for vibrating said hammers at a frequency of vibration substantially equal to the dangerous frequency of vibration of the mass of coal and not less than 1000 blows per minute.

8. The method of mining coal which consists in applying a source of vibration to a face of the coal in its native bed, vibrating said source in the range of from 1000 to 2000 vibrations per minute, and simultaneously stressing the coal by exerting sufficient pressure at the locus of application of the source of vibration to the coal face as to continuously maintain contact therebetween during such vibration, to fracture and separate a responsive mass of coal from the bed.

9. The method of mining coal which consists in engaging a face of the coal in its native bed with a blunt instrument, applying vibration to said instrument in the range of from substantially 1000 to 2000 vibrations per minute, and simultaneously stressing the coal by exerting sufficient pressure upon the instrument to maintain continuous contact thereof with said coal face during said vibration, to fracture and separate a responsive mass of coal from the bed.

10. The method of mining coal which consists in engaging a face of the coal in its native bed with a blunt instrument, applying vibration to said instrument at substantially 1800 vibrations per minute, and simultaneously stressing the coal by exerting sufficient pressure upon the instrument to maintain continuous contact thereof with said coal face during said vibration, to fracture and separate a responsive mass of coal from the bed.

11. The method of mining coal which consists in initially stressing the coal in its native bed by the application of pressure to a face thereof, applying a source of vibration to said face, vibrating said source in the range of from substantially 1000 to 2000 vibrations per minute, and simultaneously exerting sufficient pressure at the locus of application of the source of vibration to the coal face as to continuously maintain contact therebetween during said vibration, to fracture and separate a responsive mass of coal from the bed.

12. The method of mining coal which consists in simultaneously applying pressure and vibration to a face of the coal in its native bed, said pressure being sufficient to maintain continuous transmission of the applied vibrations to the coal, vibrating the coal stressed by said pressure and vibration to substantially the resonance frequency thereof, whereby the magnified internal stresses generated in the coal so stressed overcome the internal cohesive strength of the coal to fracture and separate the same from the bed.

13. The method of mining coal which consists in stressing the coal in its native bed by the application of pressure to a face thereof, whereby a mass of the coal is rendered responsive to an applied vibration, applying a source of vibration conjointly with said pressure and thereby vibrating the responsive mass of coal at substantially its resonance frequency, the magnitude of said stressing pressure being at least sufficient to maintain continuous transmission of the applied vibrations to the coal.

14. The method of mining coal which consists in simultaneously applying pressure and vibration to a face of the coal in its native bed, said pressure being sufficient to maintain continuous transmission of the applied vibrations to the coal, vibrating the coal stressed by said pressure and vibration by an applied vibration of a frequency of from substantially 1000 to 2000 vibrations per minute and to substantially the resonance frequency thereof, whereby the magnified internal stresses generated in the coal so stressed overcome the internal cohesive strength of the coal to fracture and separate the same from the bed.

15. The method of mining coal which consists in cutting a kerf in a coal bed, simultaneously applying pressure and vibration to a face of the coal adjacent the kerf, said pressure being sufficient to maintain continuous transmission of the applied vibrations to the coal, vibrating the coal stressed by said pressure and vibration to substantially the resonance frequency thereof, whereby the magnified internal stresses generated in the coal so stressed overcome the internal cohesive strength of the coal to fracture and separate the same from the bed.

16. The method of mining coal which consists in cutting a kerf in a coal bed, applying a source of vibration to a face of the coal adjacent the kerf, vibrating said source in the range of from 1000 to 2000 vibrations per minute, and simultaneously stressing in the coal by exerting sufficient pressure at the locus of application of the source of vibration to the coal face as to continuously maintain contact therebetween during such vibration, to fracture and separate a responsive mass of coal from the bed.

KARL L. KONNERTH.