(No Model.) 2 Sheets—Sheet 1.

M. MAYER.

SERIES PHOTOGRAPHIC CAMERA.

No. 525,991. Patented Sept. 11, 1894.

Fig. 1.

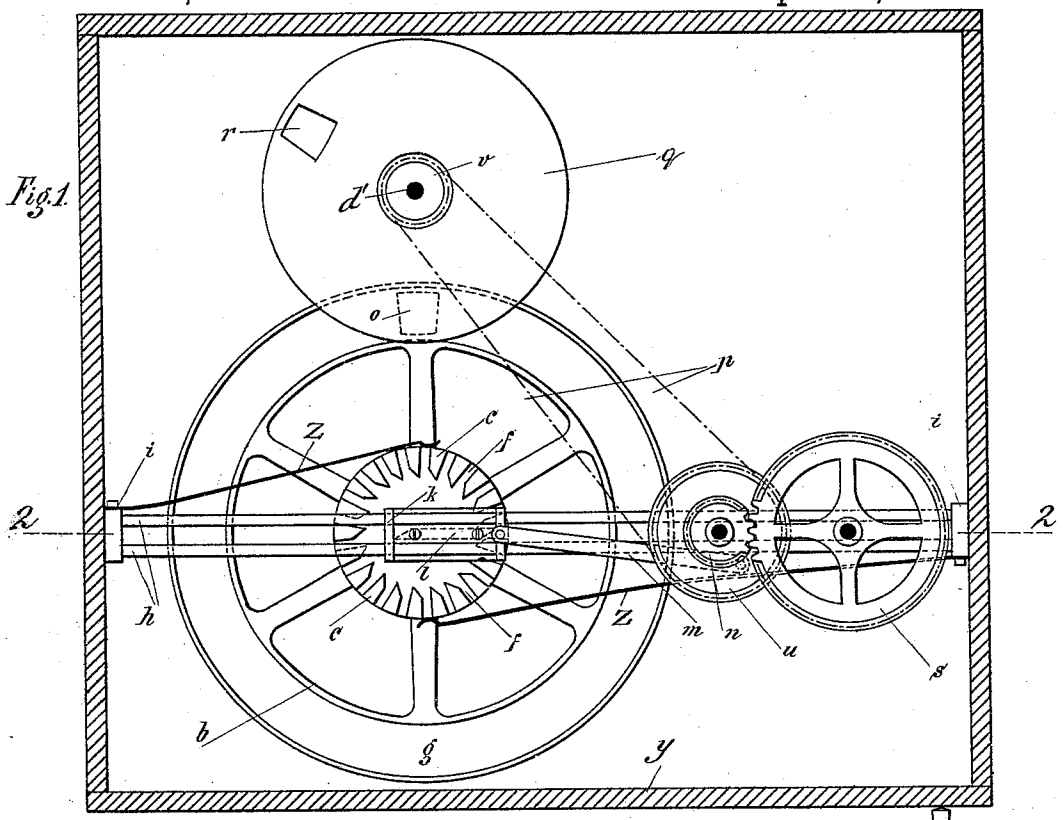

Fig. 2.

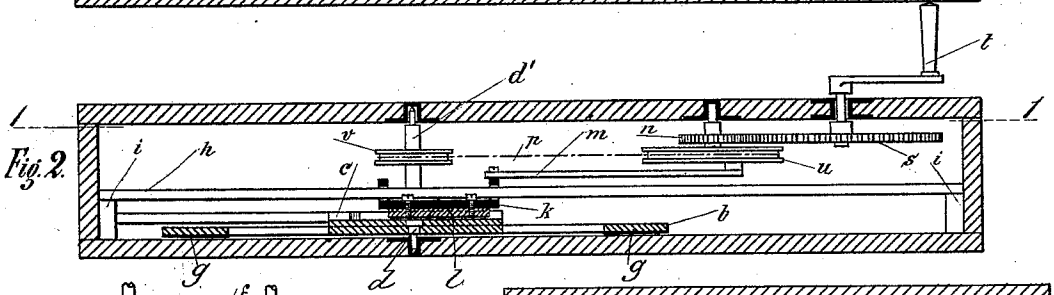

Fig. 4.

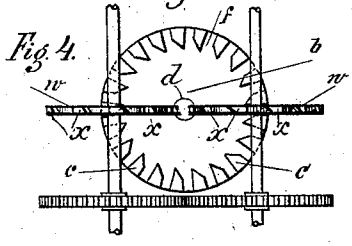

Fig. 3.

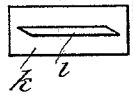

Fig. 5.

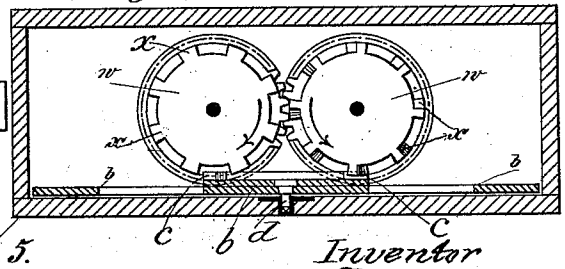

Witnesses
A. J. Schwartz
E. B. Clark

Inventor
Max Mayer
By Max Mayer
Atty.

THE NORRIS PETERS CO., PHOTO-LITHO., WASHINGTON, D. C.

(No Model.) 2 Sheets—Sheet 2.

M. MAYER.

SERIES PHOTOGRAPHIC CAMERA.

No. 525,991. Patented Sept. 11, 1894.

Fig. 1.

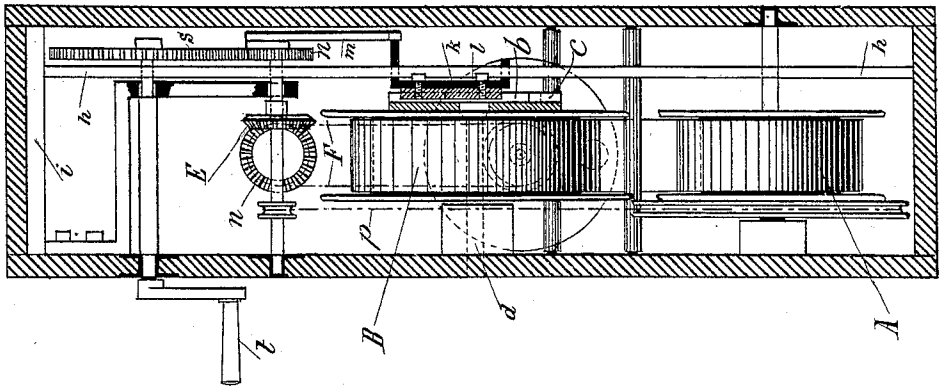

Fig. 6.

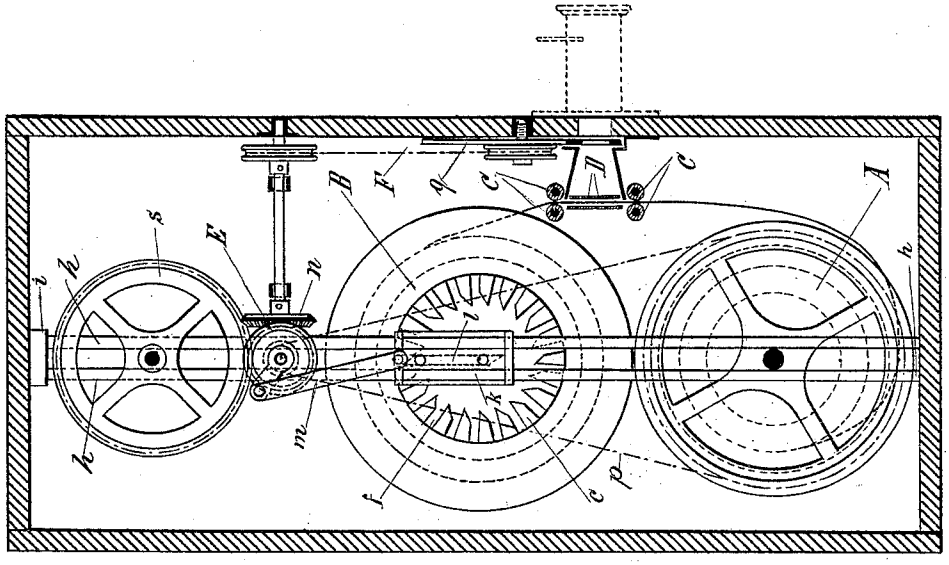

Witnesses
A. J. Schwartz
E. B. Clark

Inventor
Max Mayer
By Mayo & Fraser
Atty.

THE NORRIS PETERS CO., PHOTO-LITHO., WASHINGTON, D. C.

UNITED STATES PATENT OFFICE.

MAX MAYER, OF MUNICH, GERMANY.

SERIES PHOTOGRAPHIC CAMERA.

SPECIFICATION forming part of Letters Patent No. 525,991, dated September 11, 1894.

Application filed September 24, 1892. Serial No. 446,788. (No model.)

To all whom it may concern:

Be it known that I, MAX MAYER, a subject of the King of Bavaria, residing at Munich, Bavaria, German Empire, have invented certain new and useful Improvements in Photographic Apparatus, of which the following is a specification.

My invention relates to an improvement in photographic apparatus; and it has for its object the production of an apparatus which will photograph moving objects at short intervals of time so that the pictures when developed, if exhibited to view in a stroboscope, magic-wheel, disk or similar instrument, will represent not only the general appearance of the object photographed, but also will reproduce it as if in motion.

The invention will first be described in connection with the accompanying drawings, and then pointed out in the claims.

In the drawings,—Figure 1 is a longitudinal vertical section of an apparatus embodying my improvements, taken on the line 1—1, Fig. 2. Fig. 2 is a transverse section of the same, partly in section, taken on the line 2—2, Fig. 1. Fig. 3 is a detail view. Fig. 4 is a detail of one modification of the gearing. Fig. 5 is a plan view, partly in section, of the same. Figs. 6 and 7 are vertical sections, taken in planes at right angles to each other, of another modified form of my improved apparatus.

Referring to Figs. 1 and 2, *b* is a carrier-wheel rigidly attached to a shaft, *d*, revolubly mounted in a casing, *y*, the carrier-wheel, *b*, being provided with an integral hub having an odd number of radial wedge-shaped teeth, *c*, (in this case twenty-one) forming a crown-wheel, the inner ends of these teeth being beveled or inclined inward in the direction of rotation of the wheel, as will be fully understood from the drawings. On that side of the carrier-wheel, *b*, which faces the lens, an annular sensitive plate or sheet, *g*, is mounted.

For the purpose of intermittently rotating the carrier-wheel, *b*, I provide a reciprocating tappet, *l*, having each end beveled or inclined in the same direction for engagement with the inclined inner ends of the crown-teeth, *c*. This tappet, *l*, is secured to and carried by a cross-head, *k*, guided in slides, *h*, which are held by brackets, *i*, attached to the casing, *y*. The cross-head, *k*, and with it the tappet, *l*, is reciprocated in the slides, *h*, through the medium of a pitman, *m*, connecting it with a wrist-pin on the cog-wheel, *n*, which preferably meshes with a second cog-wheel, *s*, which may be rotated by a crank, *t*, as will be fully understood from the drawings. As the tappet, *l*, is moved to the right its right-hand inclined face engages the inner inclined end of the cog or tooth which happens to be at the extreme right-hand side of the crown-wheel or hub. The continued movement of the tappet to the right depresses the tooth, thus rotating the wheel a short distance and permitting the tappet to enter the space, *f*, between the tooth just depressed and that one immediately above it. It is plain that after the tappet has entered the space, *f*, it will move to its extreme limit at the right and back again until it has cleared the right hand teeth without rotating the wheel; but as there are an odd number of teeth in the crown-wheel, the left-hand inclined end of the tappet, in its movement to the left, will strike the inclined end of the extreme left-hand tooth, thereby forcing up the said tooth and rotating the wheel. Thus it will be seen the crown-wheel and with it the carrier-wheel, *b*, is alternately rotated and stopped.

To prevent accidental displacement of the crown-teeth, *c*, after the tappet, *l*, has released those on one side and before it has come in contact with the proper one on the opposite side, upper and lower detent-springs, *z*, are provided, these springs being secured at one end to the brackets, *i*, and arranged to bear against the crown-wheel teeth, *c*, being bent at their free ends as shown, the bend normally resting in the spaces between the teeth.

At each instant of rest of the carrier-wheel, *b*, a photographic exposure is made as hereinafter set forth, and at each partial rotation of the carrier-wheel by the tappet, *l*, a fresh section (as indicated in dotted lines at *o*) of the sensitive ring, *g*, is brought opposite the lens.

The shutter I employ consists of a rotary disk, *q*, which is operated through the medium of a pulley, *v*, on the same shaft with the shutter, driven by a chain, *p*, passing round

a pulley, *u*, fixed on the same shaft as cog-wheel, *n*, which, as before stated, is rotated by the gear wheel, *s*, and crank, *t*.

A small portion of the shutter is cut away to form an aperture, *r*, which is so arranged as to register with the lens-opening when the carrier-wheel is at rest, and to be carried out of register before the carrier-wheel is rotated by the tappet.

As shown in Figs. 4 and 5 the above apparatus may be modified by substituting for the cross-head, *k*, and slides, *h*, two tappet-wheels, *w*, revolving in opposite directions and in a plane at right angles to wheel, *b*. These wheels are provided with detents in the shape of wedge-shaped teeth, lugs, or projections, *x*, which alternately engage the teeth, *c*, and cause the same intermittent movement of the wheel, *b*, the arrangement being such that as soon as a tooth, *x*, on one wheel, *w*, has left a space, *f*, between the teeth, *c*, a lug or tooth on the other wheel engages the incline on a tooth, *c*, on the opposite side and thus turns the wheel another half-tooth.

Instead of a flat sensitive plate, a web of sensitive paper may be employed, which is intermittently carried forward opposite the lens. For this purpose the apparatus is somewhat modified as illustrated in Figs. 6 and 7. In this modification A is a reel upon which is wound the unexposed sensitive paper which is in a continuous web whose portion already exposed is wound on a bobbin, B.

In order to keep the paper flat, it is passed between two sets of guide-rolls, C, and between two glass plates, D, located between the rolls and in front of the lens, as will be plain from the drawings.

The remaining construction is the same as already described in connection with Figs. 1 to 5, except that for rotating the shutter, *q*, it is necessary to introduce a bevel-gear, E, a counter-shaft, and gearing, F, after cog-wheel, *n*. The latter, moreover, is connected by gearing with reel, A, in order to unwind the sensitized paper somewhat more rapidly than the same is wound upon reel, B, in order to prevent tearing.

Having thus described my invention, what I claim as new, and desire to secure by Letters Patent, is—

1. In a photographic apparatus, the combination, with a crown-wheel having pallet-teeth, a tappet-device actuating the pallet-teeth, and means for operating the tappet-device, of a sensitized surface support moved by the crown-wheel, and a surface exposing shutter, substantially as described and for the purpose set forth.

2. In a photographic apparatus, the combination, with a crown-wheel having pallet-teeth, a tappet-device in engagement with the pallet-teeth, and a sensitized surface support attached to the crown-wheel, of a shutter and means for simultaneously moving the shutter and actuating the tappet device, substantially as set forth.

3. In a photographic apparatus, the combination, with a crown-wheel having pallet-teeth, a tappet-device in engagement with the pallet-teeth, and a sensitized surface support attached to the crown-wheel, of a rotary shutter having an exposure-aperture, and means for simultaneously moving the shutter and actuating the tappet device, substantially as set forth.

4. The combination, with a crown-wheel having pallet-teeth, and a sensitized surface support attached to the crown-wheel, of a pair of tappet wheels revolving in opposite directions in a plane at right angles to the crown-wheel, each tappet wheel being provided with tappets arranged in contact with the pallet-teeth, and mechanism for revolving the tappet wheels substantially as described.

5. In a photographic apparatus, the combination, with a carrier wheel having a hub provided with pallet teeth, of a pair of tappet wheels revolving in opposite directions in a plane at right angles to the carrier wheel, each tappet wheel being provided with tappets arranged to contact with the pallet teeth, and mechanism for revolving the tappet wheels, whereby the carrier wheel is alternately rotated and then held stationary, substantially as described.

In testimony that I claim the foregoing as my invention I have signed my name in presence of two subscribing witnesses.

MAX MAYER.

Witnesses:

ALBERT WEICKMANN,

KARL MAYER.