(12) INTERNATIONAL APPLICATION PUBLISHED UNDER THE PATENT COOPERATION TREATY (PCT)

(19) World Intellectual Property Organization
International Bureau

(43) International Publication Date
17 April 2008 (17.04.2008)

PCT

(10) International Publication Number
WO 2008/046110 A3

(51) International Patent Classification:
A47C 21/04 (2006.01)

(21) International Application Number:
PCT/US2007/081437

(22) International Filing Date: 15 October 2007 (15.10.2007)

(25) Filing Language: English

(26) Publication Language: English

(30) Priority Data:
60/851,574 13 October 2006 (13.10.2006) US
60/971,197 10 September 2007 (10.09.2007) US

(71) Applicant *(for all designated States except US)*: **AMERIGON, INC.** [US/US]; 21680 Haggerty Road, Northville, MI 48167 (US).

(72) Inventors: **BRYKALSKI, Michael, J.**; 140A N. Alta Vista Avenue, Monrovia, CA 91016 (US). **CLARK, Jay, Christopher**; 630 West Huntington Drive, Unit #130, Arcadia, CA 91007 (US). **COMISKEY, Brian, D.**; 2848 Cox, Tustin, CA 92782 (US).

(74) Agent: **DELANEY, Karoline, A.**; Knobbe, Martens, Olson & Beae, LLP, 2040 Main Street, 14th Floor, Irvine, CA 92614 (US).

(81) Designated States *(unless otherwise indicated, for every kind of national protection available)*: AE, AG, AL, AM, AT, AU, AZ, BA, BB, BG, BH, BR, BW, BY, BZ, CA, CH, CN, CO, CR, CU, CZ, DE, DK, DM, DO, DZ, EC, EE, EG, ES, FI, GB, GD, GE, GH, GM, GT, HN, HR, HU, ID, IL, IN, IS, JP, KE, KG, KM, KN, KP, KR, KZ, LA, LC, LK, LR, LS, LT, LU, LY, MA, MD, ME, MG, MK, MN, MW, MX, MY, MZ, NA, NG, NI, NO, NZ, OM, PG, PH, PL, PT, RO, RS, RU, SC, SD, SE, SG, SK, SL, SM, SV, SY, TJ, TM, TN, TR, TT, TZ, UA, UG, US, UZ, VC, VN, ZA, ZM, ZW.

(84) Designated States *(unless otherwise indicated, for every kind of regional protection available)*: ARIPO (BW, GH, GM, KE, LS, MW, MZ, NA, SD, SL, SZ, TZ, UG, ZM, ZW), Eurasian (AM, AZ, BY, KG, KZ, MD, RU, TJ, TM), European (AT, BE, BG, CH, CY, CZ, DE, DK, EE, ES, FI, FR, GB, GR, HU, IE, IS, IT, LT, LU, LV, MC, MT, NL, PL, PT, RO, SE, SI, SK, TR), OAPI (BF, BJ, CF, CG, CI, CM, GA, GN, GQ, GW, ML, MR, NE, SN, TD, TG).

Published:
— *with international search report*

[Continued on next page]

(54) Title: AIR CONDITIONED BED

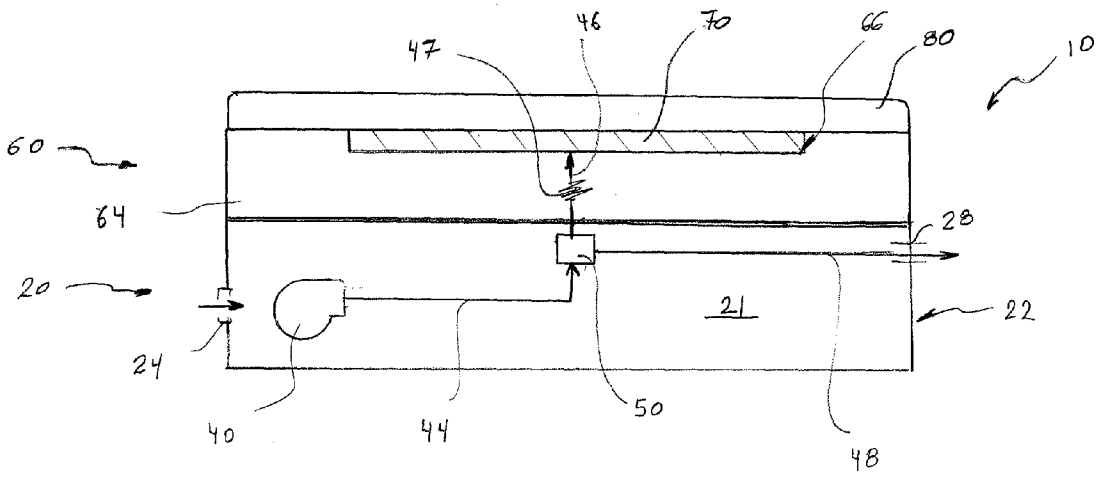

(57) Abstract: A climate controlled bed comprises a cushion member having an outer surface comprising a first side for supporting an occupant and a second side, the first side and the second side generally facing in opposite directions. In some embodiments, the cushion member includes one or more recessed areas along its first side or its second side. In one embodiment, the bed further includes a support structure having a top side configured to support the cushion member, a bottom side and an interior space generally located between the top side and the bottom side, the top side and the bottom side of the support structure generally facing in opposite directions, a flow conditioning member that may be at least partially positioned with the recessed area of the cushion member, an air-permeable topper member positioned along the first side of the cushion member and a fluid temperature regulation system.

WO 2008/046110 A3

(88) Date of publication of the international search report:
3 July 2008

INTERNATIONAL SEARCH REPORT

International application No.
PCT/US07/81437

A. CLASSIFICATION OF SUBJECT MATTER
IPC(8) - A47C 21/04 (2008.01)
USPC - 5/421
According to International Patent Classification (IPC) or to both national classification and IPC

B. FIELDS SEARCHED

Minimum documentation searched (classification system followed by classification symbols)
IPC(8) - A47C 21/04 (2008.01)
USPC - 5/421, 423

Documentation searched other than minimum documentation to the extent that such documents are included in the fields searched

Electronic data base consulted during the international search (name of data base and, where practicable, search terms used)
PatBase

C. DOCUMENTS CONSIDERED TO BE RELEVANT

Category*	Citation of document, with indication, where appropriate, of the relevant passages	Relevant to claim No.
X	US 4,423,308 A (CALLAWAY et al) 27 December 1983 (27.12.1983) entire document	1-17
A	US 5,871,151 A (FIEDRICH) 16 February 1999 (16.02.1999) entire document	1-17
A	US 2006/0137099 A1 (FEHER) 29 June 2006 (29.06.2006) entire document	1-17

☐ Further documents are listed in the continuation of Box C. ☐

* Special categories of cited documents:
"A" document defining the general state of the art which is not considered to be of particular relevance
"E" earlier application or patent but published on or after the international filing date
"L" document which may throw doubts on priority claim(s) or which is cited to establish the publication date of another citation or other special reason (as specified)
"O" document referring to an oral disclosure, use, exhibition or other means
"P" document published prior to the international filing date but later than the priority date claimed
"T" later document published after the international filing date or priority date and not in conflict with the application but cited to understand the principle or theory underlying the invention
"X" document of particular relevance; the claimed invention cannot be considered novel or cannot be considered to involve an inventive step when the document is taken alone
"Y" document of particular relevance; the claimed invention cannot be considered to involve an inventive step when the document is combined with one or more other such documents, such combination being obvious to a person skilled in the art
"&" document member of the same patent family

Date of the actual completion of the international search	Date of mailing of the international search report
09 January 2008	14 APR 2008
Name and mailing address of the ISA/US Mail Stop PCT, Attn: ISA/US, Commissioner for Patents P.O. Box 1450, Alexandria, Virginia 22313-1450 Facsimile No. 571-273-3201	Authorized officer: Blaine R. Copenheaver PCT Helpdesk: 571-272-4300 PCT OSP: 571-272-7774

Form PCT/ISA/210 (second sheet) (April 2005)