US 20070138041A1

(19) **United States**

(12) **Patent Application Publication** (10) **Pub. No.: US 2007/0138041 A1**

Welsh (43) **Pub. Date: Jun. 21, 2007**

(54) **CARRYING CASE**

(76) Inventor: **Robert P. Welsh**, Phoenix, MD (US)

Correspondence Address:
THE BLACK & DECKER CORPORATION
701 EAST JOPPA ROAD, TW199
TOWSON, MD 21286

(21) Appl. No.: **11/563,831**

(22) Filed: **Nov. 28, 2006**

Related U.S. Application Data

(60) Provisional application No. 60/751,517, filed on Dec. 19, 2005.

Publication Classification

(51) **Int. Cl.**
A45C 11/26 (2006.01)
B65D 81/02 (2006.01)

(52) **U.S. Cl.** **206/349**; 206/586

(57) **ABSTRACT**

A carrying case for carrying a portable electric power tool may have a container and a cover pivotably attached to the container. The container and/or cover may have an outer wall. A bumper may be mounted to the container and/or cover, and preferably to the outer wall thereof. A handle may be connected to the container and/or cover. The bumper serves to cushion an impact load exerted on the case if the case is dropped in an orientation in which the case strikes a hard surface.

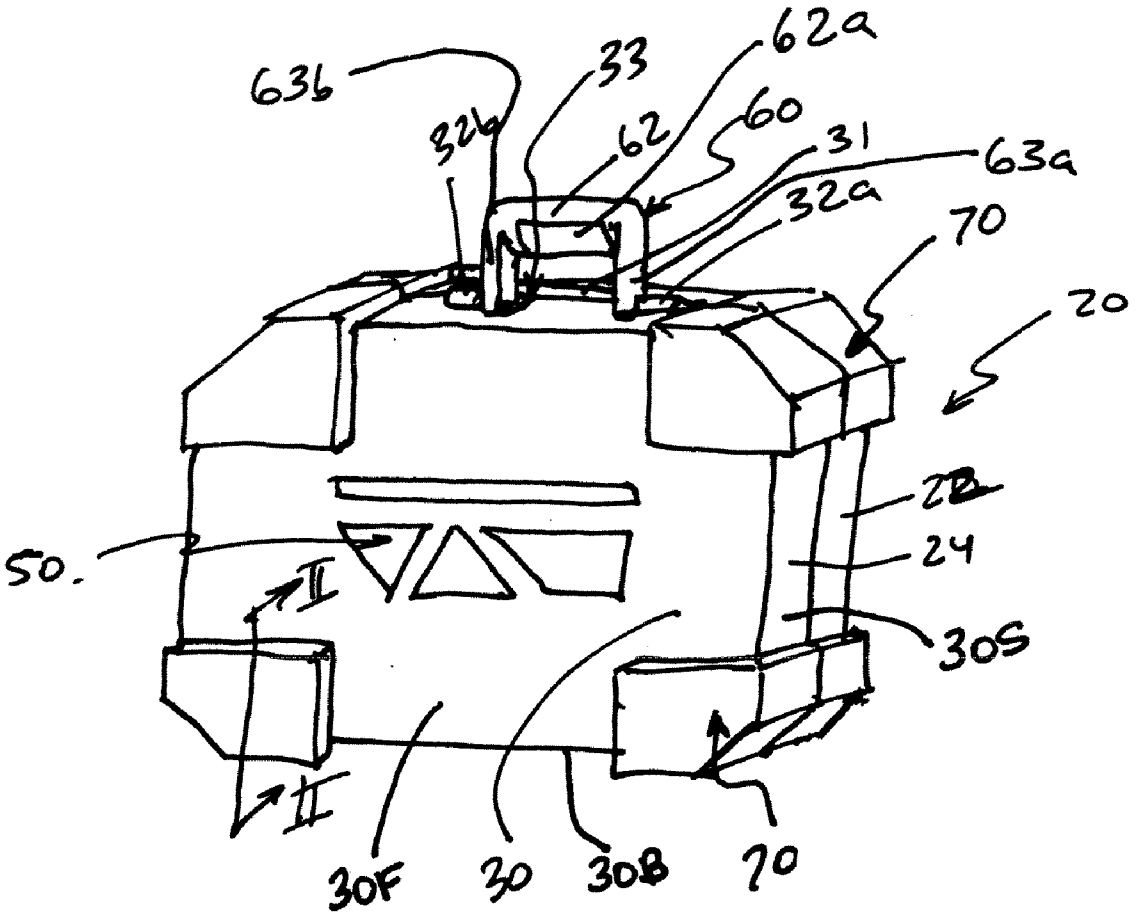

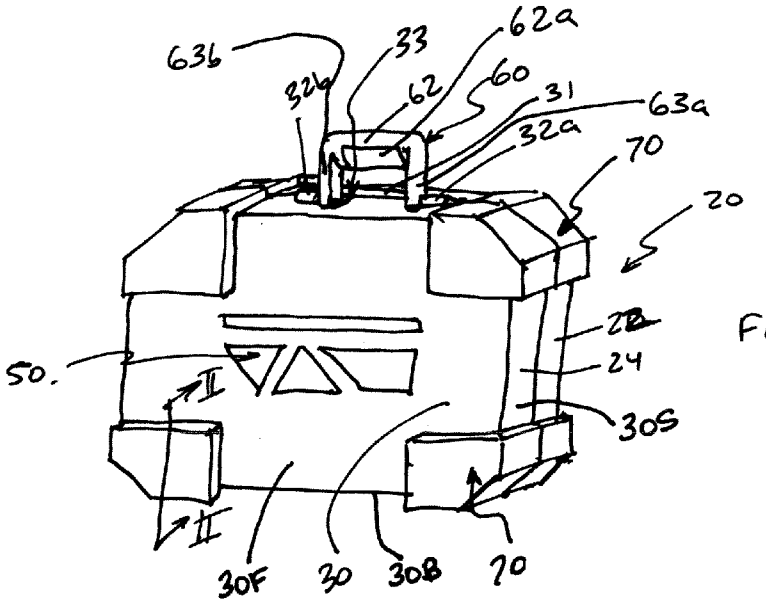

FIG. 1

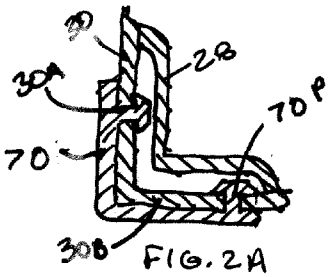

FIG. 2A

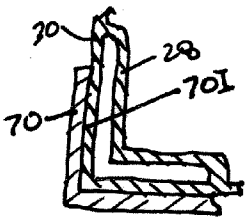

FIG. 2B

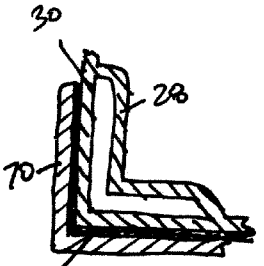

FIG. 2C

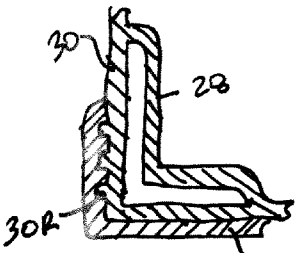

FIG. 2D

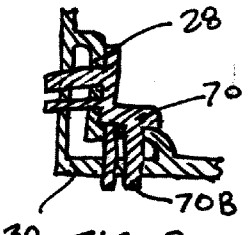

FIG. 2E

CARRYING CASE

FIELD

[0001] This specification relates to carrying cases and more specifically to blow-molded carrying cases for power tools and other products.

BACKGROUND

[0002] Blow molding is a well-known fabrication method for thermoplastic components. The process generally involves the molding of a hollow tube, or "parison," of molten thermoplastic, that is lowered from an overhanging extrusion head to a position between halves of a reciprocating mold. As the mold halves close, air or some other gas is injected into the parison; the increase in air pressure within the parison caused by such injection forces its walls into the contours of the cavities of the mold halves and thus forms the parison into a desired molded shape. The resulting component has molded walls that surround a hollow chamber. Blow molding has proven to be particularly popular for the production of large parts that would require unduly large molding injection molding machines.

[0003] One type of blow molding that has been used successfully for large components that require structural rigidity is the so-called "double-walled" blow molding process. In this process, mold halves are most often designed as distinct core and cavity halves (rather than as two cavities, as would be the case for blow-molded bottles or other containers). The core portion of the core mold half extends within the cavity as the mold halves close. In addition, the mold halves for double-walled components are configured so that the molded components have "full-perimeter flash"; i.e., after molding the component has excess material, or "flash", around the perimeter defined by mating surfaces of the mold halves. This contrasts with single-walled components, in which the parison is inflated entirely within closed mold cavities, and the molded component has flash only on its top and bottom portions. Blow-molded components have distinct inner and outer walls that surround a hollow space, with the inner wall having been formed by the core and the outer wall having been formed by the cavity, with the inner and outer walls being separated by the weld line remaining after the flash is removed. In a typical double-walled component the inner and outer walls are positioned proximate to one another and can have "pinched-off" areas, in which the inner and outer walls are contiguous.

[0004] One distinct advantage provided by double-walled blow-molded components is the capability for adjacent regions of the inner and outer walls to differ significantly in their localized contour. For example, a region of the outer wall may have a relatively flat profile, while the adjacent region of the inner wall can contain numerous projections, recesses, and the like, with the profile of either localized region failing to impact significantly the appearance or structural integrity of the other. Such differences in localized inner and outer wall contour are less likely to be successfully achieved in injection-molded components because the inclusion of substantial detail in the inner wall can have a deleterious effect on the dimensional stability, appearance, and even strength of the outer wall. Another performance advantage conveyed by double-walled components stems from the formation of the hollow chamber within the inner and outer walls, as it can provide an air cushion that protects items contacting the inner wall.

[0005] For these reasons, double-walled components have proven to be particularly popular for protective containers and carrying cases. Detailed-contour that mates with, matches, supports, or captures portions of an item, such as a power tool or instrument or item used in jobsites, to be carried within the carrying case can be included in the inner wall of the double-walled component even as the outer wall has a generally flat, appearance-sensitive surface. Further, the air cushion between the inner and outer walls helps to protect the item. Thus, the container has the detail and structure necessary to support, transport and protect the item and also provides the desired aesthetic appeal, and does so without the manufacturer having to produce two separate inner wall and outer wall parts.

SUMMARY

[0006] A carrying case for carrying a portable electric power tool is disclosed. Such case may have a container and a cover pivotably attached to the container, at least one of the container and cover having an outer wall, a bumper mounted to at least one of the container and cover, and preferably to the outer wall, and a handle connected to at least one of the container and cover, wherein the bumper serves to cushion an impact load exerted on the case if the case is dropped in an orientation in which the case strikes a hard surface. The handle may be pivotally connected to at least one of the container and cover. The outer wall may have a front, bottom and side surfaces. The bumper may be mounted to at least one of the front, bottom and side surfaces.

[0007] Additional features and benefits of the present invention are described, and will be apparent from, the accompanying drawings and the detailed description below.

BRIEF DESCRIPTION OF THE FIGURES

[0008] The accompanying drawings illustrate preferred embodiments according to the practical application of the principles thereof, and in which:

[0009] FIG. **1** is a perspective view of a carrying case according to the specification.

[0010] FIG. **2** is a view taken along lines **2-2** of FIG. **1** showing the inner walls of the carrying case cover, where FIGS. **2A-2E** show first, second, third, fourth and fifth embodiments according to the specification, respectively.

DETAILED DESCRIPTION

[0011] The present invention will now be described more fully hereinafter. This invention may, however, be embodied in many different forms and should not be construed as limited to the embodiments set forth herein; rather, these embodiments are provided so that this disclosure will be thorough and complete, and will fully convey the scope of the invention to those skilled in the art.

[0012] Referring first to FIG. **1**, a carrying case, designated broadly at **20**, comprises a container member **22** and a cover **24**. Such case **20** is described in U.S. Pat. No. 6,070,754, which is fully incorporated herein by reference.

[0013] Case **20** may include a nameplate insert **50** as described in U.S. Pat. No. 6,070,754.

[0014] The container **22** and the cover **24** are preferably double-walled blow-molded components. As used herein, a "double-walled" component is one which has been produced

by or blow molding and in which substantial portions of one wall of the component are adjacent but spaced away from substantial portions of an opposed wall. Preferably, the mold used to produce the component has distinct core and cavity halves and is configured to produce a component having the aforementioned full-perimeter flash. Persons skilled in the art will recognize that container **22** and/or cover **24** may be injection molded components. Alternatively, container **22** and/or cover **24** may be made of metal, aluminum, foam, wood, cardboard, etc.

[0015] The container **22** and cover **24** are preferably pivotally interconnected at their lower facing edges by a hinge (not shown) that enables the container **22** and cover **24** to pivot relative to one another between closed and open positions. The configuration of the hinge is not critical. An exemplary hinge suitable for interconnecting double-walled blow-molded components is illustrated in U.S. Pat. No. 5,361,456, which is hereby fully incorporated herein in its entirety. Another exemplary hinge suitable for interconnecting double-walled blow-molded components is illustrated in U.S. Pat. No. 6,315,154, which is hereby fully incorporated herein in its entirety.

[0016] The illustrated carrying case **20** preferably has a cavity therein that is configured to contain, transport, and protect a power tool, such as a power drill, but those skilled in this art will appreciate that a carrying case of the present invention can take a variety of configurations and protect any number of items, such as electronic, computer, video, or camera equipment, sales samples, and the like.

[0017] The cover **24** may be formed of a thermoplastic material, preferably polyethylene, suitable for blow-molding. Other suitable materials include propylene, polystyrene, ABS, and copolymers thereof. It is preferred that the container **22** also be formed of a thermoplastic material and have a double-walled construction, although those skilled in this art will recognize that other materials and structures are also suitable for use in the container **22**.

[0018] Inasmuch as the cover **24** is of a double-walled construction, it includes a preferably textured outer wall **30** (seen in FIG. **1**) and an inner wall **28** (seen in FIG. **2**). In the illustrated embodiment, the inner and outer walls **28**, **30** preferably have a nominal thickness of between about 0.060 and 0.090 inches, although the skilled artisan will recognize that some variation in wall thickness typically occurs in blow-molded parts. The skilled artisan will further recognize that other nominal thicknesses may also be suitable for use with this invention, particularly if the cover **24** is formed of a different thermoplastic material.

[0019] As is conventional for components of double-walled construction, over much of the expanse of the cover **24** the inner wall **28** and outer wall **30** may be adjacent to but spaced from one another. Persons skilled in the art will recognize that inner wall **28** and outer wall **30** could be at least partially contiguous. Persons skilled in the art will also recognize that container **22** could have inner and outer walls **28**, **30** as well.

[0020] At the peripheral edge of the container **22** and/or the cover **24** on the side of the container **22** and/or cover **24** opposite the hinge, the case **20** preferably includes a handle molded into container **22** and/or cover **24**, as shown in U.S. Pat. No. 6,070,754.

[0021] Alternatively, a rotatable handle **60** may be attached to case **20**, as disclosed in U.S. Pat. No. 6,381,819, which is fully incorporated herein by reference. Container **22** and/or cover **24** preferably have a handle receiving section **33** for receiving handle **60**. The handle receiving section **33** may include a central portion **31** and a pair of receptacles **32***a*, **32***b*.

[0022] The handle **60** preferably includes an elongate grip segment **62**. Extensions **63***a*, **63***b* extend from the respective ends of the grip segment **62** in a direction generally perpendicular to the longitudinal axis of the grip segment **62**. At each of the free ends of each of the extensions **63***a*, **63***b*, a respective pin (not shown) extend in both directions generally parallel to the grip segment **62**.

[0023] The handle **60** is preferably attached to the case **20** such that the ends of the pins inserted into respective pockets (not shown) of the receptacles **32***a*, **32***b*. The pins preferably fit and pivot within the pockets, thereby enabling the handle **60** to pivot relative to the case **20** about the longitudinal axes of the pockets. This configuration enables the handle **60** to be moved between a gripping position, in which the grip segment **62** is spaced apart from the case **20**, and a storage position, in which the grip segment **62** is adjacent the case **20**.

[0024] Grip segment **62** may have a portion **62***a* made of elastomer, rubber or a soft material to provide a softer grip. Such portion **62***a* may be glued on, overmolded on, molded on, welded on, mechanically attached to and/or thermically attached to grip segment **62**.

[0025] Outer wall **30** may have a front surface **30**F, bottom surface **30**B and side surface **30**S. Preferably bottom and side surfaces **3**B, **30**S contact each other and/or front surface **30**F.

[0026] It is preferable to provide a bumper **70** on at least one of the front, bottom and/or side surfaces **30**F, **30**B, **30**S. Bumper **70** is preferably a relative soft elastic bumper mounted to case **20**. The bumper **70** is preferably disposed on at least the bottom surface **30**B to protect the case **20** and/or the product carried therein by cushioning the impact load exerted on the case **20** when dropped in an orientation in which case **20** strikes a hard surface. The bumper **70** preferably extends about the outer peripheral edge of the bottom surface **30**B and overlays portions of the front and/or side surfaces **30**F, **30**S.

[0027] Any durometer of bumper **70** is contemplated. For example, the durometer may be between about 20 Shore O and about 80 Shore A. However, it is desired to provide the bumper **70** with characteristics that absorb and dampen some of the impact load and therefore a durometer of about 20 Shore A to about 75 Shore A is preferred. The durometer will be preferably dictated by the bumper thickness, the weight of case **20** and/or of the item intended to be carried therein, and the bumper contact area at the shock point.

[0028] Further information on bumper **70** and its characteristics may be found in US Published Application No. 2005/0058890 A1, which is fully incorporated herein by reference.

[0029] Referring now to FIG. **2**, a plurality of case bumper details are illustrated in partial section view, including the preferred embodiment case **20** and alternative embodiment cases, to demonstrate various manufacturing methods for affixing an elastic bumper to the corresponding plastic housing.

[0030] Referring now to FIG. **2**A, a partial cross section of the case **20** is provided to illustrate the attachment of the bumper **70** to the outer wall **30**. Specifically, outer wall **30** may be formed with a nominal wall thickness ranging from

2.5 mm to 3.5 mm. The bumper **70** is preferably over-molded onto the outer wall **30** providing a rubbery bumper with a thickness of approximately 1 mm. The outer wall **30** may include a plurality of apertures **30**A formed therethrough. As the bumper **70** is over-molded onto the outer wall **30**, a projection **70**P of the bumper **70** is formed through the aperture **30**A thereby mechanically interlocking the bumper **70** to the outer wall **30**. Alternatively, the bumper **70** and projection **70**P may be formed separately from the outer wall **30** and may be fastened thereto, such as by pressing the projection **70**P through the aperture **30**A, thereby mechanically interlocking the bumper **70** to the outer wall **30**. Of course, other common fasteners such as screws, retaining clips or the like are contemplated by the present invention.

[0031] Referring now to FIG. **2**B, an alternative bumper **70** is illustrated in accordance with the present invention. The bumper **70** may be is bonded to outer wall **30** such that an interface **70**I of the bumper **70** and outer wall **30** is completely melted together. This feature may be provided by over-molding the bumper **70** to the outer wall **30**, or co-molding the bumper **70** and outer wall **30**. The bumper **70** may be is approximately 1.5 mm to 2 mm in thickness in order to obtain the desired protection characteristics and satisfy the manufacturing requirements.

[0032] Persons skilled in the art will recognize that bumper **70** may also be created by spraying a liquid elastomeric material onto the outer wall **30** to cure and form the bumper **70**. The material of such bumper **70** may be formed from either a regular soft touch paint or a foam type rubbery paint having a thickness of 0.3 mm or greater. The material of the bumper **70** may also include an agent for causing a chemical reaction with the exterior of the outer wall **30** creating a bond upon curing to secure the bumper **70** to the outer wall **30**.

[0033] Alternatively, bumper **70** may be formed from a liquid elastomeric material, preferably molten rubber, where the outer wall **30** is dipped partially therein. The outer wall **30** may receive a layer of rubber material that either melts with or cures to an interface **701** with the outer wall **30** thereby creating the bumper **70**.

[0034] Referring now to FIG. **2**C, an alternative bumper **70** may be affixed to outer wall **30** by an adhesive **72** dispensed therebetween. The adhesive **72** and bumper **70** may be affixed to the outer wall **30** in a progressive molding operation or by assembly of separate components. The bumper **70** is preferably formed with a thickness of at least approximately 1 mm.

[0035] Referring now to FIG. **2**D, another alternative bumper **70** may be affixed to the outer wall **30** through frictional engagement therebetween. Thus, the bumper **70** is preferably formed separately from the outer wall **30** and is pressed thereon in an assembly operation. Outer wall **30** may further include a plurality of external ribs **30**R formed thereabout for enhancing the frictional engagement within the bumper **70**. Additionally, the external ribs **30**R may be barbed in a direction corresponding to the direction in which the bumper **70** is pressed thereon to prevent removal of the bumper **70** from the outer wall **30**. Alternatively, the ribs **30**R may be provided about the outer wall **30** and the bumper **70** may be molded thereto for mechanical interlocking engagement with the ribs **30**R. Bumper **70** is preferably at least approximately 1 mm thick.

[0036] Referring to FIG. **2**E, an alternative bumper **70** may have protrusions **70**B that extend through inner and/or outer walls **28**, **30**. Bumper **70** may be inserted from the inside of case **20**, so that protrusions **70**B extend through inner and outer walls **28**, **30**. Any method of affixing bumper **70**, including any of the methods described above, can be used to affix bumper **70** to inner wall **28**. Persons skilled in the art will recognize that bumper **70** may be disposed between inner and outer walls **28**, **30**, so that protrusions **70**B extend only through outer wall **30**.

[0037] Persons skilled in the art will recognize other possible benefits to providing case **20** with bumper(s) **70**. Bumper **70** may prevent case **20** from sliding along a surface, or may provide the user with a better or alternate grip. To these ends, bumper **70** may be shaped in order to meet ergonomic or functional requirements. Bumper **70** may also provide aesthetic variations to case **20**, such color breaks, shapes, etc. To these ends, bumper **70** may be shaped or colored in order to meet aesthetic requirements.

[0038] While embodiments of the invention have been illustrated and described, it is not intended that these embodiments illustrate and describe all possible forms of the invention. Rather, the words used in the specification are words of description rather than limitation, and it is understood that various changes may be made without departing from the spirit and scope of the invention.

What is claimed is:

1: A carrying case for carrying a portable electric power tool comprising:
- a container;
- a cover pivotably attached to the container;
- at least one of the container and cover have an outer wall;
- a bumper mounted to at least one of the container and cover; and
- a handle connected to at least one of the container and cover;
- wherein the bumper serves to cushion an impact load exerted on the case if the case is dropped in an orientation in which the case strikes a hard surface.

2: The case of claim **1**, wherein the bumper is mounted to the outer wall.

3: The case of claim **1**, wherein the handle is pivotally connected to at least one of the container and cover.

4: The case of claim **1**, wherein the outer wall has a front, bottom and side surfaces.

5: The case of claim **4**, wherein the bumper is mounted to at least one of the front, bottom and side surfaces.

6: The case of claim **1**, wherein at least one of the container and cover is made of a thermoplastic material.

7: The case of claim **1**, wherein the bumper has a durometer rating between about 20 Shore O and about 80 Shore A.

8: The case of claim **1**, wherein the bumper has a durometer rating between about 20 Shore A and about 75 Shore A.

9: The case of claim **1**, wherein the bumper is overmolded onto the outer wall.

10: The case of claim **1**, wherein the bumper is bonded to the outer wall.

11: The case of claim **1**, wherein the bumper is affixed to the outer wall.

* * * * *