(12) INTERNATIONAL APPLICATION PUBLISHED UNDER THE PATENT COOPERATION TREATY (PCT)

(19) World Intellectual Property Organization
International Bureau

(43) International Publication Date
02 January 2020 (02.01.2020)

WIPO | PCT

(10) International Publication Number
WO 2020/005796 A1

(51) International Patent Classification:
H02M 1/42 (2007.01) *G01R 19/04* (2006.01)

(21) International Application Number:
PCT/US2019/038650

(22) International Filing Date:
24 June 2019 (24.06.2019)

(25) Filing Language: English

(26) Publication Language: English

(30) Priority Data:
62/691,121 28 June 2018 (28.06.2018) US
16/214,770 10 December 2018 (10.12.2018) US

(71) Applicant: **TEXAS INSTRUMENTS INCORPORATED** [US/US]; P.O. Box 655474, Mail Station 3999, Dallas, TX 75265-5474 (US).

(71) Applicant *(for JP only)*: **TEXAS INSTRUMENTS JAPAN LIMITED** [JP/JP]; 24-1, Nishi-Shinjuku 6-chome, Shinjuku-ku, Tokyo 160-8366 (JP).

(72) Inventors: **FRANKE, Maxim, James**; 300 N Akard St., Apt. 707, Dallas, TX 75201 (US). **HANSCHKE, Michael, Ryan**; 14332 Montfort Dr., Apt.4209, Dallas, TX 75254 (US). **AMOROSO, Antonio**; Via San Paolo N. 20, 95030 Tremestieri Etneo (CT) (IT). **STRACQUADAINI, Rosario**; Viale Europa N. 81, 95027 San Gregorio di Catania (CT) (IT).

(74) Agent: **ABRAHAM, Ebby** et al.; Texas Instruments Incorporated, P. O. Box 655474, Mail Station 3999, Dallas, TX 75265-5474 (US).

(81) Designated States *(unless otherwise indicated, for every kind of national protection available)*: AE, AG, AL, AM, AO, AT, AU, AZ, BA, BB, BG, BH, BN, BR, BW, BY, BZ,

(54) Title: PEAK DETECTION METHODS, APPARATUS, AND CIRCUITS

FIG. 2

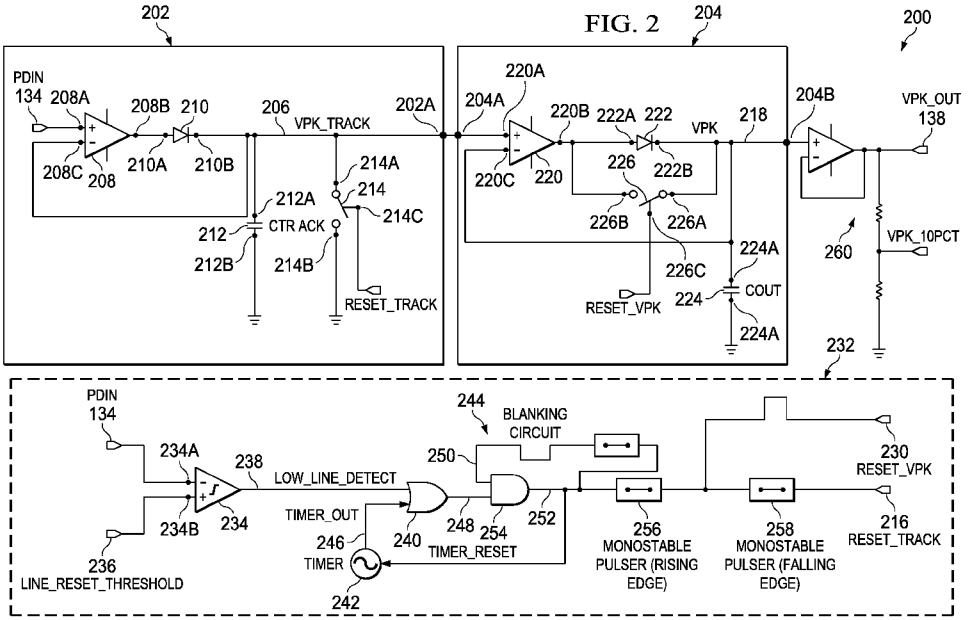

(57) Abstract: Peak detection methods, apparatus, and circuits are disclosed. An example peak detector (200) includes a first peak-hold circuit (202) having a first input terminal and a first output terminal (202A), the first peak-hold circuit (202) to determine a first peak of a rectified input voltage (134) at the first input terminal during a first time interval, and to track a second peak of the rectified input voltage (134) during a second time interval, the second time interval distinct from the first time interval, and a second peak-hold circuit (204) having a second input terminal (204A) and a second output terminal (204B), the second peak-hold circuit (204) to determine, during the second time interval, a greater of the first peak and the second peak, the first output terminal (202A) coupled to the second input terminal (204A), the greater of the first peak and the second peak output at the second output terminal (204A).

WO 2020/005796 A1

[Continued on next page]

CA, CH, CL, CN, CO, CR, CU, CZ, DE, DJ, DK, DM, DO, DZ, EC, EE, EG, ES, FI, GB, GD, GE, GH, GM, GT, HN, HR, HU, ID, IL, IN, IR, IS, JO, JP, KE, KG, KH, KN, KP, KR, KW, KZ, LA, LC, LK, LR, LS, LU, LY, MA, MD, ME, MG, MK, MN, MW, MX, MY, MZ, NA, NG, NI, NO, NZ, OM, PA, PE, PG, PH, PL, PT, QA, RO, RS, RU, RW, SA, SC, SD, SE, SG, SK, SL, SM, ST, SV, SY, TH, TJ, TM, TN, TR, TT, TZ, UA, UG, US, UZ, VC, VN, ZA, ZM, ZW.

(84) **Designated States** *(unless otherwise indicated, for every kind of regional protection available)*: ARIPO (BW, GH, GM, KE, LR, LS, MW, MZ, NA, RW, SD, SL, ST, SZ, TZ, UG, ZM, ZW), Eurasian (AM, AZ, BY, KG, KZ, RU, TJ, TM), European (AL, AT, BE, BG, CH, CY, CZ, DE, DK, EE, ES, FI, FR, GB, GR, HR, HU, IE, IS, IT, LT, LU, LV, MC, MK, MT, NL, NO, PL, PT, RO, RS, SE, SI, SK, SM, TR), OAPI (BF, BJ, CF, CG, CI, CM, GA, GN, GQ, GW, KM, ML, MR, NE, SN, TD, TG).

Declarations under Rule 4.17:

— *as to applicant's entitlement to apply for and be granted a patent (Rule 4.17(ii))*

— *as to the applicant's entitlement to claim the priority of the earlier application (Rule 4.17(iii))*

Published:

— *with international search report (Art. 21(3))*

PEAK DETECTION METHODS, APPARATUS, AND CIRCUITS

[0001] This relates generally to peak detectors, and, more particularly, to peak detection methods, apparatus, and circuits.

BACKGROUND

[0002] Power factor correction (PFC) controllers for alternating current (AC) to direct current (DC) converters detect peak voltages on an AC rectified line and adjust the charging time of an output power stage to compensate for AC line voltage changes. The goal of PFC is to match the power consumption measured by an AC supply with the power actually consumed by a DC load. PFC controllers use the detected peaks to shape the current supplied to the DC load, so the DC load appears substantially real (e.g., substantially resistive) to the AC supply.

BRIEF DESCRIPTION OF THE DRAWINGS

[0003] FIG. 1 illustrates an example PFC controller having a peak detector constructed in accordance with teachings of this disclosure and shown in an example power converter.

[0004] FIG. 2 is a diagram of an example peak detector circuit that may be used to implement the example peak detector of FIG. 1.

[0005] FIG. 3 is a flowchart of example machine-readable instructions, an example hardware implemented state machine, or hardware logic for the example control signal generator circuit of FIG. 2.

[0006] FIG. 4 is a graph showing signals during example operations of the example peak detector of FIG. 2.

[0007] FIG. 5 illustrates an example automatic gain control (AGC) circuit having a peak detector constructed in accordance with teachings of this disclosure.

[0008] FIG. 6 is a graph illustrating signals during an example application of the AGC circuit of FIG. 5 to an example radio frequency (RF) signal.

[0009] FIG. 7 is a diagram of another example peak detector topology that may be used with the example peak detector circuit of FIG. 2.

[0010] In general, the same reference numbers will be used throughout the drawing(s) and accompanying written description to refer to the same or like parts. Connecting lines or

connectors shown in the various figures presented are intended to represent example functional relationships and/or physical or logical couplings between the various elements.

DETAILED DESCRIPTION OF EXAMPLE EMBODIMENTS

[0011] Adjustment of the charging time of the power stage of an AC-to-DC power converter to compensate for line voltage changes is referred to as line voltage feed forward of PFC. The effectiveness of line voltage feed forward strongly depends on the accuracy of peak detection for the line voltage. Example digital solutions perform peak detection by digitizing an input line voltage. Once the input line voltage is digitally captured, digital comparators and memory registers can be used to determine the feed forward signal. Prior digital solutions are complex, relying on high-resolution analog-to-digital converters (ADCs), low-resolution non-linear ADCs, high-fidelity sampling techniques/circuits, precision comparators, digital decoders, etc. that have significant area, accuracy, complexity, etc. requirements. Additional prior solutions use complex filters to convert an input line voltage to a ramp signal that controls a pulse width modulator (PWM).

[0012] Disclosed herein are cost-efficient, simple line voltage peak detection methods, apparatus, systems and circuits that overcome at least the deficiencies and complexities of digital and filter-based solutions. The disclosed line voltage peak detection methods, apparatus, systems and circuits are able to track positive line transients (e.g., as they occur), and sense and track negative line transients within three-quarters of a wave cycle. A three-quarters wave cycle refers the portion of an AC signal falling between a zero crossing and the peak following the next zero crossing. Disclosed examples track positive line transients by generally, closely, immediately, instantaneously, substantially, effectively, essentially, etc. tracking the shape and characteristics of positive line transients, ignoring incidental processing time, incidental signal propagation time, etc. The disclosed methods, apparatus, systems and circuits realize precise, fast and responsive line voltage feed forward for AC-to-DC converters that compensate for positive line voltage transients, reduce (e.g., minimize) the impact of negative line voltage transients, and/or compensate for asymmetric peaks that may occur during full wave cycles. Positive line voltage transients may result in damage in the power stage and/or circuits connected to the regulated output. While negative line voltage transients may result in a longer undershoot of the regulated output, they are generally more acceptable as they are not associated with damage.

[0013] Reference will now be made in detail to non-limiting examples, some of which are illustrated in the accompanying drawings.

[0014] FIG. 1 is a diagram of an example power converter 100 having an example AC-to-DC power conversion circuit 102. The example AC-to-DC power conversion circuit 102 includes an example AC-to-DC converter circuit 104, and an example PFC circuit 106. The example PFC circuit 106 has an input terminal 106A and an output terminal 106B. The input terminal 106A of the PFC circuit 106 is connected to (e.g., coupled to directly and/or indirectly) an output terminal 108A of an example rectifier 108 of the AC-to-DC converter circuit 104. The output terminal 106B of the PFC circuit 106 is connected to a terminal 110A of a load 110 to which the AC-to-DC power conversion circuit is supplying DC power. Another terminal 110B of the load 110 is connected to ground.

[0015] The example rectifier 108 of FIG. 1 converts an AC input line voltage V_{IN_LINE} 112 across input terminals 112A and 112B of the AC-to-DC power conversion circuit 102 to a rectified input line voltage V_{IN} 114 (e.g., a rectified AC input line voltage) across the output terminal 108A of the rectifier 108 and a ground terminal 116. The PFC circuit 106 forms an output voltage V_{OUT} 118 across a capacitor 120 from the rectified input line voltage V_{IN} 114.

[0016] To improve the quality of the output voltage V_{OUT} 118 generated by the AC-to-DC power conversion circuit 102, the example power converter 100 of FIG. 1 includes an example PFC controller 122. The example PFC controller 122 controls the example PFC circuit 106 to increase the power factor of the power converter 100. The power factor of an AC electrical power system refers to the ratio of the real power (e.g., defined as the average value of the electrical power input in the system over one line cycle) to the apparent power (e.g., defined as the product of input voltage RMS value and the input current RMS value to the power system), and is a dimensionless number in the closed interval of 0 to 1. In an electric power system, a load with a low power factor draws more current than a load with a high power factor for a given amount of useful power transferred.

[0017] The example PFC controller 122 of FIG. 1 turns a switch 124 of the PFC circuit 106 off and on with a varying duty cycle to form an AC input current 126 that is sinusoidal and in phase with the AC input voltage V_{IN_LINE} 112. When the AC input current 126 is sinusoidal and in phase with the AC input voltage V_{IN_LINE} 112, the load 110 appears to a source of the AC input voltage V_{IN_LINE} (e.g., a power company) as a purely real load and, thus, power can be provided to the load 110 with a high power factor. In some examples, the example PFC controller 122 is implemented using one or more analog circuits.

[0018] In operation, the PFC controller 122 cycles the PFC circuit 106 between two states. The first state occurs when the PFC controller 122 closes the switch 124 (e.g., turns on a field effect transistor (FET)). In this state, an example inductor 128 is energized via the rectifier

108, thereby an inductor current 130 flowing through the inductor 128 increases. At the same time, a diode 132 becomes reverse biased (because its anode terminal 132A is connected to the ground), thereby energy is provided to the load 110 by the capacitor 120. In a second state, the PFC controller 122 opens the switch 124 (e.g., turns off the FET). In this state, the inductor 128 de-energizes and the inductor current 130 decreases as the inductor 128 supplies energy to the load 110 and for recharging the capacitor 120.

[0019] The example PFC controller 122 of FIG. 1 controls the cycling of the PFC circuit 106 between the above-described two states. Cycling back and forth between the states is done rapidly (e.g., at a high frequency such as tens or hundreds of kilohertz (kHz)) and in a manner that controls the power factor of the power converter 100 by maintaining an output voltage V_{OUT} 118 that is constant and controls an average of the inductor current 130, and subsequently an average of the AC input current 126.

[0020] Because the inductor current 130 is increasing in the first state and decreasing in the second state, the duty cycle at which the PFC controller 122 opens and closes the switch 124 determines the amount of time the inductor current 130 flowing through the inductor 128 is increasing, versus the amount of time the inductor current 130 flowing through the inductor 128 is decreasing. By varying the duty cycle at which the switch 124 operates, the PFC controller 122 can control an average of the inductor current 130. By controlling an average of the inductor current 130 to track the expected current consumed by the load 110, the power factor and total harmonic distortion (THD) can be significantly improved. For an ideal system, the inductor current 130 is a rectified sine wave, the AC input current 126 is a sine wave, and the inductor current 130 and the AC input current 126 are phased to match each other and VIN_LINE. The purpose of the PFC is to make the shape and magnitude of the load not impact the phasing of the AC input current124 and the inductor current 130. A DC load for example has no “phase”.

[0021] To detect and track peaks and sense negative transients of a peak detector input voltage PDIN (e.g., a waveform, a signal, etc.) on a line 134, the example PFC controller 122 of FIG. 1 includes a peak detector 136. As described in more detail below in connection with FIG. 2, the example peak detector 136 generates an output voltage VPK_OUT on a line 138 that immediately tracks peaks of the peak detector input voltage PDIN on the line 134, and tracks reduction of magnitude of peak detector input voltage PDIN on the line 134 within a time interval corresponding to a half wave cycle plus a quarter of a line cycle of the AC input line voltage V_{IN_LINE} 112.

[0022] To generate a control signal on the line 140 for the switch 124, the example PFC controller 122 of FIG. 1 includes an example switch on_off controller 142 that generates the control signal on the line 140 based on peaks detected by the peak detector 136. The example switch on_off controller 142 generates the control signal on the line 140 to have a pulse width PW, which can be expressed mathematically as

$$PW = ton\_constant * COMP / VPK\_OUT^2, \text{ where:}$$

- the pulse width PW is measured in time in seconds,
- ton_constant is a constant that converts COMP / VPK_OUT^2 in units of Volts*seconds to time in seconds,
- COMP is a voltage on a terminal 144, and
- the output voltage VPK_OUT on the line 138 is determined by the peak detector.

The time from one pulse to the next pulse (switching period) can vary according to how the PFC controller 122 works. In some examples, a fixed switching period based on a controller's internal oscillator (e.g., a controller that implements a continuous conduction Mode (CCM)). Switching period can change cycle-by-cycle if different control strategies are used. For example, in a transition mode (TrM), the switch 124 is turned on when inductor currents decay to zero. In some examples, an error amplifier (e.g., internal to the PFC controller 122) compares a voltage proportional to the output voltage VOUT on the load 110, with a reference (e.g., internal to the PFC controller 122) and increases COMP if the voltage proportional to VOUT on the line is below the reference, and decreases COMP if the voltage proportional to VOUT on the line is above the reference. In some examples, COMP is changed slowly enough that it can be considered constant over a line cycle.

[0023] While an example manner of implementing the power converter 100 is illustrated in FIG. 1, one or more of the elements, processes and/or devices illustrated in FIG. 1 may be combined, divided, re-arranged, omitted, eliminated and/or implemented in any other way. Further still, the example power converter 100 of FIG. 1 may include one or more elements, processes and/or devices in addition to, or instead of, those illustrated in FIG. 1, and/or may include more than one of any or all of the illustrated elements, processes and devices. As used herein, the phrase "in communication," including variations thereof, encompasses direct communication and/or indirect communication through one or more intermediary components, and does not require direct physical (e.g., wired) communication and/or constant communication, but rather additionally includes selective communication at periodic intervals, scheduled intervals, aperiodic intervals, and/or one-time events.

[0024] FIG. 2 is a diagram of an example peak detector 200 (e.g., peak detector circuit) that may be used to implement the example peak detector 136 of FIG. 1. To track the peak detector input voltage PDIN on the line 134, the example peak detector 200 includes example peak detector circuits 202 and 204. The example peak detector circuits 202 and 204 of FIG. 1 are analog peak-hold circuits that are connected in a pipeline, serial, etc. configuration. An output terminal 202A of the peak detector circuit 202 is connected to an input terminal 204A of the peak detector circuit 204.

[0025] The first peak detector circuit 202 of FIG. 2 includes an example analog peak-hold circuit that continuously tracks the highest peak of the peak detector input voltage PDIN on the line 134 for the current half wave cycle as an example voltage VPK_TRACK on a line 206. The example peak detector circuit 202 includes an example operational amplifier 208 having a first input terminal 208A connected the peak detector input voltage PDIN on the line 134, and having an output terminal 208B connected to a terminal 210A of an example diode 210. Another terminal 210B of the diode 210 is connected to a second input terminal 208C of the operational amplifier 208, is connected to a terminal 212A of an example capacitor CTRACK 212, and is connected to the output terminal 202A of the peak detector circuit 202. Another terminal 212B of the capacitor CTRACK 212 is connected to ground. A terminal 214A of a switch 214 is connected to the terminal 210B of the diode 210, and a second terminal 214B of the switch 214 is connected to ground.

[0026] The example peak detector circuit 202 tracks and holds the highest peak of the peak detector input voltage PDIN on the line 134 as the voltage VPK_TRACK on the line 206. The peak is held until an example reset signal RESET_TRACK on a line 216, which is connected to a control terminal 214C of the switch 214, closes the example switch 214, thereby discharging the example capacitor CTRACK 212 and resetting the output voltage VPK_TRACK on the line 206 to, for example, a small or minimal value (e.g., zero). In tracking operation, the peak detector input voltage PDIN on the line 134 charges the capacitor CTRACK 212, and the example diode 210 prevents the capacitor CTRACK 212 from discharging. If the peak detector input voltage PDIN on the line 134 increases further, the capacitor CTRACK 212 is further charged to the higher voltage. If the peak detector input voltage PDIN on the line 134 decreases below the previous peak value, the voltage on the capacitor CTRACK 212 stays at the previous peak value.

[0027] The second peak detector circuit 204 of FIG. 2 is another example analog peak-hold circuit that continuously tracks the greater, larger, etc. of: (a) the peak VPK_TRACK on the line 206 of the current half wave voltage as tracked by the first peak detector circuit 202), and

(b) the peak of the previous half wave cycle held as a voltage VPK on a line 218 by the second peak detector circuit 204. The example peak detector circuit 204 includes an example operational amplifier 220 having a first input terminal 220A connected the input terminal 204A of the peak detector circuit 204, and having an output terminal 220B connected to a terminal 222A of an example diode 222. Another terminal 222B of the diode 222 is connected to a second input terminal 220C of the operational amplifier 220, is connected to a terminal 224A of an example capacitor COUT 224, and is connected to an output terminal 204B of the peak detector circuit 204. Another terminal 224B of the capacitor COUT 224 is connected to ground. A first terminal 226A of a switch 226 is connected to the terminal 222B of the diode 222, and a second terminal 226B of the switch 226 is connected to the terminal 222A of the diode 222.

[0028] At half wave line cycle transitions, a reset signal RESET_VPK on the line 230, which is connected to the terminal 226C of the switch 226, causes the example switch 226 to close, thereby bypassing the example diode 222 to allow the voltage VPK_TRACK on the line 206 (even if lower than the voltage VPK on the line 218) to be buffered and held as the voltage VPK on the line 218. That is the output voltage VPK on the line 218 of the peak detector circuit 204 is set to the output voltage VPK_TRACK on the line 206 of the peak detector circuit 202. The reset signal RESET_VPK on the line 230 for the second peak detector circuit 204 occurs prior to the reset signal RESET_TRACK on the line 216 for the first peak detector circuit 202. Thereby, the peak voltage VPK_TRACK on the line 206 for the current half wave cycle is transferred from the first peak detector circuit 202 to the second peak detector circuit 204 as the voltage VPK on the line 218 prior to the voltage VPK_TRACK on the line 206 being reset at the first peak detector circuit 202. To generate control signals for the peak detector circuits 202 and 204, the example peak detector 200 includes an example control signal generator circuit 232. The example control signal generator circuit 232 generates the reset signal RESET_TRACK 216 and the reset signal RESET_VPK on the line 230.

[0029] To determine whether to start resets of the peak detector circuits 202 and 204, the example control signal generator circuit 232 of FIG. 2 includes an example comparator 234 that compares the peak detector input voltage PDIN on the line 134 on a first input 234A of the comparator 234 to a threshold LINE_RESET_THRESHOLD on a line 236 at a second input 234B of the comparator 234. Near the end of each half wave cycle, the peak detector input voltage PDIN on the line 134 will nominally satisfy the threshold LINE_RESET_THRESHOLD on the line 236 by falling below the threshold

LINE_RESET_THRESHOLD on the line 236, thereby causing a logic rising edge on an output LOW_LINE_DETECT on a line 238 by the comparator 234.

[0030] The value of LINE_RESET_THRESHOLD on the line 236 is selected to detect a zero crossing. Additionally, and/or alternatively, the value of LINE_RESET_THRESHOLD on the line 236 could be proportional to (e.g., be ten percent of) the most recent output voltage VPK_OUT on the line 138 as generated by, for example, a voltage divider 260. Use of a proportional threshold LINE_RESET_THRESHOLD on the line 236 will result in the peak detector 200 updating at a consistent time proportional to the peak of the peak detector input voltage PDIN on the line 134 during steady state, leading to more predictable behavior.

[0031] To determine when to start resets of the peak detector circuits 202 and 204, the example control signal generator circuit 232 of FIG. 2 includes an example OR gate 240, an example timer 242, and an example blanking circuit 244. The OR gate 240 computes a logic OR of the output LOW_LINE_DETECT on the line 238 by the comparator 234 and an output 246 of the timer 242. An output 248 of the OR gate 240 is a logic HIGH when either the output LOW_LINE_DETECT on the line 238 is a logic HIGH or the output 246 of the timer 242 is a logic HIGH signifying the timer 242 expired. In some examples, the maximum line period for public mains is 21.3 milliseconds (ms), and the timer 242 counts a time period that is larger than the maximum line half period. Accordingly, in the illustrated example, the timer 242 ensures the peak detector circuits 202 and 204 are reset at least every twelve milliseconds (12ms). In some applications, input AC voltage can have a different period (e.g., in airplanes where the period is generally 2.5ms) so in this case we can select shorter time for the timer 242 (e.g., 2.6ms)

[0032] During a blanking interval (e.g., a logic LOW portion of an output on the line 250 of the blanking circuit 244), the peak detector circuits 202 and 204 are prevented from being reset. A logic LOW on the output on the line 250 prevents an output 252 of a logic AND gate 254 from transitioning from a logic LOW to a logic HIGH. The blanking interval prevents resets of the peak detector circuits 202 and 204 from occurring too close together. At the end of a blanking interval and if either the LOW_LINE_DETECT on the line 238 is logic HIGH or the timer 242 has expired, a logic rising edge occurs on the output 252 of the logic AND gate 254. The logic rising edge on the output of the logic AND gate 254 resets the timer 242.

[0033] To create the reset signal RESET_TRACK on the line 216 and the reset signal RESET_VPK on the line 230, the example control signal generator circuit 232 includes a first example pulse generator 256 (e.g., a rising edge monostable pulser), and a second pulse generator 258 (e.g., a falling edge monostable pulser). When a rising edge occurs on the

output 252 of the logic AND gate 254, the pulse generator 256 sets the reset signal RESET_VPK on the line 230 to high, thereby closing switch 226 for a time duration of TIME2, which sets the voltage VPK on the line 218 equal to the voltage VPK_TRACK on the line 206. When a logic falling edge occurs on the reset signal RESET_VPK on the line 230, the second pulse generator 258 sets the reset signal RESET_TRACK on the line 214 to high, thereby closing the switch 214 for a time duration of TIME1, which resets the voltage on the line VPK_TRACK 206 to zero.

[0034] A flowchart representative of example hardware logic, hardware implemented state machine, and/or any combination thereof for implementing the control signal generator circuit 232 of FIG. 2 is shown in FIG. 3. Although the example hardware logic, hardware implemented state machines is described with reference to the flowchart illustrated in FIG. 3, many other methods of implementing the example control signal generator circuit 232 may alternatively be used. For example, the order of execution of the blocks may be changed, and/or some of the blocks described may be changed, eliminated, or combined. Additionally, and/or alternatively, any or all of the blocks may be implemented by one or more hardware circuits (e.g., discrete and/or integrated analog and/or digital circuitry, a field programmable gate array (FPGA), an application specific integrated circuit (ASIC), a comparator, an operational-amplifier (op-amp), a logic circuit, etc.), a processor.

[0035] The example hardware implemented state machine of FIG. 3 begins with waiting for the peak detector input voltage PDIN on the line 134 to satisfy a threshold (e.g., to fall below the threshold LINE_RESET_THRESHOLD on the line 236) causing a rising edge on the output LOW_LINE_DETECT on the line 238 (block 302), or the timer 242 (e.g., a 12ms timer) to expire (block 304). If the first of these two events (e.g., as determined by the OR gate 240) occurs during a blanking interval (e.g., as determined by the blanking circuit 244) (block 306), it is ignored, waiting for the other event.

[0036] If the first of the two events occurs outside a blanking interval (e.g., 12ms), a refresh sequence of the peak detectors 202 and 204 is carried out. The example pulse generator 256 (e.g., a rising edge monostable pulser) sets the reset signal RESET_VPK on the line 230 to high, thereby closing switch 226 (block 308) for a time duration of TIME2 (e.g., 4ms) (block 310), which sets the voltage VPK on the line 218 equal to the voltage VPK_TRACK on the line 206 (block 316). When the switch 226 is closed, a next blanking time is started (block 312) and the timer 242 (e.g., a 12ms timer) is reset (block 314). Another pulse generator 258 (e.g., a falling edge monostable pulser triggered by the reset of the pulse generator 256) sets the signal RESET_TRACK on the line 214 to high, thereby closing the switch 214 (block

318) for a time duration of TIME1 (e.g., 4ms) (block 320), which resets the voltage VPK_TRACK on the line 206 to zero. After TIME1 elapses (block 320), the signal RESET_TRACK on the line 214 is reset, thereby opening the switch 214 (block 322). Opening the switch 214 completes the refresh sequence.

[0037] TIME1 is selected to be long enough and switch 214 has to be strong enough to allow VPK_TRACK on the line 206 to be discharged to a minimum value (e.g., 4ms). TIME2 is selected to be long enough and the output of switch 226 has to be strong enough to set the voltage VPK on the line 218 to the voltage VPK_TRACK on the line 206 (e.g., 4ms).

[0038] The duration of the blanking interval (e.g., 12ms) is selected to be long enough to prevent multiple resets, multiple settings, multiple updates, etc. of the peak detector circuits 202 and 204 during a half wave cycle to space apart instances of resets, settings, updates, etc.

[0039] In case a zero crossing is not detected, the timer 242 ensures at least one update of the peak detector circuits 202 and 204 occurs during each half wave cycle. When a zero crossing is detected, the timer 242 avoids triggering a second refresh sequence.

[0040] An example operation of the peak detector 200 will be described with reference to the example graph of FIG. 4. The illustrated example of FIG. 4 will be described with reference to five half wave cycles 402, 404, 406, 408 and 410 of the peak detector input voltage PDIN on the line 134. In the example half wave cycle 402, the voltage VPK_TRACK on the line 206 and the voltage VPK_OUT on the line 138 track the peak detector input voltage PDIN on the line 134. When the peak detector input voltage PDIN on the line 134 falls below the threshold LINE_RESET_THRESHOLD (see circle 412), the voltage VPK_TRACK on the line 206 is transferred to the voltage VPK_OUT on the line 138 during a first interval 414 of length TIME1 for use in the half wave cycle 404, and the voltage VPK_TRACK on the line 206 is reset to zero during a second interval 416 of length TIME2.

[0041] In the half wave cycle 406, the peak detector input voltage PDIN on the line 134 has a larger peak than the previous half wave cycles 402 and 404. Both the voltage VPK_TRACK on the line 206 and the voltage VPK_OUT on the line 138 instantaneously track the peak detector input voltage PDIN on the line 134, thus preventing any circuit damage to the power converter 100.

[0042] As shown in the half wave cycle 406, the voltage VPK_TRACK on the line 206 is held over for the half wave cycle 406 even though the peak detector input voltage PDIN on the line 134 is not as large in half wave cycle 406. This helps prevent any circuit damage to the power converter 100 in case the peak detector input voltage PDIN on the line 134 has any further positive transients.

[0043] The example peak detectors disclosed herein may be used in other applications where knowing or estimating the peak of a waveform according to teachings of this disclosure is beneficial. For example, detecting the envelope of AM modulated waveforms, inverter applications such as solar and wind power generation where line voltage or peak (RMS) monitoring is performed.

[0044] FIG. 5 illustrates an example AGC circuit 500 having an example peak detector 502, such as that disclosed in connection with FIGS. 2-4. The example peak detector 502 of FIG. 5 tracks peaks of a received signal on a line 504 and outputs the peaks as the example voltage VPK_OUT on the line 138 of FIG. 2. An example comparator 506 compares the voltage VPK_OUT on the line 138 with a target VPEAK_TARGET on a line 508. Outputs of the comparator 506 on a line 510 are used to control the gain of a receive amplifier 512.

[0045] FIG. 6 is a graph showing an example application of the automatic gain control circuit 500 of FIG. 5 to an RF signal. In the example of FIG. 6, a received RF signal 602 has a peak amplitude 604 that increased at a time 606. As described above, the peak detector 502 immediately tracks the increase in the peak amplitude 604 of the received signal 602. In response to the increase in the peak amplitude 604 of the received signal 602, the gain 608 of the receive amplifier 514 is lowered, thereby adjusting the gain controlled signal 610 to be generally even. In some examples, a zero-crossing is used rather than ten percent of peak for RF applications.

[0046] While an example peak detector topology including an operational amplifier 208, 220, a diode 210, 222, and a capacitor 212, 224 is shown in FIG. 2, other peak detector topologies may be used. FIG. 7 illustrates another example peak detector topology that may be used to implement the first peak detector circuit 202 and/or the second peak detector circuit 204. Additionally, and/or alternatively, the first peak detector circuit 202 and/or the second peak detector circuit 204 may implement different peak detector topologies.

[0047] The example peak detector topology of FIG. 7 varies a gate voltage of an open drain PMOS device 702 based on the output of an operational amplifier 704. When an input voltage 706 is greater than an output voltage 708, the operation amplifier 704 turns on the open drain PMOS device, thereby charging a capacitor 710. When the input voltage 706 is less than the output voltage 708, the operational amplifier 704 turns off the open drain PMOS device, thereby maintaining the output voltage 708 across the capacitor 710.

[0048] "Including" and "comprising" (and all forms and tenses thereof) are used herein to be open ended terms. Thus, whenever a claim employs any form of "include" or "comprise" (e.g., comprises, includes, comprising, including, having, etc.) as a preamble or within a

claim recitation of any kind, it is to be understood that additional elements, terms, etc. may be present without falling outside the scope of the corresponding claim or recitation. As used herein, when the phrase "at least" is used as the transition term in, for example, a preamble of a claim, it is open-ended in the same manner as the term "comprising" and “including” are open ended. The term “and/or” when used, for example, in a form such as A, B, and/or C refers to any combination or subset of A, B, C such as (1) A alone, (2) B alone, (3) C alone, (4) A with B, (5) A with C, (6) B with C, and (7) A with B and with C.

[0049] From the foregoing, it will be appreciated that example methods, apparatus and circuits have been disclosed that perform peak detection for power factor correction. The disclosed methods, apparatus and circuits improve the efficiency of power correction by eliminating analog-to-digital conversion, discrete comparators, complex switch network, complex switch control. Disclosed examples in stark contrast require only two half-wave peak-and-hold detectors and simple control logic.

[0050] Example peak detection methods, apparatus, systems and circuits are disclosed herein. Further examples and combinations thereof include at least the following.

[0051] Example 1 is a peak detector including a first peak-hold circuit having a first input terminal and a first output terminal, the first peak-hold circuit to determine a first peak of a rectified input voltage at the first input terminal during a first time interval, and to track a second peak of the rectified input voltage during a second time interval, the second time interval distinct from the first time interval, and a second peak-hold circuit having a second input terminal and a second output terminal, the second peak-hold circuit to determine, during the second time interval, a greater of the first peak and the second peak, the first output terminal coupled to the second input terminal to convey the first peak and the second peak to the second peak-hold circuit, the greater of the first peak and the second peak output at the second output terminal.

[0052] Example 2 is the peak detector of example 1, further including a control signal generator to, when the rectified input voltage satisfies a threshold, set an output of the second peak-hold circuit at the second output terminal to an output of the first peak-hold circuit at the first output terminal.

[0053] Example 3 is the peak detector of example 2, wherein the control signal generator is to reset the output of the first peak-hold circuit at the first output terminal.

[0054] Example 4 is the peak detector of example 2, wherein the control signal generator is to prevent multiple resets of the output of the first peak-hold circuit at the first output terminal during the second time interval, and prevent multiple settings of the output of the

first peak-hold circuit at the first output terminal to the output of the second peak-hold circuit at the second output terminal during the second time interval.

[0055] Example 5 is the peak detector of example 2, wherein the control signal generator is to ensure the output of the first peak-hold circuit at the first output terminal is reset during the second time interval, and ensure the output of the second peak-hold circuit at the second output terminal is set to the output of the first peak-hold circuit at the first output terminal during the second time interval.

[0056] Example 6 is the peak detector of example 1, wherein the first time interval is a half wave cycle of the rectified input voltage, and wherein the rectified input voltage is a rectified alternating current signal.

[0057] Example 7 is the peak detector of example 1, wherein the rectified input voltage is a rectified alternating current voltage, and further including an on_off controller coupled to the second output terminal, the on_off controller to charge and discharge a power factor correction circuit based on the greater of the first peak and the second peak.

[0058] Example 8 is the peak detector of example 1, wherein the rectified input voltage is a rectified radio frequency voltage, and further including an automatic gain control circuit having a gain based on the greater of the first peak and the second peak.

[0059] Example 9 is a method of controlling a power factor correction circuit, the method comprising tracking a first peak of a waveform during a first cycle portion of the waveform, tracking a second peak of the waveform during a second cycle portion of the waveform; and tracking a greater of the first peak and the second peak during the second cycle portion of the waveform, and selectively charging a power factor correction circuit based on the greater of the first peak and the second peak.

[0060] Example 10 is the method of controlling a power factor correction circuit of example 9, further including, when the waveform satisfies a threshold, setting a first output of a first peak-hold circuit tracking the greater of the first peak and the second peak to a second output of a second peak-hold circuit tracking the second peak.

[0061] Example 11 is the method of controlling a power factor correction circuit of example 10, further including resetting the second output of the second peak-hold circuit.

[0062] Example 12 is the method of controlling a power factor correction circuit of example 10, further including preventing multiple settings of the first output of the first peak-hold circuit to the second output of the second peak-hold circuit during the second cycle portion, and preventing multiple resets of the second output of the second peak-hold circuit during the second cycle portion.

[0063] Example 13 is the method of controlling a power factor correction circuit of example 10, further including ensuring the first output of the first peak-hold circuit is set to the second output of the second peak-hold circuit during the second cycle portion, and ensuring the second output of the second peak-hold circuit is reset during the second cycle portion.

[0064] Example 14 is the controlling a power factor correction circuit in the waveform of example 9, wherein the first cycle portion is a half wave cycle of an alternating current signal.

[0065] Example 15 is a peak detector including:

[0066] a first peak-hold circuit having a first input terminal and a second input terminal;

a second peak-hold circuit having a third input terminal coupled to the first input terminal, and a fourth output terminal, the second peak-hold circuit including:

a first operational amplifier having a fifth terminal, a sixth terminal and a seventh terminal, the fifth terminal coupled to the third input terminal;

a first diode having an eighth terminal and a ninth terminal, the eighth terminal coupled to the seventh terminal, and the ninth terminal coupled to the fourth output terminal;

a first switch having a tenth terminal, an eleventh terminal and a twelfth terminal, the tenth terminal coupled to the seventh terminal and the eighth terminal, the eleventh terminal coupled to the ninth terminal and the fourth output terminal, and the twelfth terminal coupled to a first reset signal; and

a first capacitor having a thirteenth terminal and a fourteenth terminal, the thirteenth terminal coupled to the fourth output terminal, the sixth terminal, the ninth terminal and the eleventh terminal, and the fourteenth terminal coupled to ground.

[0067] Example 16 is the peak detector of example 15, wherein the first peak-hold circuit includes:

a second operational amplifier having a sixteenth terminal, a seventeenth terminal and an eighteenth terminal, the sixteenth terminal coupled to the first input terminal;

a second diode having a nineteenth terminal and a twentieth terminal, the nineteenth terminal coupled to the eighteenth terminal, and the twentieth terminal coupled to the second output terminal;

a second capacitor having a twenty-first terminal and a twenty-second terminal, the twenty-first terminal coupled to the second output terminal, the seventeenth terminal and the twentieth terminal, and the twenty-second terminal coupled to ground; and

a second switch having a twenty-third terminal, an twenty-fourth terminal and a twenty-fifth terminal, the twenty-third terminal coupled to the second output terminal, the

twenty-first terminal and the twentieth terminal, the twenty-fourth terminal coupled to ground, and the twenty-fifth terminal coupled to a second reset signal.

[0068] Example 17 is the peak detector of example 16, further including a logic circuit including:

a first pulse generator having a first output coupled to the twelfth terminal to provide the first reset signal; and

a second pulse generator having a first input coupled to the first output, and a second output coupled to the twenty-fifth terminal to provide the second reset signal.

[0069] Example 18 is the peak detector of example 17, wherein the logic circuit further includes a blanking circuit having a third output coupled to the first input to space apart instances of the first reset signal and instances of the second reset signal.

[0070] Example 19 is the peak detector of claim 15, further including an on_off controller to charge and discharge a power factor correction circuit based on the greater of the first peak and the second peak.

[0071] Example 20 is the peak detector of claim 15, further including an automatic gain control circuit having a gain based on the greater of the first peak and the second peak.

[0072] Although certain example methods, apparatus and circuits have been disclosed herein, the scope of coverage of this patent is not limited thereto. On the contrary, this patent covers all methods, apparatus and circuits fairly falling within the scope of the claims of this patent.

CLAIMS

What is claimed is:

1. A peak detector, comprising:

a first peak-hold circuit having a first input terminal and a first output terminal, the first peak-hold circuit to determine a first peak of a rectified input voltage at the first input terminal during a first time interval, and to track a second peak of the rectified input voltage during a second time interval, the second time interval distinct from the first time interval; and

a second peak-hold circuit having a second input terminal and a second output terminal, the second peak-hold circuit to determine, during the second time interval, a greater of the first peak and the second peak, the first output terminal coupled to the second input terminal to convey the first peak and the second peak to the second peak-hold circuit, the greater of the first peak and the second peak output at the second output terminal.

2. The peak detector of claim 1, further including a control signal generator to, when the rectified input voltage satisfies a threshold, set an output of the second peak-hold circuit at the second output terminal to an output of the first peak-hold circuit at the first output terminal.

3. The peak detector of claim 2, wherein the control signal generator is to reset the output of the first peak-hold circuit at the first output terminal.

4. The peak detector of claim 2, wherein the control signal generator is to:

prevent multiple resets of the output of the first peak-hold circuit at the first output terminal during the second time interval; and

prevent multiple settings of the output of the first peak-hold circuit at the first output terminal to the output of the second peak-hold circuit at the second output terminal during the second time interval.

5. The peak detector of claim 2, wherein the control signal generator is to:

ensure the output of the first peak-hold circuit at the first output terminal is reset during the second time interval; and

ensure the output of the second peak-hold circuit at the second output terminal is set to the output of the first peak-hold circuit at the first output terminal during the second time interval.

6. The peak detector of claim 1, wherein the first time interval is a half wave cycle of the rectified input voltage, and wherein the rectified input voltage is a rectified alternating current signal.

7. The peak detector of claim 1, wherein the rectified input voltage is a rectified alternating current voltage, and further including an on_off controller coupled to the second output terminal, the on_off controller to charge and discharge a power factor correction circuit based on the greater of the first peak and the second peak.

8. The peak detector of claim 1, wherein the rectified input voltage is a rectified radio frequency voltage, and further including an automatic gain control circuit having a gain based on the greater of the first peak and the second peak.

9. A method of controlling a power factor correction circuit, the method comprising:

tracking a first peak of a waveform during a first cycle portion of the waveform;

tracking a second peak of the waveform during a second cycle portion of the waveform; and

tracking a greater of the first peak and the second peak during the second cycle portion of the waveform; and

selectively charging a power factor correction circuit based on the greater of the first peak and the second peak.

10. The method of controlling a power factor correction circuit of claim 9, further including, when the waveform satisfies a threshold, setting a first output of a first peak-hold circuit tracking the greater of the first peak and the second peak to a second output of a second peak-hold circuit tracking the second peak.

11. The method of controlling a power factor correction circuit of claim 10, further including resetting the second output of the second peak-hold circuit.

12. The method of controlling a power factor correction circuit of claim 10, further including:

preventing multiple settings of the first output of the first peak-hold circuit to the second output of the second peak-hold circuit during the second cycle portion; and

preventing multiple resets of the second output of the second peak-hold circuit during the second cycle portion.

13. The method of controlling a power factor correction circuit of claim 10, further including:

ensuring the first output of the first peak-hold circuit is set to the second output of the second peak-hold circuit during the second cycle portion; and

ensuring the second output of the second peak-hold circuit is reset during the second cycle portion.

14. The method of controlling a power factor correction circuit of claim 9, wherein the first cycle portion is a half wave cycle of an alternating current signal.

15. A peak detector, comprising:

a first peak-hold circuit having a first input terminal and a second input terminal;

a second peak-hold circuit having a third input terminal coupled to the first input terminal, and a fourth output terminal, the second peak-hold circuit including:

a first operational amplifier having a fifth terminal, a sixth terminal and a seventh terminal, the fifth terminal coupled to the third input terminal;

a first diode having an eighth terminal and a ninth terminal, the eighth terminal coupled to the seventh terminal, and the ninth terminal coupled to the fourth output terminal;

a first switch having a tenth terminal, an eleventh terminal and a twelfth terminal, the tenth terminal coupled to the seventh terminal and the eighth terminal, the eleventh terminal coupled to the ninth terminal and the fourth output terminal, and the twelfth terminal coupled to a first reset signal; and

a first capacitor having a thirteenth terminal and a fourteenth terminal, the thirteenth terminal coupled to the fourth output terminal, the sixth terminal, the ninth terminal and the eleventh terminal, and the fourteenth terminal coupled to ground.

16. The peak detector of claim 15, wherein the first peak-hold circuit includes:

a second operational amplifier having a sixteenth terminal, a seventeenth terminal and an eighteenth terminal, the sixteenth terminal coupled to the first input terminal;

a second diode having a nineteenth terminal and a twentieth terminal, the nineteenth terminal coupled to the eighteenth terminal, and the twentieth terminal coupled to the second output terminal;

a second capacitor having a twenty-first terminal and a twenty-second terminal, the twenty-first terminal coupled to the second output terminal, the seventeenth terminal and the twentieth terminal, and the twenty-second terminal coupled to ground; and

a second switch having a twenty-third terminal, an twenty-fourth terminal and a twenty-fifth terminal, the twenty-third terminal coupled to the second output terminal, the twenty-first terminal and the twentieth terminal, the twenty-fourth terminal coupled to ground, and the twenty-fifth terminal coupled to a second reset signal.

17. The peak detector of claim 16, further including a logic circuit including:

a first pulse generator having a first output coupled to the twelfth terminal to provide the first reset signal; and

a second pulse generator having a first input coupled to the first output, and a second output coupled to the twenty-fifth terminal to provide the second reset signal.

18. The peak detector of claim 17, wherein the logic circuit further includes a blanking circuit having a third output coupled to the first input to space apart instances of the first reset signal and instances of the second reset signal.

19. The peak detector of claim 15, further including an on_off controller to charge and discharge a power factor correction circuit based on the greater of the first peak and the second peak.

20. The peak detector of claim 15, further including an automatic gain control circuit having a gain based on the greater of the first peak and the second peak.

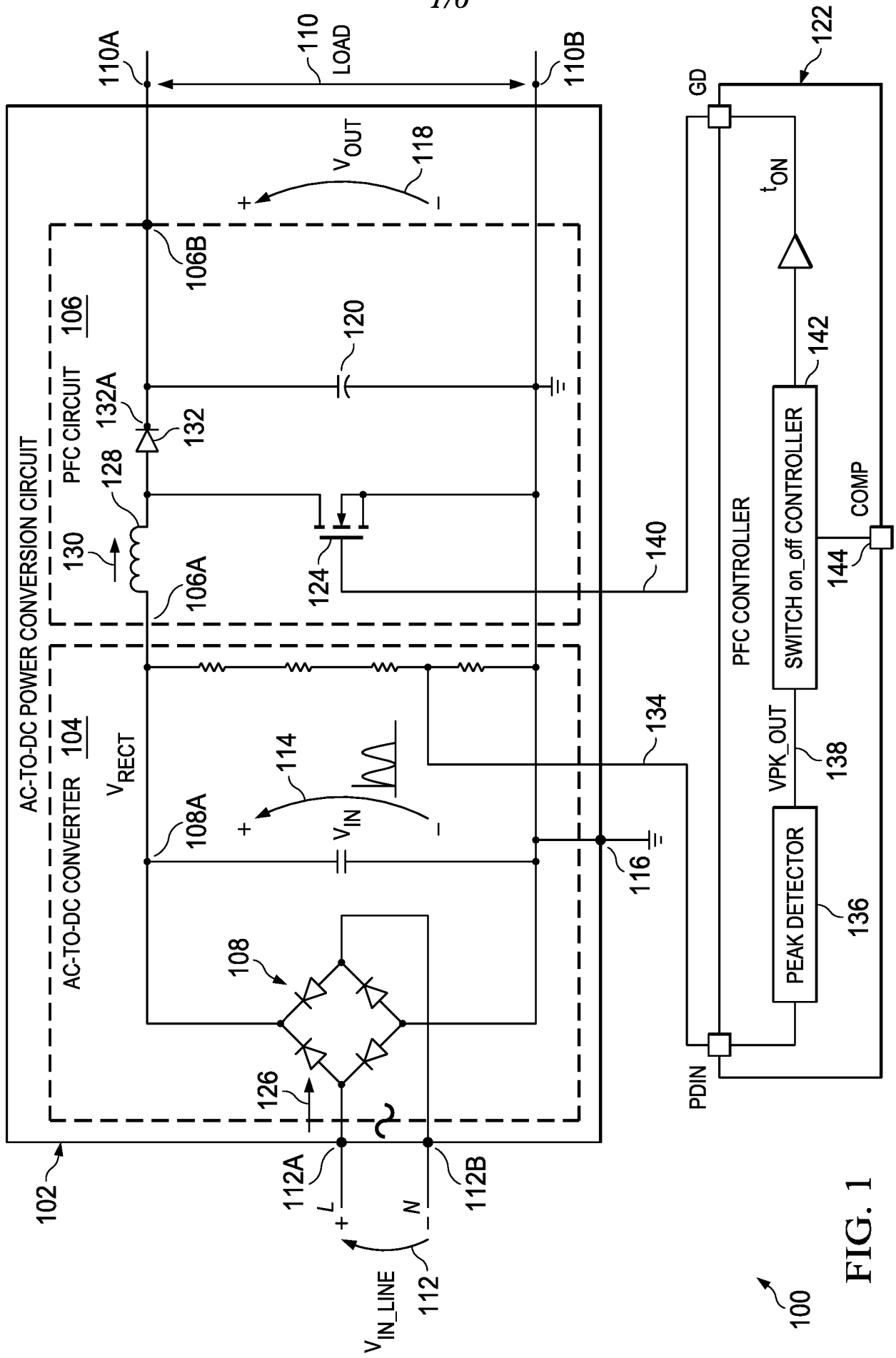
AC-TO-DC POWER CONVERSION CIRCUIT
AC-TO-DC CONVERTER 104
PFC CIRCUIT 106
LOAD
110A
110
110B
V_{OUT}
118
106B
120
132A
132
128
130
106A
124
140
V_{RECT}
114
V_{IN}
108A
134
116
108
126
102
112A
112B
L
N
112
V_{IN_LINE}
GD
122
t_{ON}
142
SWITCH on_off CONTROLLER
COMP
144
PFC CONTROLLER
VPK_OUT
138
PEAK DETECTOR
136
PDIN
100

FIG. 1

FIG. 2

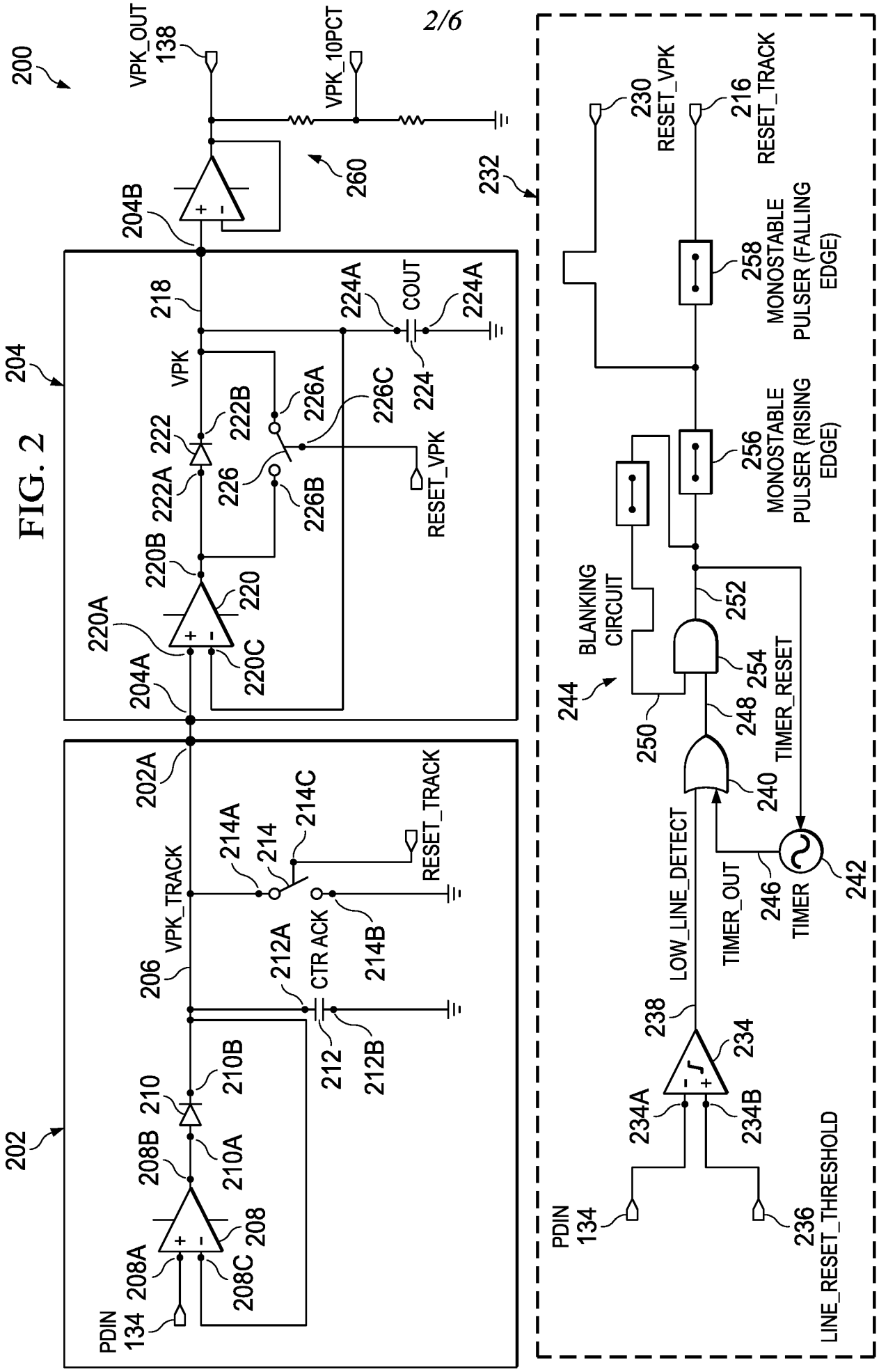
200
VPK_OUT
138
VPK_10PCT
260
232
204B
218
224A
COUT
224
224A
204
VPK
222
222B
226A
226C
222A
226
226B
RESET_VPK
220B
220
220A
220C
204A
202A
214A
214
214C
RESET_TRACK
206
VPK_TRACK
212A
CTR ACK
214B
212
212B
202
210
210B
208B
210A
208
208A
208C
PDIN
134
230
RESET_VPK
216
RESET_TRACK
258
MONOSTABLE
PULSER (FALLING
EDGE)
256
MONOSTABLE
PULSER (RISING
EDGE)
BLANKING
CIRCUIT
244
252
254
250
248
TIMER_RESET
240
LOW_LINE_DETECT
TIMER_OUT
246
TIMER
242
238
234
234A
234B
PDIN
134
236
LINE_RESET_THRESHOLD

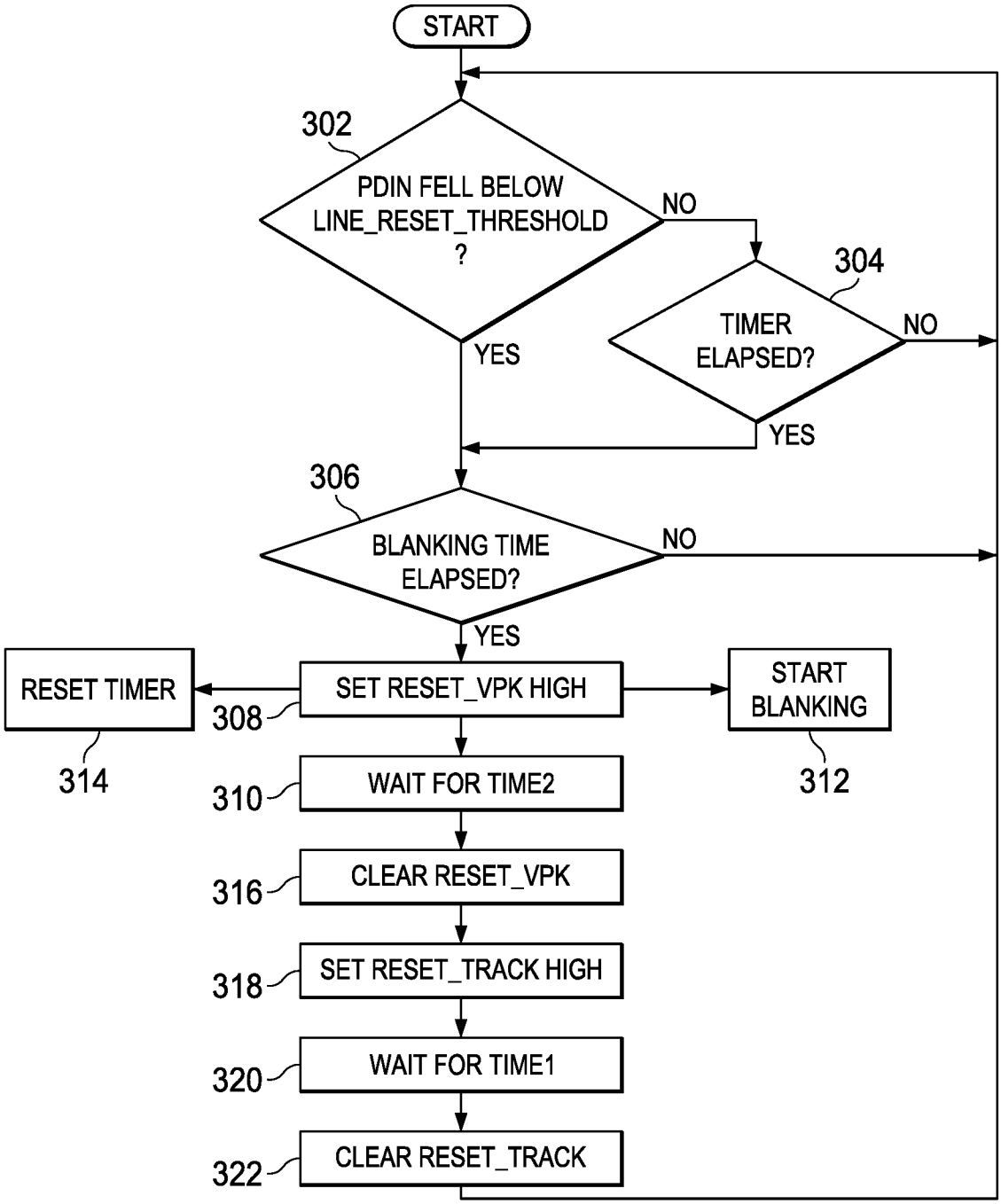
START
302
PDIN FELL BELOW LINE_RESET_THRESHOLD ?
NO
YES
304
TIMER ELAPSED?
NO
YES
306
BLANKING TIME ELAPSED?
NO
YES
RESET TIMER
314
SET RESET_VPK HIGH
308
START BLANKING
312
310
WAIT FOR TIME2
316
CLEAR RESET_VPK
318
SET RESET_TRACK HIGH
320
WAIT FOR TIME1
322
CLEAR RESET_TRACK

FIG. 3

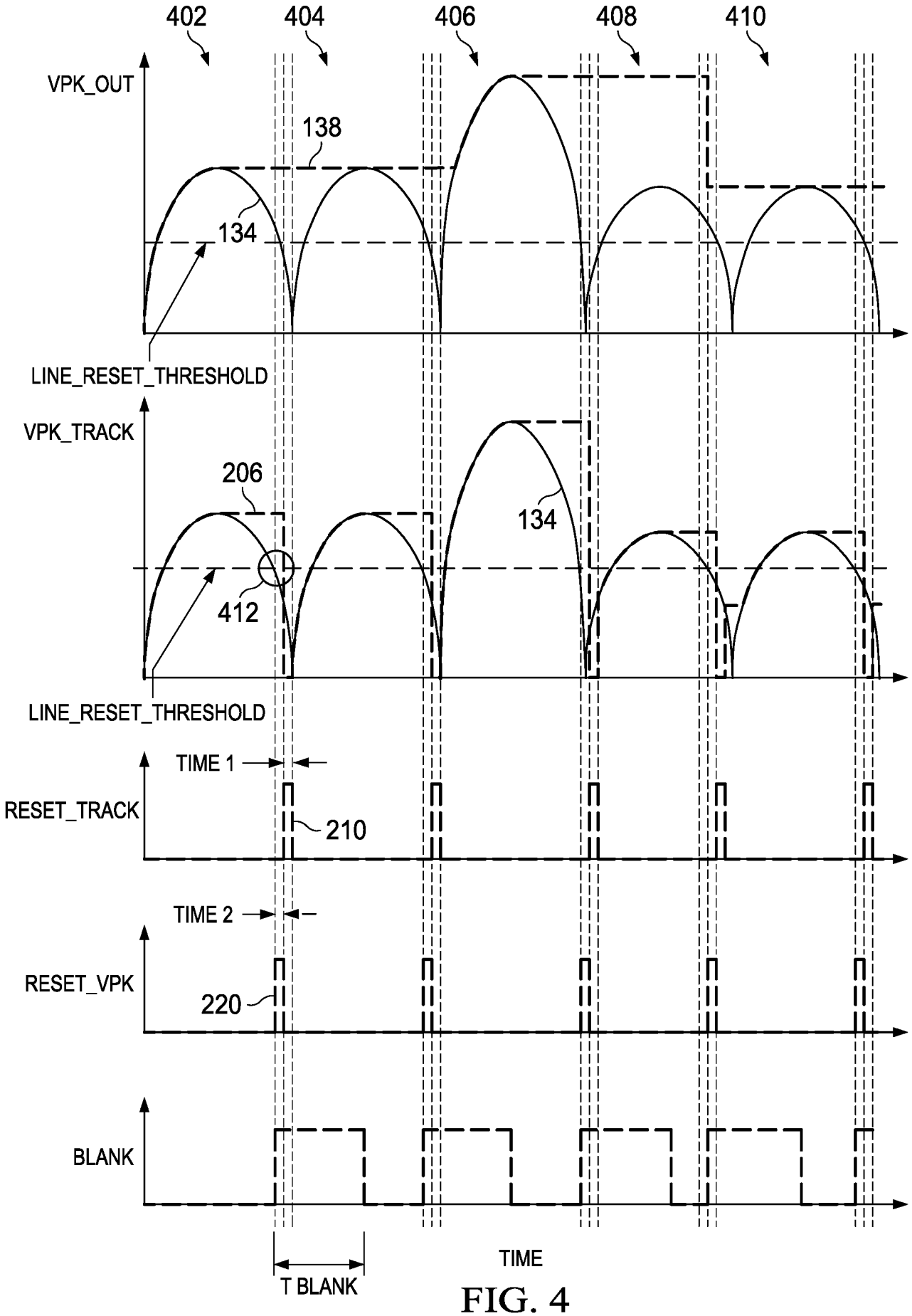
402
404
406
408
410
VPK_OUT
138
134
LINE_RESET_THRESHOLD
VPK_TRACK
206
134
412
LINE_RESET_THRESHOLD
TIME 1
RESET_TRACK
210
TIME 2
RESET_VPK
220
BLANK
T BLANK
TIME

FIG. 4

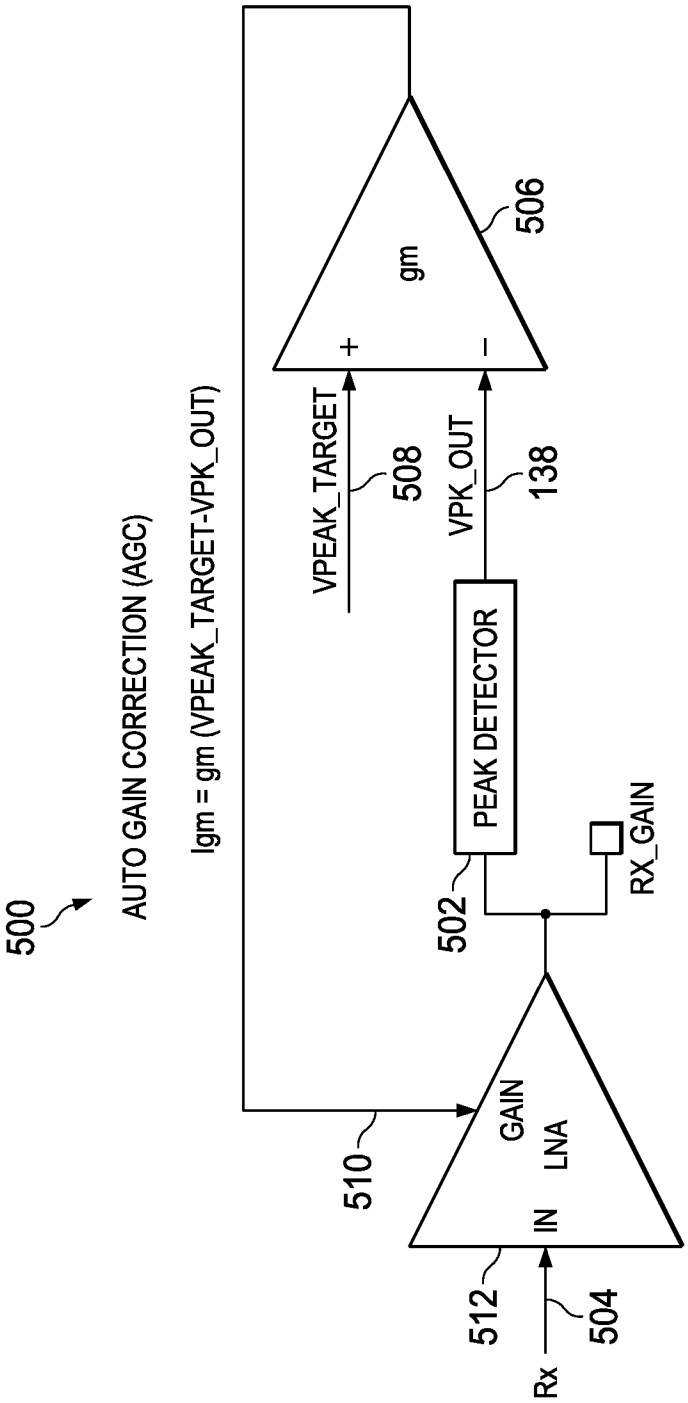
500
AUTO GAIN CORRECTION (AGC)
lgm = gm (VPEAK_TARGET-VPK_OUT)
gm
506
+
–
VPEAK_TARGET
508
VPK_OUT
138
PEAK DETECTOR
502
RX_GAIN
510
GAIN
LNA
IN
512
504
Rx

FIG. 5

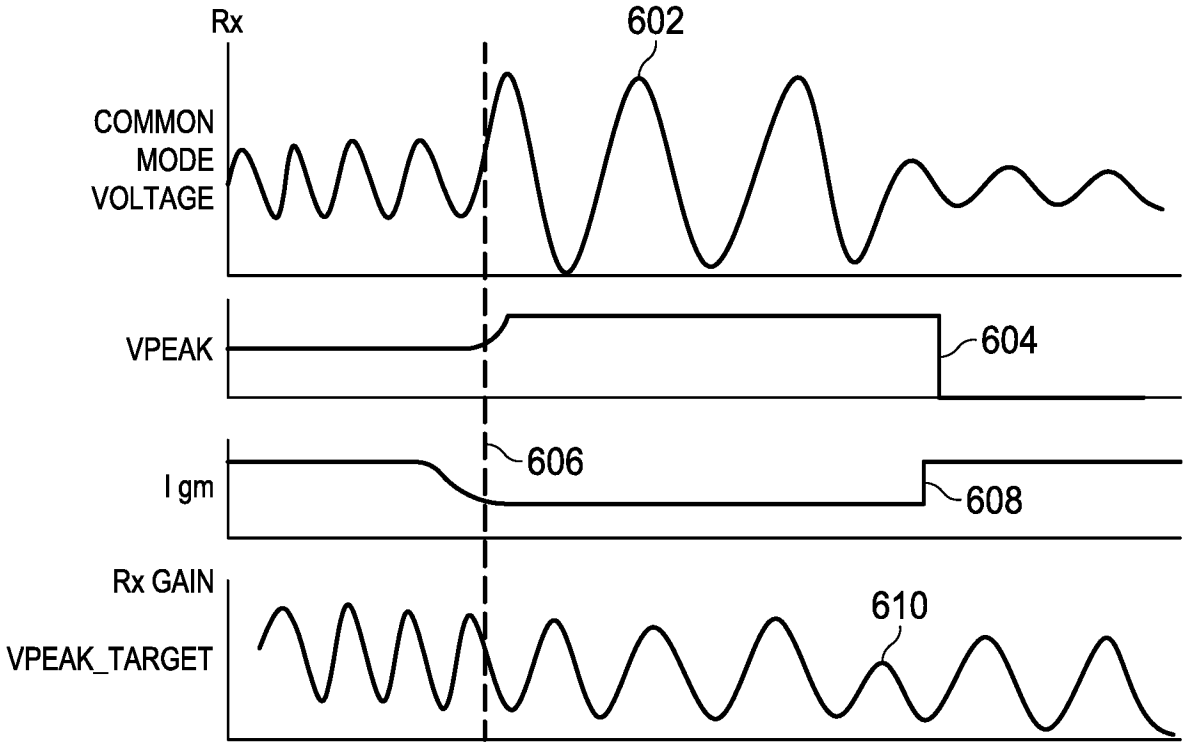
Rx
602
COMMON MODE VOLTAGE
VPEAK
604
606
I gm
608
Rx GAIN
610
VPEAK_TARGET

FIG. 6

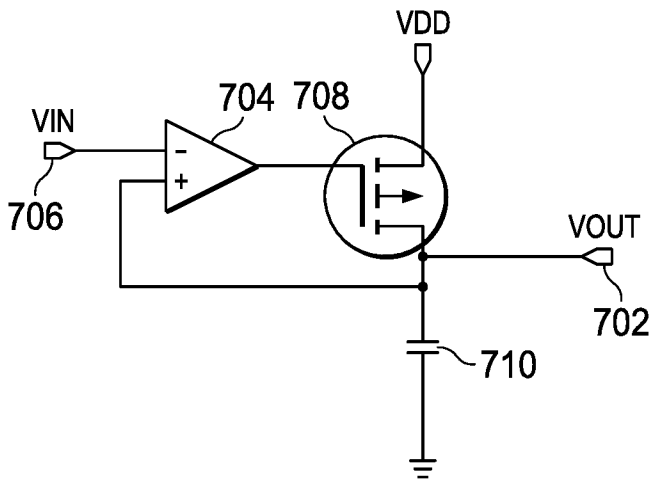
VDD
704
708
VIN
706
VOUT
702
710

FIG. 7

INTERNATIONAL SEARCH REPORT

International application No.

PCT/US 2019/038650

A. CLASSIFICATION OF SUBJECT MATTER

H02M 1/42 *(2007.01)*
G01R 19/04 *(2006.01)*

According to International Patent Classification (IPC) or to both national classification and IPC

B. FIELDS SEARCHED

Minimum documentation searched (classification system followed by classification symbols)

H02M 1/42, G01R 19/04, 19/30, G05F 1/70

Documentation searched other than minimum documentation to the extent that such documents are included in the fields searched

Electronic data base consulted during the international search (name of data base and, where practicable, search terms used)

PatSearch (RUPTO Internal), USPTO, PAJ, Espacenet, Information Retrieval System of FIPS

C. DOCUMENTS CONSIDERED TO BE RELEVANT

Category*	Citation of document, with indication, where appropriate, of the relevant passages	Relevant to claim No.
A	US 2014/0117947 A1 (RICHTEK TECHNOLOGY CORPORATION) 01.05.2014	1-20
A	RU 2186403 C2 (OOO KOMPANIYA "MIR") 27.07.2002	1-20
A	US 2016/0233759 A1 (POWER INTEGRATIONS, INC.) 11.08.2016	1-20
A	US 9660519 B2 (FUJI ELECTRIC CO., LTD.) 23.05.2017	1-20

☐ Further documents are listed in the continuation of Box C.

☐ See patent family annex.

* Special categories of cited documents:

"A" document defining the general state of the art which is not considered to be of particular relevance

"E" earlier document but published on or after the international filing date

"L" document which may throw doubts on priority claim(s) or which is cited to establish the publication date of another citation or other special reason (as specified)

"O" document referring to an oral disclosure, use, exhibition or other means

"P" document published prior to the international filing date but later than the priority date claimed

"T" later document published after the international filing date or priority date and not in conflict with the application but cited to understand the principle or theory underlying the invention

"X" document of particular relevance; the claimed invention cannot be considered novel or cannot be considered to involve an inventive step when the document is taken alone

"Y" document of particular relevance; the claimed invention cannot be considered to involve an inventive step when the document is combined with one or more other such documents, such combination being obvious to a person skilled in the art

"&" document member of the same patent family

Date of the actual completion of the international search	Date of mailing of the international search report
07 October 2019 (07.10.2019)	17 October 2019 (17.10.2019)

Name and mailing address of the ISA/RU:	Authorized officer
Federal Institute of Industrial Property, Berezhkovskaya nab., 30-1, Moscow, G-59, GSP-3, Russia, 125993 Facsimile No: (8-495) 531-63-18, (8-499) 243-33-37	I. Golovinova Telephone No. 8(495) 531-64-81