(12) INTERNATIONAL APPLICATION PUBLISHED UNDER THE PATENT COOPERATION TREATY (PCT)

(19) World Intellectual Property Organization
International Bureau

(43) International Publication Date
1 July 2010 (01.07.2010)

PCT

(10) International Publication Number
WO 2010/072259 A1

(51) International Patent Classification:
G01C 21/34 (2006.01) *G01C 21/32* (2006.01)

(21) International Application Number:
PCT/EP2008/068227

(22) International Filing Date:
23 December 2008 (23.12.2008)

(25) Filing Language: English

(26) Publication Language: English

(71) Applicant *(for all designated States except US)*: **TOMTOM INTERNATIONAL B.V.** [NL/NL]; Rembrandtplein 35, NL-1017 CT Amsterdam (NL).

(72) Inventor; and

(75) Inventor/Applicant *(for US only)*: **SHCHERBATYUK, Victor** [NL/BE]; Prof. Devochtstraat 23b3, B-2300 Turnhout (BE).

(81) Designated States *(unless otherwise indicated, for every kind of national protection available)*: AE, AG, AL, AM, AO, AT, AU, AZ, BA, BB, BG, BH, BR, BW, BY, BZ, CA, CH, CN, CO, CR, CU, CZ, DE, DK, DM, DO, DZ, EC, EE, EG, ES, FI, GB, GD, GE, GH, GM, GT, HN, HR, HU, ID, IL, IN, IS, JP, KE, KG, KM, KN, KP, KR, KZ, LA, LC, LK, LR, LS, LT, LU, LY, MA, MD, ME, MG, MK, MN, MW, MX, MY, MZ, NA, NG, NI, NO, NZ, OM, PG, PH, PL, PT, RO, RS, RU, SC, SD, SE, SG, SK, SL, SM, ST, SV, SY, TJ, TM, TN, TR, TT, TZ, UA, UG, US, UZ, VC, VN, ZA, ZM, ZW.

(84) Designated States *(unless otherwise indicated, for every kind of regional protection available)*: ARIPO (BW, GH, GM, KE, LS, MW, MZ, NA, SD, SL, SZ, TZ, UG, ZM, ZW), Eurasian (AM, AZ, BY, KG, KZ, MD, RU, TJ, TM), European (AT, BE, BG, CH, CY, CZ, DE, DK, EE, ES, FI, FR, GB, GR, HR, HU, IE, IS, IT, LT, LU, LV, MC, MT, NL, NO, PL, PT, RO, SE, SI, SK, TR), OAPI (BF, BJ, CF, CG, CI, CM, GA, GN, GQ, GW, ML, MR, NE, SN, TD, TG).

Declarations under Rule 4.17:

— *as to applicant's entitlement to apply for and be granted a patent (Rule 4.17(ii))*

[Continued on next page]

(54) Title: SYSTEMS AND METHODS FOR PROVIDING A GLOBAL RESPONSE TIME

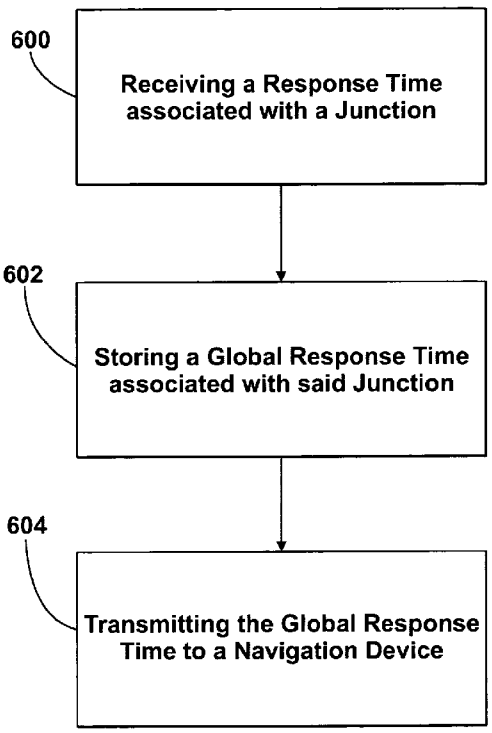

Fig. 6

(57) Abstract: Systems (302) and methods for providing a global response time are disclosed. A system (302) includes a processor (304) to couple to a communications channel (318) to receive at least one response time associated with a junction and to provide a global response associated with said junction to at least one navigation device and a memory (306, 312) operably coupled to the processor to store the global response time, the global response time being a function of the at least one response time. A method includes receiving at least one response time associated with a junction, storing a global response time associated with said junction in memory (306, 312), the global response time being a function of the at least one response time, and providing the global response time to at least one navigation device (200).

WO 2010/072259 A1

Published:

— *with international search report (Art. 21(3))*

SYSTEMS AND METHODS FOR PROVIDING A GLOBAL RESPONSE TIME

Field

This invention generally relates to systems and methods for providing a global response time.

Background

Navigation devices were traditionally utilized mainly in the areas of vehicle use, such as on cars, motorcycles, trucks, boats, etc. Alternatively, if such navigation devices were portable, they were further transferable between vehicles and/or useable outside the vehicle, for foot travel for example.

These navigation devices are typically tailored to produce a route of travel based upon an initial position and a selected/input travel destination. As a user of such a navigation device proceeds along the route of travel, the navigation device generally provide directions, and map information is displayed along the route of travel to a user of the navigation device. If the user should deviate from the route of travel, the navigation device identifies the deviation and then calculates a new route of travel to the travel destination. The new route of travel, similar to the original route of travel, is calculated from the position of the navigation device and the selected/input travel destination.

Summary

According to one aspect of the present application, a system for providing global response time to a navigation device is disclosed. The system includes a processor to couple to a communications channel to receive at least one response time associated with a junction and to provide a global response associated with said junction to at least one navigation device and a memory operably coupled to the processor to store the global response time, the global response time being a function of the at least one response time.

According to another aspect of the present application, a method of operating a system connectable to a navigation device is disclosed. The method includes receiving at least one response time associated with a junction, storing a global response time associated with said junction in memory, the global response time being a function of the at least one response time, and providing the global response time to at least one navigation device.

According to yet another aspect of the present application, computer software includes one or more software modules operable, when executed in an execution environment, to cause

a processor to receive at least one response time associated with a junction, store a global response time associated with said junction in memory, the global response time being a function of the at least one response time, and provide the global response time to at least one navigation device.

Advantages of these aspects are set out hereafter, and further details and features of each of these aspects are defined in the accompanying dependent claims and elsewhere in the following detailed description of various example embodiments.

Brief Description of the Drawings

The drawings described herein are for illustrative purposes only of selected embodiments and not all possible implementations, and are not intended to limit the scope of the present disclosure.

Fig. 1 is a schematic illustration of a Global Positioning System (GPS);

Fig. 2 is a schematic illustration of electronic components arranged to provide a navigation device;

Fig. 3 is a schematic illustration of the manner in which a navigation device may receive information over a wireless communications channel;

Figs. 4A and 4B are illustrative perspective views of a navigation device;

Fig. 5 is a flow diagram of a method of operating a navigation device to calculate an alternate route according to one embodiment of the present application; and

Fig. 6 is a flow diagram of a method of operating a system connectable to a navigation device according to one embodiment of the present application.

Corresponding reference numerals indicate corresponding parts throughout the several views of the drawings.

Detailed Description

Example embodiments of the present invention will now be described with particular reference to a portable navigation device (PND). It should be remembered, however, that the teachings of the present invention are not limited to PNDs but are instead universally applicable to any type of processing device that may be configured to execute navigation software so as to provide route planning and navigation functionality. It follows therefore that in the context of the present application, a navigation device is intended to include (without limitation) any type of route planning and navigation device, irrespective of whether that device is embodied as a PND, a navigation device built into a vehicle, or indeed a computing resource (such as a desktop or portable personal computer (PC), mobile telephone or portable digital assistant (PDA)) executing route planning and navigation software.

It will also be apparent from the following that the teachings of the present invention even have utility in circumstances where a user is not seeking instructions on how to navigate from one point to another, but merely wishes to be provided with a view of a given location. In such circumstances the "destination" location selected by the user need not have a corresponding start location from which the user wishes to start navigating, and as a consequence references herein to the "destination" location or indeed to a "destination" view should not be interpreted to mean that the generation of a route is essential, that travelling to the "destination" must occur, or indeed that the presence of a destination requires the designation of a corresponding start location.

With the above provisos in mind, Fig. 1 illustrates an example view of Global Positioning System (GPS), usable by navigation devices. Such systems are known and are used for a variety of purposes. In general, GPS is a satellite-radio based navigation system capable of determining continuous position, velocity, time, and in some instances direction information for an unlimited number of users. Formerly known as NAVSTAR, the GPS incorporates a plurality of satellites which orbit the earth in extremely precise orbits. Based on these precise orbits, GPS satellites can relay their location to any number of receiving units.

The GPS system is implemented when a device, specially equipped to receive GPS data, begins scanning radio frequencies for GPS satellite signals. Upon receiving a radio signal from a GPS satellite, the device determines the precise location of that satellite via one of a plurality of different conventional methods. The device will continue scanning, in most instances, for signals until it has acquired at least three different satellite signals (noting that position is not normally, but can be determined, with only two signals using other triangulation

techniques). Implementing geometric triangulation, the receiver utilizes the three known positions to determine its own two-dimensional position relative to the satellites. This can be done in a known manner. Additionally, acquiring a fourth satellite signal will allow the receiving device to calculate its three dimensional position by the same geometrical calculation in a known manner. The position and velocity data can be updated in real time on a continuous basis by an unlimited number of users.

As shown in Figure 1, the GPS system is denoted generally by reference numeral 100. A plurality of satellites 120 are in orbit about the earth 124. The orbit of each satellite 120 is not necessarily synchronous with the orbits of other satellites 120 and, in fact, is likely asynchronous. A GPS receiver 140 is shown receiving spread spectrum GPS satellite signals 160 from the various satellites 120.

The spread spectrum signals 160, continuously transmitted from each satellite 120, utilize a highly accurate frequency standard accomplished with an extremely accurate atomic clock. Each satellite 120, as part of its data signal transmission 160, transmits a data stream indicative of that particular satellite 120. It is appreciated by those skilled in the relevant art that the GPS receiver device 140 generally acquires spread spectrum GPS satellite signals 160 from at least three satellites 120 for the GPS receiver device 140 to calculate its two-dimensional position by triangulation. Acquisition of an additional signal, resulting in signals 160 from a total of four satellites 120, permits the GPS receiver device 140 to calculate its three-dimensional position in a known manner.

Figure 2 is an illustrative representation of electronic components of a navigation device 200 according to an example embodiment of the present invention, in block component format. It should be noted that the block diagram of the navigation device 200 is not inclusive of all components of the navigation device, but is only representative of many example components.

The navigation device 200 is located within a housing (not shown). The housing includes a processor 210 connected to an input device 220 and a display screen 240. The input device 220 can include a keyboard device, voice input device, touch panel and/or any other known input device utilized to input information; and the display screen 240 can include any type of display screen such as an LCD display, for example. In an example arrangement the input device 220 and display screen 240 are integrated into an integrated input and display device, including a touchpad or touch screen input so that a user need only touch a portion of the display screen 240 to select one of a plurality of display choices or to activate one of a plurality of virtual buttons.

The navigation device may include an output device 260, for example an audible output device (*e.g.*, a loudspeaker, etc.). As output device 260 can produce audible information for a user of the navigation device 200, it is should equally be understood that input device 240 can include a microphone and software for receiving input voice commands as well.

In the navigation device 200, processor 210 is operatively connected to and set to receive input information from input device 220 via a connection 225, and operatively connected to at least one of display screen 240 and output device 260, via output connections 245, to output information thereto. Further, the processor 210 is operably coupled to a memory resource 230 via connection 235 and is further adapted to receive/send information from/to input/output (I/O) ports 270 via connection 275, wherein the I/O port 270 is connectible to an I/O device 280 external to the navigation device 200. The memory resource 230 comprises, for example, a volatile memory, such as a Random Access Memory (RAM) and a non-volatile memory, for example a digital memory, such as a flash memory. The external I/O device 280 may include, but is not limited to an external listening device such as an earpiece for example. The connection to I/O device 280 can further be a wired or wireless connection to any other external device such as a car stereo unit for hands-free operation and/or for voice activated operation for example, for connection to an ear piece or head phones, and/or for connection to a mobile phone for example, wherein the mobile phone connection may be used to establish a data connection between the navigation device 200 and the internet or any other network for example, and/or to establish a connection to a server via the internet or some other network for example.

Fig. 2 further illustrates an operative connection between the processor 210 and an antenna/receiver 250 via connection 255, wherein the antenna/receiver 250 can be a GPS antenna/receiver for example. It will be understood that the antenna and receiver designated by reference numeral 250 are combined schematically for illustration, but that the antenna and receiver may be separately located components, and that the antenna may be a GPS patch antenna or helical antenna for example.

Further, it will be understood by one of ordinary skill in the art that the electronic components shown in Fig. 2 are powered by power sources (not shown) in a conventional manner. As will be understood by one of ordinary skill in the art, different configurations of the components shown in Fig. 2 are considered to be within the scope of the present application. For example, the components shown in Fig. 2 may be in communication with one another via wired and/or wireless connections and the like. Thus, the scope of the navigation device 200 of

the present application includes a portable or handheld navigation device 200.

In addition, the portable or handheld navigation device 200 of Fig. 2 can be connected or "docked" in a known manner to a vehicle such as a bicycle, a motorbike, a car or a boat for example. Such a navigation device 200 is then removable from the docked location for portable or handheld navigation use.

Referring now to Fig. 3, the navigation device 200 may establish a "mobile" or telecommunications network connection with a server 302 via a mobile device (not shown) (such as a mobile phone, PDA, and/or any device with mobile phone technology) establishing a digital connection (such as a digital connection via known Bluetooth technology for example). Thereafter, through its network service provider, the mobile device can establish a network connection (through the internet for example) with a server 302. As such, a "mobile" network connection is established between the navigation device 200 (which can be, and often times is mobile as it travels alone and/or in a vehicle) and the server 302 to provide a "real-time" or at least very "up to date" gateway for information.

The establishing of the network connection between the mobile device (via a service provider) and another device such as the server 302, using an internet (such as the World Wide Web) for example, can be done in a known manner. This can include use of TCP/IP layered protocol for example. The mobile device can utilize any number of communication standards such as CDMA, GSM, WAN, etc.

As such, an internet connection may be utilized which is achieved via data connection, via a mobile phone or mobile phone technology within the navigation device 200 for example. For this connection, an internet connection between the server 302 and the navigation device 200 is established. This can be done, for example, through a mobile phone or other mobile device and a GPRS (General Packet Radio Service)-connection (GPRS connection is a high-speed data connection for mobile devices provided by telecom operators; GPRS is a method to connect to the internet).

The navigation device 200 can further complete a data connection with the mobile device, and eventually with the internet and server 302, via existing Bluetooth technology for example, in a known manner, wherein the data protocol can utilize any number of standards, such as the GSRM, the Data Protocol Standard for the GSM standard, for example.

The navigation device 200 may include its own mobile phone technology within the navigation device 200 itself (including an antenna for example, or optionally using the internal antenna of the navigation device 200). The mobile phone technology within the navigation

device 200 can include internal components as specified above, and/or can include an insertable card (e.g. Subscriber Identity Module or SIM card), complete with necessary mobile phone technology and/or an antenna for example. As such, mobile phone technology within the navigation device 200 can similarly establish a network connection between the navigation device 200 and the server 302, via the internet for example, in a manner similar to that of any mobile device.

For GRPS phone settings, a Bluetooth enabled navigation device may be used to correctly work with the ever changing spectrum of mobile phone models, manufacturers, etc., model/manufacturer specific settings may be stored on the navigation device 200 for example. The data stored for this information can be updated.

In Fig. 3 the navigation device 200 is depicted as being in communication with the server 302 via a generic communications channel 318 that can be implemented by any of a number of different arrangements. The server 302 and a navigation device 200 can communicate when a connection via communications channel 318 is established between the server 302 and the navigation device 200 (noting that such a connection can be a data connection via mobile device, a direct connection via personal computer via the internet, etc.).

The server 302 includes, in addition to other components which may not be illustrated, a processor 304 operatively connected to a memory 306 and further operatively connected, via a wired or wireless connection 314, to a mass data storage device 312. The processor 304 is further operatively connected to transmitter 308 and receiver 310, to transmit and send information to and from navigation device 200 via communications channel 318. The signals sent and received may include data, communication, and/or other propagated signals. The transmitter 308 and receiver 310 may be selected or designed according to the communications requirement and communication technology used in the communication design for the navigation system 200. Further, it should be noted that the functions of transmitter 308 and receiver 310 may be combined into a signal transceiver.

Server 302 is further connected to (or includes) a mass storage device 312, noting that the mass storage device 312 may be coupled to the server 302 via communication link 314. The mass storage device 312 contains a store of navigation data and map information, and can again be a separate device from the server 302 or can be incorporated into the server 302.

The navigation device 200 is adapted to communicate with the server 302 through communications channel 318, and includes processor, memory, etc. as previously described with regard to Fig. 2, as well as transmitter 320 and receiver 322 to send and receive signals

and/or data through the communications channel 318, noting that these devices can further be used to communicate with devices other than server 302. Further, the transmitter 320 and receiver 322 are selected or designed according to communication requirements and communication technology used in the communication design for the navigation device 200 and the functions of the transmitter 320 and receiver 322 may be combined into a single transceiver.

Software stored in server memory 306 provides instructions for the processor 304 and allows the server 302 to provide services to the navigation device 200. One service provided by the server 302 involves processing requests from the navigation device 200 and transmitting navigation data from the mass data storage 312 to the navigation device 200. Another service provided by the server 302 includes processing the navigation data using various algorithms for a desired application and sending the results of these calculations to the navigation device 200.

The communication channel 318 generically represents the propagating medium or path that connects the navigation device 200 and the server 302. Both the server 302 and navigation device 200 include a transmitter for transmitting data through the communication channel and a receiver for receiving data that has been transmitted through the communication channel.

The communication channel 318 is not limited to a particular communication technology. Additionally, the communication channel 318 is not limited to a single communication technology; that is, the channel 318 may include several communication links that use a variety of technology. For example, the communication channel 318 can be adapted to provide a path for electrical, optical, and/or electromagnetic communications, etc. As such, the communication channel 318 includes, but is not limited to, one or a combination of the following: electric circuits, electrical conductors such as wires and coaxial cables, fiber optic cables, converters, radio-frequency (RF) waves, the atmosphere, empty space, etc. Furthermore, the communication channel 318 can include intermediate devices such as routers, repeaters, buffers, transmitters, and receivers, for example.

In one illustrative arrangement, the communication channel 318 includes telephone and computer networks. Furthermore, the communication channel 318 may be capable of accommodating wireless communication such as radio frequency, microwave frequency, infrared communication, etc. Additionally, the communication channel 318 can accommodate satellite communication.

The communication signals transmitted through the communication channel 318 include, but are not limited to, signals as may be required or desired for given communication technology. For example, the signals may be adapted to be used in cellular communication

technology such as Time Division Multiple Access (TDMA), Frequency Division Multiple Access (FDMA), Code Division Multiple Access (CDMA), Global System for Mobile Communications (GSM), etc. Both digital and analogue signals can be transmitted through the communication channel 318. These signals may be modulated, encrypted and/or compressed signals as may be desirable for the communication technology.

The server 302 includes a remote server accessible by the navigation device 200 via a wireless channel. The server 302 may include a network server located on a local area network (LAN), wide area network (WAN), virtual private network (VPN), etc.

The server 302 may include a personal computer such as a desktop or laptop computer, and the communication channel 318 may be a cable connected between the personal computer and the navigation device 200. Alternatively, a personal computer may be connected between the navigation device 200 and the server 302 to establish an internet connection between the server 302 and the navigation device 200. Alternatively, a mobile telephone or other handheld device may establish a wireless connection to the internet, for connecting the navigation device 200 to the server 302 via the internet.

The navigation device 200 may be provided with information from the server 302 via information downloads which may be periodically updated automatically or upon a user connecting navigation device 200 to the server 302 and/or may be more dynamic upon a more constant or frequent connection being made between the server 302 and navigation device 200 via a wireless mobile connection device and TCP/IP connection for example. For many dynamic calculations, the processor 304 in the server 302 may be used to handle the bulk of the processing needs, however, processor 210 of navigation device 200 can also handle much processing and calculation, oftentimes independent of a connection to a server 302.

As indicated above in Fig. 2, a navigation device 200 includes a processor 210, an input device 220, and a display screen 240. The input device 220 and display screen 240 may be integrated into an integrated input and display device to enable both input of information (via direct input, menu selection, etc.) and display of information through a touch panel screen, for example. Such a screen may be a touch input LCD screen, for example, as is well known to those of ordinary skill in the art. Further, the navigation device 200 can also include any additional input device 220 and/or any additional output device 260, such as audio input/output devices for example.

Figs 4A and 4B are perspective views of a navigation device 200. As shown in Fig. 4A, the navigation device 200 may be a unit that includes an integrated input and display device 290

(a touch panel screen for example) and the other components of Fig. 2 (including but not limited to internal GPS receiver 250, microprocessor 210, a power supply, memory systems 230, etc.).

The navigation device 200 may sit on an arm 292, which itself may be secured to a vehicle dashboard/window/etc. using a suction cup 294. This arm 292 is one example of a docking station to which the navigation device 200 can be docked.

As shown in Fig. 4B, the navigation device 200 can be docked or otherwise connected to an arm 292 of the docking station by snap connecting the navigation device 292 to the arm 292 for example. The navigation device 200 may then be rotated on the arm 292, as shown by the arrow of Fig. 4B. To release the connection between the navigation device 200 and the docking station, a button on the navigation device 200 may be pressed, for example. Other equally suitable arrangements for coupling and decoupling the navigation device to a docking station are well known to persons of ordinary skill in the art.

According to at least one embodiment of the present application, a navigation device 200 includes a processor 210 to calculate a planned route between a current location of the navigation device and a desired destination. The processor 210 is configured to calculate an alternate route to the desired destination based on a response time, when the navigation device 200 diverges from the planned route at a junction, such that an estimated travel time to an initial deviation included in the alternate route is at least equal to the response time. The navigation device 200 includes a receiver 250 operably coupled to the processor 210 and to receive at least one spread spectrum signal such that the processor 210 in conjunction with the receiver 250 operates to determine the current location of the navigation device 200 and to monitor travel along the planned route, and a display device 240 operably coupled to the processor 210 to display the alternate route.

According to at least one embodiment of the present application, a method of operating a navigation device 200 for calculating an alternate route is disclosed. The method includes monitoring travel of a navigation device 200 along a planned route to a desired destination, calculating an alternate route to the desired destination based on a response time, when the navigation device 200 diverges from the planned route at a junction, such that an estimated travel time to an initial deviation included in the alternate route is at least equal to the response time, and displaying the alternate route via a display device 240.

According to at least one embodiment of the present application, a computer software comprising one or more software modules operable, when executed in an execution environment, to cause a processor 210 to calculate an alternate route to a desired destination

based on a response time, when a navigation device 200 diverges from a planned route at a junction, such that an estimated travel time to an initial deviation included in the alternate route is at least equal to the response time and store the alternate route in memory 230 included with the navigation device.

Referring again to Fig. 2, a navigation device 200 includes a processor 210 and a receiver 250 operably coupled to the processor 210 and to receive at least one spread spectrum signal. The processor 210 in conjunction with the receiver 250 operates to determine a current location of the navigation device 200.

Based on the current location, the navigation device 200 may calculate a planned route between the current location and a desired destination received from a user. The desired destination may be received from the user via an input device 220, *e.g.*, a keypad, button, touch screen, etc. The desired destination may be one or multiple of a point of interest, a favorite place, a recent destination, a previous destination, a pre-programmed destination, and/or a specific address entered by the user, etc. The navigation device 200 displays the planned route to the user via a display device 240 included in the navigation device 200. The user may be directed along the planned route by the display device 240 and/or audible instruction from an output device 260, e.g., a loudspeaker, etc., included in the navigation device 200. Other output devices may be included in other embodiments to assist the user in travelling along the planned route. In various embodiments, a processor may display the planned route along with map information, such that a user may visually understand the planned route as compared to the buildings and/or terrain visible to the user.

In at least one embodiment, the processor 210 may, in conjunction with the receiver 250, monitor travel along the planned route. If the navigation device 200 diverge from the planned route, the processor 210 is configured to calculate an alternate route. Specifically, when travelling along a planned route, a navigation device 200 may diverge from the planned route at a junction, *e.g.*, make a turn not included in the planned route, fail to make a turn included in the planned route, etc. When the navigation device 200 travels through said junction, various alternate routes may exist for travelling between a current location of the navigation device 200 and the desired destination. The processor 210, however, is configured to calculate an alternate route based on a response time such that an estimated travel time to an initial deviation included in the alternate route is at least equal to the response time. The initial deviation may include an initial turn, exit, and/or offset from a current route of travel of the navigation device 200.

As indicated above, calculation of the alternate route may be based on the response time as compared to the estimated travel time to allow a user sufficient time to travel along the alternate route at the initial deviation. An estimated travel time may be calculated as a distance (D) to an initial deviation divided by a speed (S) of a navigation device 200. Accordingly, an alternate route may include the initial deviation for which:

$$D / S \geq \text{Response Time}$$

In one example implementation, when a user diverges from a planned route at a junction, a next junction may be one hundred (100) km (kilometer) from said junction. If the navigation device 200 is travelling one hundred (100) km/hr (kilometer per hour) when the navigation device 200 diverges from the planned route, the estimated travel time to the next junction is about 3.6 seconds (D / S = (0.1 km / 100 km/hr) * (360 seconds / 1 minute) = 3.6 seconds). For an alternate route including a turn at the next junction, *i.e.*, an initial deviation from a current route of travel, the processor 210 must calculate an alternate route from the next junction to the desired destination and display the alternate route to the user, with sufficient time for the user to react to the new alternate route. In this particular example implementation, the response time may be a fixed response time of twenty (20) seconds. Accordingly, based on a response time of 20 seconds, because the estimated travel time to the next junction is 3.6 seconds (less than 20 seconds), the processor 210 disqualifies the next junction as the initial deviation to be included in the alternate route to the desired destination. In calculating the alternate route, the processor 210 may disqualify one or more subsequent junctions, until an estimated travel time associated with the junction (the initial deviation) is at least equal to the fixed response time of 20 seconds. The processor 210, then, calculates the alternate route to the desired destination and displays the alternate route to the user via a display device 240 included in the navigation device 200. It should be appreciated that in at least some other embodiments, an estimated travel time may be required to be greater than a response time, *i.e.*, D / S > Response Time.

While 20 seconds is the response time in the above example implementation, it should be appreciated that a different response time may be used in other embodiments. In one example embodiment, a response time may be fixed between about 5 seconds and about 200 seconds. In another example embodiment, a response time may be fixed between about 15 seconds and about 60 seconds. Further, in other example embodiments, a response time being any discrete time within the above listed ranges may be employed. It should also be appreciated that other suitable response times may be employed in still other embodiments. In

one example, a response time may be stored in a 32-bit memory location, such that a response time may be set to any of the 2^{32} (*i.e.*, 4,294,967,296) possible discrete number capable of being stored in the memory location. It should be appreciated that a smaller or larger memory location may be employed in other embodiment of the present application. A response time may be selected based on one or more of a speed of the navigation device 200, a time period required by a processor to calculate an alternate route, a characteristic of at least one of a junction, a road, and an initial deviation, etc. In one example implementation, a characteristic may include the number of lanes included in a road. For example, a larger response time may be provided for a four-lane road, as compared to a two-lane road, to ensure a navigation device 200 travelling in a lane opposite an initial deviation has sufficient time to changes lanes before travelling along an alternate route at the initial deviation. In another example implementation, a navigation device 200 may include a response time for several speed ranges of the navigation device 200, such as 20 seconds for 0-50 km/hr, 30 seconds for 50-70 km/hr, etc. It should be appreciated that different speed ranges and/or response times may be employed in other example implementations and/or embodiments of the present application. It should further be appreciated that even though a navigation device 200 may employ multiple fixed response times, various response times associated with different junctions may be different from one another.

In at least one embodiment of the present application, when a navigation device 200 diverges from a planned route at a junction, the response time may include a global response time associated with said junction. The global response time may be received through an input device, *e.g.*, 220, 270, 322, etc., included in the navigation device 200 via a communication channel 318 from a system 302, described herein below. The global response time may be stored in memory 230 in the navigation device 200. When a global response time associated with said junction is unavailable from the system 302, the processor 210 may be configured to set the response time to a default response time. The default response time may be zero seconds, 10 seconds, 20 seconds, 40 seconds, or other suitable response times, etc.

Regardless of the response time employed by the navigation device 200, the processor 210 is configured to calculate an alternate route based on the response time. When calculated, the alternate route is displayed to the user via the display device 240. In at least some embodiments, the processor 210 may, in conjunction with the receiver 250, monitor travel relative to the alternate route. If the navigation device 200 fails to travel along the alternate route, the processor 210 may be configured to increment the response time associated with

said junction and store the incremented response time in memory 230. The response time may be incremented by a time interval, such as 2 seconds, 5, seconds, 10 seconds, or other suitable time intervals, etc. By incrementing the response time in this manner, the navigation device 200 may be able to calculate an alternate route for said junction based on the incremented response time in the future such that the user is able to travel along the alternate route at an initial deviation.

Fig. 5 illustrates one example embodiment of a method of operating a navigation device 200 for calculating an alternate route based on a response time. The method includes step 500 for monitoring travel along a planned route and step 502 for determining if a navigation device 200 diverges from the planned route. If the navigation device 200 does not diverge from the planned route, the method re-enters step 500 for monitoring travel of the navigation device 200 along the planned route. If, however, the navigation device 200 does diverge from the planned route at a junction, the method includes step 506 for determining if a response time for said junction is available. The response time may be available from memory 230 included in the navigation device 200 and/or another suitable location for storing one or more response times. If a response time for the junction in not available, step 506 is provided for using a default response time, as described above. If a response time is available, step 508 is provided for retrieving the response time associated with the junction. The response time may be, *e.g.*, a global response time, a fixed response time, an incremented response time, etc., retrieved from local memory, *e.g.*, memory 230 included in the navigation device 200, a memory integrated into the processor 210, etc., and/or from remote memory, *e.g.*, memory 306 included in system 302, etc.

Once a response time is defined by either step 506 or step 508, the method includes step 510 for calculating an alternate route based on the response time. The alternate route includes an initial deviation from the current travel route of the navigation device 200, *e.g.*, a turn, exit, etc. The method further includes step 512 for determining whether the navigation device 200 makes or fails to make the initial deviation. If the navigation device 200 follows the alternate route at the initial deviation, the method returns to step 500 for monitoring travel along the new planned route, *i.e.*, the alternate route. If the navigation device 200 fails to travel along the alternate route at the initial deviation, the method includes step 514 for incrementing the response time and step 516 for storing the incremented response time in memory. In this manner, the method assumes that when an initial deviation is missed, insufficient response time was allotted for the navigation device 200 to travel along the alternate route. If the navigation

device 200 diverges from a planned route at the same junction in the future, the navigation device 200 may use said incremented response time to ensure an alternate route calculated based on the incremented response time provides sufficient time for the navigation device 200 to travel along the alternate route at an initial deviation included in said alternate route. When the navigation device 200 fails to travel along the alternate route at the initial deviation, the navigation device 200 re-enters step 504 to calculated another alternate route based on a response time. The response time may be associated with the initial deviation from the prior alternate route or a different junction along the planned route, the alternate route, or a current route of travel of the navigation device 200. Alternately, in at least some embodiments, the navigation device 200 may re-enter step 510 for calculating an alternate route based on one or multiple of the current location of the navigation device, the desired destination, etc.

Referring again to Figs. 2-3, in at least one embodiment according to the present application, a navigation device 200 may transmit the incremented response time. The incremented response time may, for example, be transmitted to a system 302 along communication channel 318, shown in Fig. 3, via a transmitter 320. Alternatively or additionally, one or multiple response times may also be transmitted to the system 302, when a user travelled along the alternate route at the initial deviation. Each type of response time and associated information may be usable by system 302 in one or more embodiments of the present application.

According to at least one embodiment of the present application, a system 302 for providing global response time to a navigation device 200 is disclosed. The system 302 includes a processor 304 to couple to a communication channel 318 to receive at least one response time associated with a junction and to provide a global response associated with said junction to a navigation device and a memory 306, 312 operably coupled to the processor to store the global response time, the global response time being a function of the at least one response time.

According to at least one embodiment of the present application, a method of operating a system 302 connectable to a navigation device 200 is disclosed. The method includes receiving at least one response time associated with a junction, storing a global response time associated with said junction in memory 306 and/or 312, and providing the global response time to a navigation device 200. The global response time is a function of the at least one response time. According to at least one embodiment of the present application, a computer software comprising one or more software modules operable, when executed in an execution

environment, to cause a processor 304 to receive at least one response time associated with a junction, store a global response time associated with said junction in memory 306 and/or 312, and provide the global response time to a navigation device 200. The global response time is a function of the at least one response time.

The global response time is a function of the at least one response time. Referring to Fig. 3, in at least one example embodiment, a system 302 includes a processor 304 configured to average at least one response time such that the global response time includes an average of at least one response time. By averaging multiple response times provided from multiple users, the system 302 may be able to provide a global response time associated with a junction to substantially ensure a user will be able to travel along an alternate route calculated based on the global response time. It should be appreciated that in other embodiment, various mathematical processes may be employed to increase the reliability of one or more global response times. In at least one example embodiment, when multiple response times are received, a processor 304 may exclude the highest N number of response times and the lowest M number of response times (N and M are integer values greater than or equal to 1), thereby protecting the global response times from anomies. N and M may be the same of different values, depending on the particular application of the example. In at least one other example embodiment, a global response time may be a function of a particular number of response times received from users such that after the particular number of response times is received, the global response time becomes fixed. It should be also appreciated that a global response time for a junction may be calculated in one manner, while a global response time for a different junction may be calculated in a different manner.

According to at least one embodiment of the present application, a method of operating a system connectable to a navigation device is illustrated in Fig. 6. The method includes step 600 for receiving a response time associated with a junction. Server 302 illustrates at least one example embodiment of a system for implementing the method of Fig. 6. It should, however, be appreciated that other servers, systems and/or devices may be employed in other example implementation of one or more of the methods disclosed herein. The response time may be received by a processor 304 included in a system 302. The processor 304 is coupled to a communication channel 318 to receive the response time associated with the junction. The at least one response time may include one or multiple response times.

Further, the one or multiple response times received by the processor 304 may include an incremented response time, a response time employed when a user was able to travel along

the alternate route at an initial deviation, etc. When multiple response times are included in the at least one response time, the multiple response times may be received from one or multiple navigation devices 200. In this manner, as a number of response times associated with a junction increases, a global response time, calculated based on the response times, may be more accurate for allowing sufficient time for a navigation device 200 to display an alternate route and a user to travel along the alternate route at the initial deviation. In at least one embodiment, other information may be received by a system 302 in addition to a response time. In one example embodiment, a system 302 may receive a response times associated with a junction and a direction which a navigation device 200 travelled through the junction. In this manner, a global response time may be calculated for each of multiple directions through the junction such that a global response time may be provided to a navigation device 200 for travelling north through a junction and a different global response time may be provided to the navigation device 200 for travelling south through the same junction. It should be appreciated that other directions may be included in information transmitted from a navigation device 20 to a system 302, and vice versa. It should also be appreciated that in other embodiments, one or multiple response times and/or other information may be provided to/from a system 302 to help ensure a global response time based on the same provides a user sufficient time to travel along an alternate route at an initial deviation.

In at least one example embodiment, one or multiple response times may be receives from each navigation device 200, which is connectable to the system 302 for receiving updates. For example, a navigation device 200 may subscribe to a service to receive regular updates of map information. In such an example, one or more response times may be transmitted to the system 302, before, after or simultaneously with transmissions of updated map information. It should be appreciated that in other embodiments, one or multiple response times may be received from one or multiple navigation devices 200 based on different conditions, processes, timing, etc.

Referring again to Fig. 6, the method includes step 602 for storing a global response time associated with said junction. The global response time may be stored in memory associated with a system 302, *e.g.*, memory 306 and/or memory 312 (mass data storage) coupled to the processor 304 through wired or wireless connection 314. It should be appreciated that other memory may be associated with the system 302, locally or remotely, for storing one or multiple global response times such that the global response times may be retrieved and/or accessed by a processor 304 included in the system 302.

The method further includes step 604 for transmitting the global response time to a navigation device 200. The global response time may be transmitted directly to the navigation device 200 through a wired or wireless connection between the navigation device 200 and system 302 and/or through a computer network including one or multiple intermediate devices, e.g., a server, a personal computer, a mobile telephone, PDA, etc. The system 302 may provide, for example transmit, send, broadcast, download, etc., a global response time based on a request from a navigation device 200, automatically upon detection of a navigation device 200, based on an action or a schedule of a system 302, a navigation device 200, and/or a user, etc. As explained above, when the navigation device 200 receives the global response time, the global response time is stored in memory, *e.g.*, memory 230, etc. When the navigation device 200 diverges from a planned route at the junction, the global response time associated with that junction may be retrieved from memory 230 such that an alternate route may be calculated based on the global response time, as illustrated in the example embodiment of Fig. 5.

The server 302 of Fig. 3 provides at least one example embodiment of a system for implementing the method of Fig. 6. In the particular example embodiment, the server 302 is configured to transmit a global response time to the navigation device 200, via a communication channel 318. The global response time may include multiple global response times. Each of the multiple global response times is associated with a different junction. In this manner, the system 302 provides a navigation device 200 with multiple global response times such that a global response time is available for various junctions at which a user may diverge from a planned route. In various embodiments of the present application, system may be configured to provide a global response time for each junction included in map information stored in a navigation devices. In at least some other embodiments, a system 302 may be configured to transmit multiple global response times for each junction within a geographic region. The geographic region may be limited by a system 302, unlimited, within a particular distance of an address programmed into the navigation device 200, set by a user via an input device 220, etc. It should be appreciated that a number of global response times transmitted to a navigation device 200 may be larger or smaller depending on various factors, *e.g.*, bandwidth of a communication channel, map information transmitted to a navigation device 200, a type and/or coverage of a subscription for a navigation device 200, memory 230, etc.

The communication channel 318, as described above, may include a data connection via mobile device, a direct connection through a personal computer via the Internet, etc. In one

example embodiment, a server 302 may be coupled via a transmitter 308 and a receiver 310 to a communication channel 318, *e.g.*, computer network, Internet, LAN, WAN, etc. A navigation device 200 may periodically connect to the communication channel 318 to provide one or multiple response times to the system 302 and/or receive one or multiple global response times provided by the system 302. It should be appreciated that in other embodiments, a navigation device 200 may be consistently in communication with the system 302 through a communication channel 318. Further, a communication channel 318 may include one or multiple communication channels. In at least one example, a system 302 may transmit through one communication channel and receive through a different communication channel.

In at least the embodiment illustrated in Fig. 3, the processor 304 is coupled to the communications channel 318 via a transmitter 308 and a receiver 310. It should be appreciated that the transmitter 308 and receiver 310 may be included in a single component. In at least one example, a transmitter 308 and a receiver 310 are included in a network interface device for communicating with the Internet. In other embodiments of the present application, a transmitter 308 and/or receiver 310 may be integrated into a processor 304.

According to at least one embodiment of the present application, a system for calculating an alternate route is disclosed. The system includes a navigation device 200 including a receiver 322 and a server 302 including a transmitter 308 to provide at least one global response time to the navigation device 200. The navigation device 200 includes a processor 210 to calculate an alternate route based on the global response time, when the navigation device 200 diverges from the planned route at a junction, such that an estimated travel time to an initial deviation included in the alternate route is at least equal to the global response time. According to at least one other embodiment, a method for calculating an alternate route based on a global response time is disclosed. The method includes providing a global response time to a navigation device 200, receiving a global response time, storing the global response time in memory 230, and calculating an alternate route based on the global response time, when the navigation device 200 diverges from the planned route at a junction, such that an estimated travel time to an initial deviation included in the alternate route is at least equal to the global response time.

It should be appreciated that a computer-readable medium may include a computer-executable for performing each of the methods disclosed herein, alone or in various combinations.

Alternative embodiments of the invention can be implemented as a computer program

product for use with a computer system, the computer program product being, for example, a series of computer instructions or program segments stored on a tangible data recording medium (computer readable medium), such as a diskette, CD-ROM, ROM, or fixed disk, or embodied in a computer data signal, the signal being transmitted over a tangible medium or a wireless medium, for example, microwave or infrared. The series of computer instructions or program segments can constitute all or part of the functionality of the method of embodiments described above, and can also be stored in any memory device, volatile or non-volatile, such as semiconductor, magnetic, optical or other memory device.

It will also be appreciated that whilst various aspects and embodiments of the present invention have heretofore been described, the scope of the present invention is not limited to the particular arrangements set out herein and instead extends to encompass all arrangements, and modifications and alterations thereto, which fall within the scope of the appended claims.

Whilst embodiments described in the foregoing detailed description refer to GPS, it should be noted that the navigation device may utilize any kind of position sensing technology as an alternative to (or indeed in addition to) GPS. For example the navigation device may utilize using other global navigation satellite systems such as the European Galileo system. Equally, it is not limited to satellite based but could readily function using ground based beacons or any other kind of system that enables the device to determine its geographic location.

It will also be well understood by persons of ordinary skill in the art that whilst the preferred embodiment implements certain functionality by means of software, that functionality could equally be implemented solely in hardware (for example by means of one or more ASICs (application specific integrated circuit)) or indeed by a mix of hardware and software. As such, the scope of the present invention should not be interpreted as being limited only to being implemented in software.

Lastly, it should also be noted that whilst the accompanying claims set out particular combinations of features described herein, the scope of the present invention is not limited to the particular combinations hereafter claimed, but instead extends to encompass any combination of features or embodiments herein disclosed irrespective of whether or not that particular combination has been specifically enumerated in the accompanying claims at this time.

Claims

What is claimed is:

1. A system (302) for providing global response time to a navigation device (200), the navigation device (200) including a processor (210) to calculate an alternate route based on a global response time, the system (302) comprising:

a processor (304) to couple to a communications channel (318) to receive at least one response time associated with a junction and to provide a global response associated with said junction to at least one navigation device; and

a memory (306, 312) operably coupled to the processor to store the global response time, the global response time being a function of the at least one response time.

2. The system according to claim 1, wherein the at least one response time includes multiple response times associated with said junction, the processor (304) being configured to average the multiple response times; the global response time including the average of the multiple response times.

3. The system according to claim 1 or 2, wherein the processor is coupled to the communications channel (318) through a receiver (310) and a transmitter (308).

4. The system according to claim 3, wherein the communications channel (318) includes a computer network.

5. The system according to any of claims 1-4, wherein the global response time includes multiple global response times, each of the multiple global response time being associated with a different junction.

6. A method of operating a system (302) connectable to a navigation device (200), the method comprising:

receiving at least one response time associated with a junction;

storing a global response time associated with said junction in memory (306, 312), the global response time being a function of the at least one response time; and

providing the global response time to at least one navigation device (200).

7. A method according to claim 6, wherein the at least one response time includes multiple response times associated with said junction, further comprising averaging the multiple response times, wherein the global response time includes the average of the multiple response times.

8. A method according to claim 6 or 7, wherein providing the global response includes transmitting multiple global response times, each of the multiple global response times being associated with a different junction.

9. A method according to any of claims 6-8, further comprising storing the at least one response time associated with a junction in memory (306, 312).

10. A method according to any of claims 6-9, further comprising calculating an alternate route to a desired destination based on the global response time, when a navigation device diverges from a planned route, such that an estimated travel time to an initial deviation included in the alternate route is at least equal to the response time.

11. A computer readable medium including program segments for, when executed on a processor (304) of a system (302), causing the system (302) to implement the method of any of claims 6-11.

12. A computer software comprising one or more software modules operable, when executed in an execution environment, to cause a processor (304) to:

receive at least one response time associated with a junction;

store a global response time associated with said junction in memory (306, 312), the global response time being a function of the at least one response time; and

provide the global response time to at least one navigation device (200).

13. A computer software according to claim 12, wherein the at least one response time includes multiple response times associated with said junction;

wherein the one or more modules is further operable, when executed in an execution environment, to cause the processor (304) to average the multiple response times, the global response time including the average of the multiple response times.

14. A computer software according to claim 12 or 13, wherein the global response time includes multiple global response times, each of the multiple global response times being associated with a different junction.

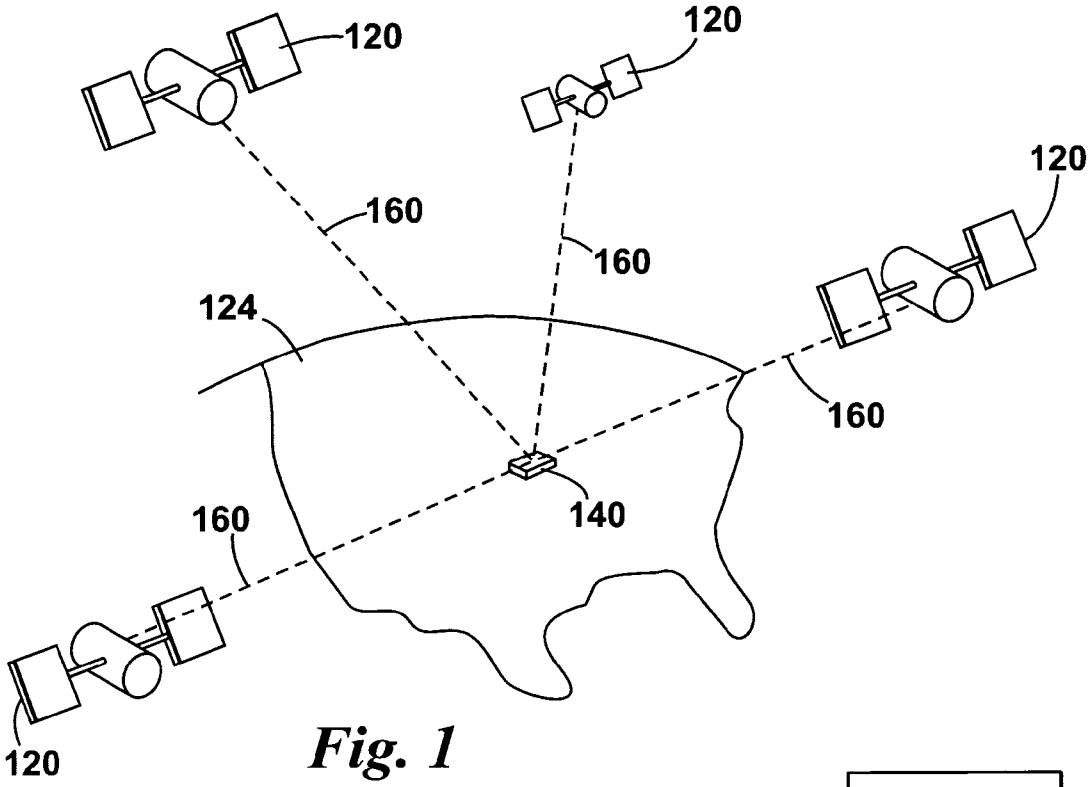
120
120
120
160
160
124
160
140
160
120

Fig. 1

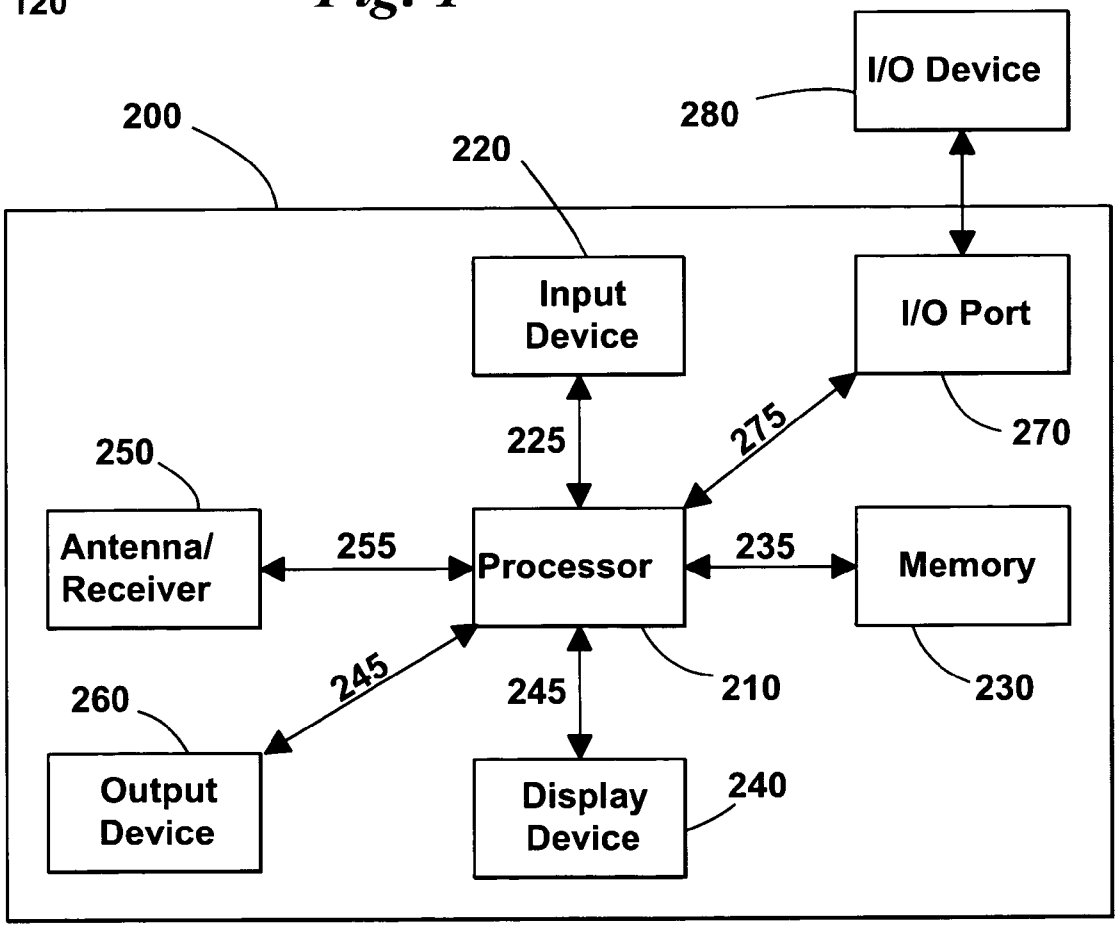
200
220
I/O Device
280
Input Device
I/O Port
225
275
270
250
Antenna/ Receiver
255
Processor
235
Memory
245
245
210
230
260
Output Device
Display Device
240

Fig. 2

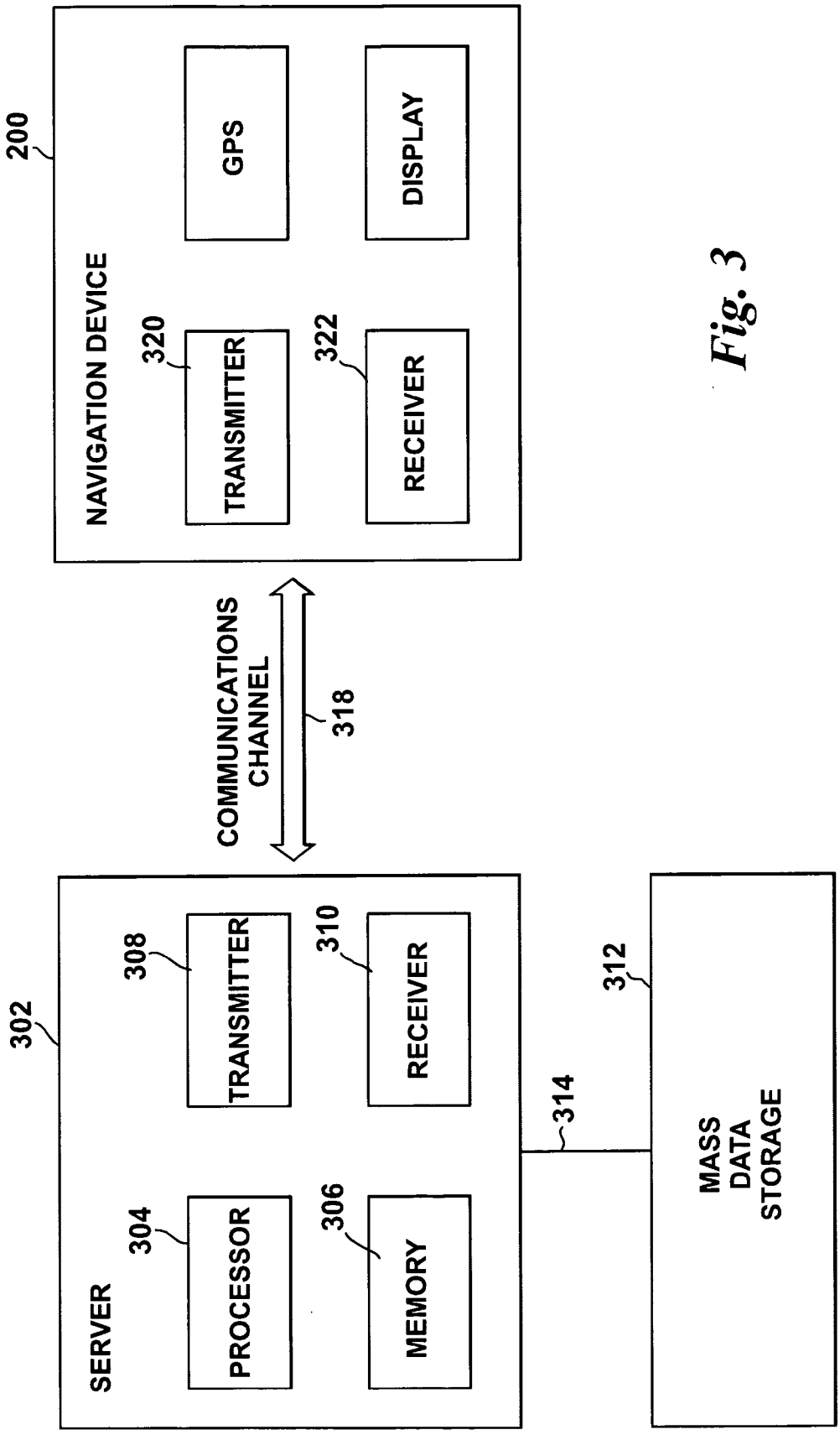
200
NAVIGATION DEVICE
GPS
DISPLAY
320
TRANSMITTER
322
RECEIVER
COMMUNICATIONS CHANNEL
318
302
SERVER
308
TRANSMITTER
310
RECEIVER
304
PROCESSOR
306
MEMORY
314
312
MASS DATA STORAGE

Fig. 3

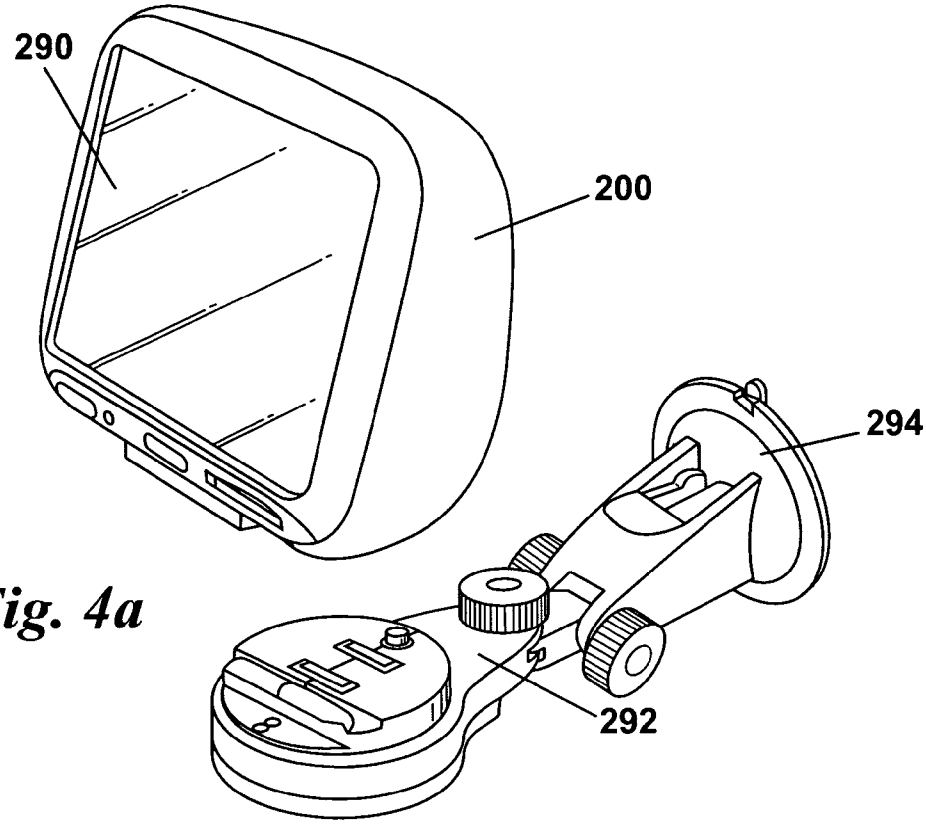

Fig. 4a

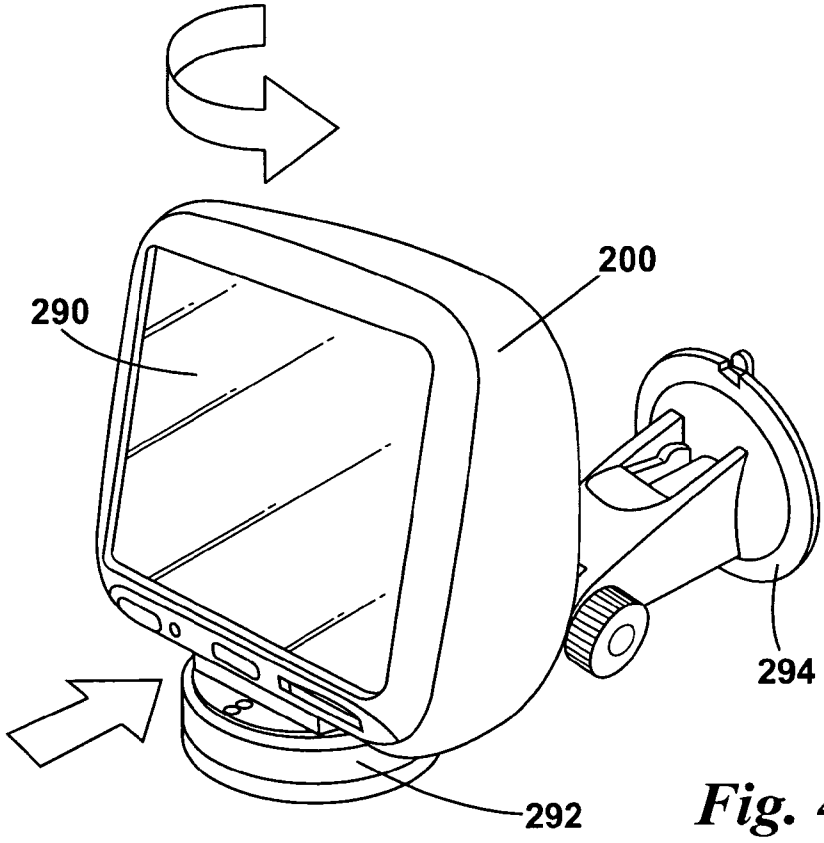

Fig. 4b

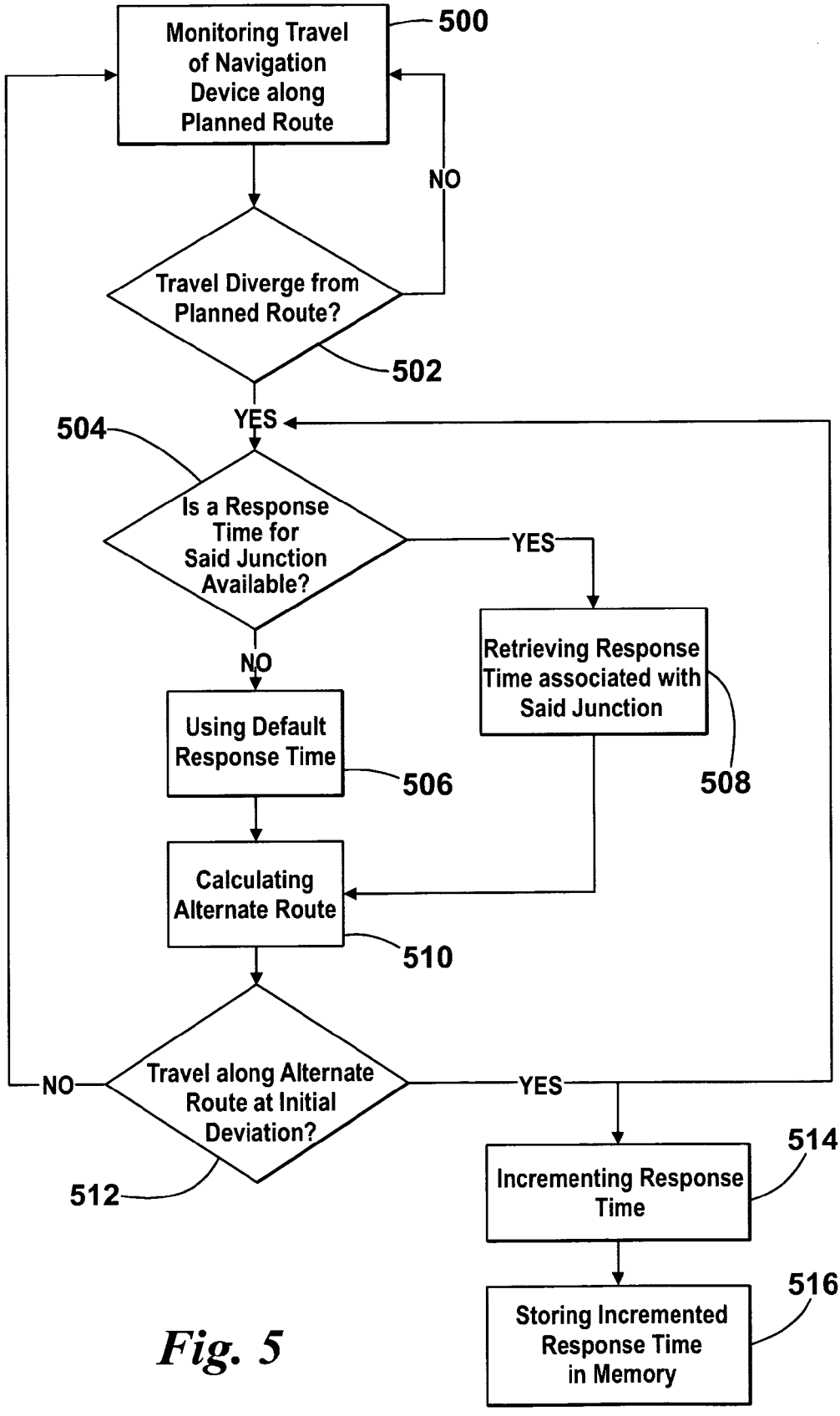
Monitoring Travel of Navigation Device along Planned Route
500
NO
Travel Diverge from Planned Route?
502
YES
504
Is a Response Time for Said Junction Available?
YES
Retrieving Response Time associated with Said Junction
508
NO
Using Default Response Time
506
Calculating Alternate Route
510
Travel along Alternate Route at Initial Deviation?
NO
YES
512
Incrementing Response Time
514
Storing Incremented Response Time in Memory
516

Fig. 5

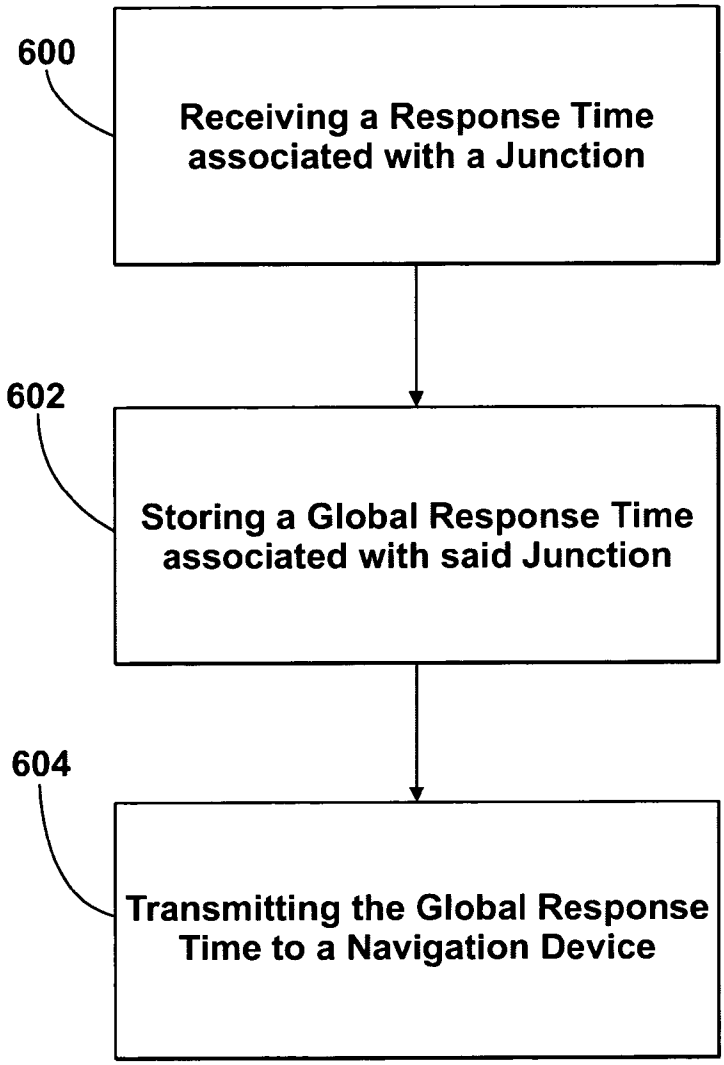
600
Receiving a Response Time associated with a Junction
602
Storing a Global Response Time associated with said Junction
604
Transmitting the Global Response Time to a Navigation Device

Fig. 6

INTERNATIONAL SEARCH REPORT

International application No
PCT/EP2008/068227

A. CLASSIFICATION OF SUBJECT MATTER
INV. G01C21/34 G01C21/32

According to International Patent Classification (IPC) or to both national classification and IPC

B. FIELDS SEARCHED

Minimum documentation searched (classification system followed by classification symbols)
G01C

Documentation searched other than minimum documentation to the extent that such documents are included in the fields searched

Electronic data base consulted during the international search (name of data base and, where practical, search terms used)
EPO-Internal, WPI Data

C. DOCUMENTS CONSIDERED TO BE RELEVANT

Category*	Citation of document, with indication, where appropriate, of the relevant passages	Relevant to claim No.
X	US 6 278 942 B1 (MCDONOUGH WILLIAM [US]) 21 August 2001 (2001-08-21) column 8, lines 1-67 the whole document	1-14
X	US 6 545 637 B1 (KRULL JAY DEE [US] ET AL) 8 April 2003 (2003-04-08) paragraphs [0033], [0058], [0065] - [0067]	1-14
X	EP 1 914 515 A (LG ELECTRONICS INC [KR]) 23 April 2008 (2008-04-23) paragraphs [0042], [0060], [0072]	1-14
X	US 5 291 414 A (TAMAI HARUHISA [US] ET AL) 1 March 1994 (1994-03-01) column 4, lines 30-59	1-14

-/--

[X] Further documents are listed in the continuation of Box C. [X] See patent family annex.

* Special categories of cited documents :

"A" document defining the general state of the art which is not considered to be of particular relevance

"E" earlier document but published on or after the international filing date

"L" document which may throw doubts on priority claim(s) or which is cited to establish the publication date of another citation or other special reason (as specified)

"O" document referring to an oral disclosure, use, exhibition or other means

"P" document published prior to the international filing date but later than the priority date claimed

"T" later document published after the international filing date or priority date and not in conflict with the application but cited to understand the principle or theory underlying the invention

"X" document of particular relevance; the claimed invention cannot be considered novel or cannot be considered to involve an inventive step when the document is taken alone

"Y" document of particular relevance; the claimed invention cannot be considered to involve an inventive step when the document is combined with one or more other such documents, such combination being obvious to a person skilled in the art.

"&" document member of the same patent family

Date of the actual completion of the international search	Date of mailing of the international search report
18 May 2009	29/05/2009

Name and mailing address of the ISA/	Authorized officer
European Patent Office, P.B. 5818 Patentlaan 2 NL - 2280 HV Rijswijk Tel. (+31-70) 340-2040, Fax: (+31-70) 340-3016	Dragomir, Adrian

INTERNATIONAL SEARCH REPORT

International application No
PCT/EP2008/068227

C(Continuation). DOCUMENTS CONSIDERED TO BE RELEVANT

Category*	Citation of document, with indication, where appropriate, of the relevant passages	Relevant to claim No.
X	EP 0 751 376 A (AISIN AW CO [JP]) 2 January 1997 (1997-01-02) column 11, paragraph 15-50	1-14
X	US 5 262 775 A (TAMAI HARUHISA [US] ET AL) 16 November 1993 (1993-11-16) column 6, paragraph 27-67	1-14
X	US 6 026 346 A (OHASHI MIKIO [JP] ET AL) 15 February 2000 (2000-02-15) column 1, lines 1-66	1-14
A	US 7 356 405 B1 (NESBIT DAVID W [US]) 8 April 2008 (2008-04-08) column 9, paragraph 1-60 - column 10, paragraph 1-60 the whole document	1-14
A	WO 98/26253 A (MAGELLAN DIS INC [US]) 18 June 1998 (1998-06-18) page 5, paragraphs 2,3 the whole document	1-14

INTERNATIONAL SEARCH REPORT

Information on patent family members

International application No
PCT/EP2008/068227

Patent document cited in search report	Publication date	Patent family member(s)	Publication date
US 6278942 B1	21-08-2001	AT 371243 T	15-09-2007
		DE 60130054 T2	15-05-2008
		EP 1146496 A2	17-10-2001
		JP 2001304892 A	31-10-2001
US 6545637 B1	08-04-2003	US 7409288 B1	05-08-2008
		US 6947838 B1	20-09-2005
		US 2003158660 A1	21-08-2003
EP 1914515 A	23-04-2008	KR 20080034638 A	22-04-2008
		US 2008091348 A1	17-04-2008
US 5291414 A	01-03-1994	NONE	
EP 0751376 A	02-01-1997	DE 69626893 D1	30-04-2003
		DE 69626893 T2	13-11-2003
		JP 9014984 A	17-01-1997
		US 5926118 A	20-07-1999
US 5262775 A	16-11-1993	NONE	
US 6026346 A	15-02-2000	JP 3559847 B2	02-09-2004
		JP 11064024 A	05-03-1999
US 7356405 B1	08-04-2008	NONE	
WO 9826253 A	18-06-1998	AU 4659197 A	03-07-1998
		US 6405130 B1	11-06-2002