R. JANNEY.

POWER OPERATED CONTROLLING MECHANISM FOR FLUID ACTUATED MACHINES.

APPLICATION FILED OCT. 14, 1911.

1,068,589.

Patented July 29, 1913.

2 SHEETS—SHEET 1.

Fig. 2.

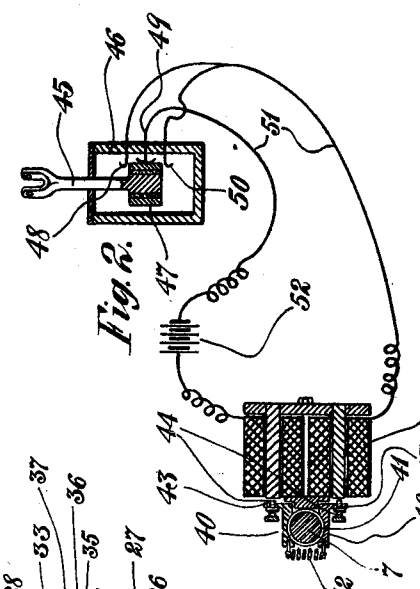

Fig. 1.

Witnesses:

F. H. Elliott

L. L. Markel

Inventor:

Reynold Janney

By his Attorneys,

Sutherland & Audubon

R. JANNEY.

POWER OPERATED CONTROLLING MECHANISM FOR FLUID ACTUATED MACHINES.

APPLICATION FILED OCT. 14, 1911.

1,068,589.

Patented July 29, 1913.

2 SHEETS—SHEET 2.

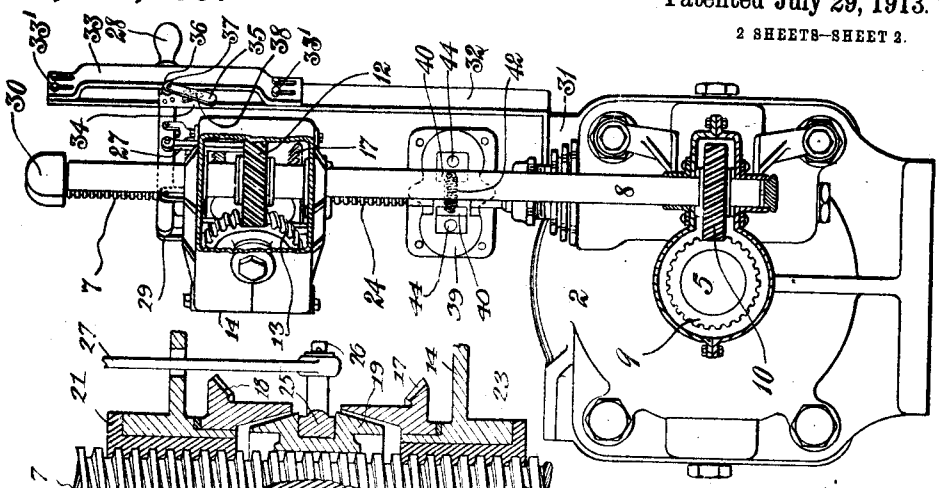

Fig. 4.

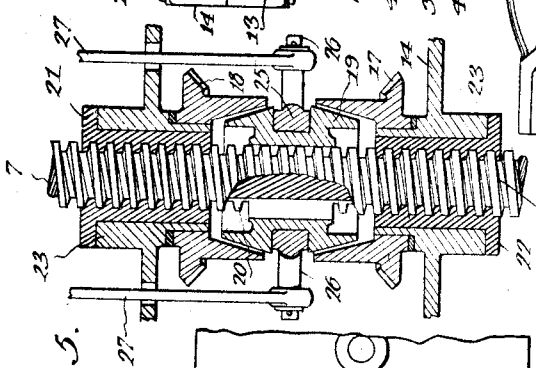

Fig. 5.

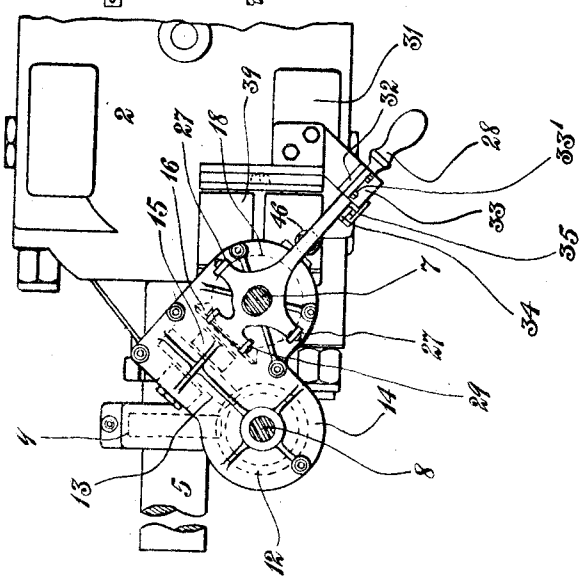

Fig. 3.

Witnesses:

F. H. Elliott

L. L. Markel.

Inventor:

Reynold Janney

By his Attorneys,

Sutherland & Anderson.

UNITED STATES PATENT OFFICE.

REYNOLD JANNEY, OF NEW YORK, N. Y.

POWER-OPERATED CONTROLLING MECHANISM FOR FLUID-ACTUATED MACHINES.

1,068,589. Specification of Letters Patent. Patented July 29, 1913.

Application filed October 14, 1911. Serial No. 654,663.

To all whom it may concern:

Be it known that I, REYNOLD JANNEY, a citizen of the United States, residing at New York, in the county of New York and State of New York, have invented certain new and useful Improvements in Power-Operated Controlling Mechanism for Fluid-Actuated Machines, of which the following is a specification.

This invention relates to power-operated controlling mechanism for fluid-actuated machines. As will be inferred from the statement just made, said controlling mechanism can be employed with utility in many different connections for instance on a ship for effecting the action of a rudder, a turret or a gun or for causing the operation of hoists, winches, capstans and similar appliances. In devices of the foregoing and other kinds, it is important that the operator be able to effect the action of the controlling mechanism with as little outlay of manual power as possible, this being especially the case in operating guns and turrets where he is required during such operation simultaneously to be sighting through a telescope. Not only is the application of a minimum amount of manual power an important consideration, but it is equally desirable that the operator be required to move his hand through as short a distance as consistent with the ultimate results desired.

While, as will be gathered from the observations already made I do not restrict myself to the employment of the controlling mechanism in conjunction with any particular form of apparatus, nevertheless I have, solely for the purpose of showing its advantages, represented the same, in the accompanying drawings forming part of the present specification, as part of or in combination with what is known as "hydraulic variable speed gear device." I might also mention that a device of this nature takes various forms, and it will be understood, of course that the one shown in said drawings is common in this art, being shown for illustration in Letters Patent No. 924,787 granted to me June 15, 1909 to which reference may be had. A hydraulic variable speed gear device involves in its organization a regulator, and in this particular device this regulator is utilized to either change the direction of movement of or to vary the speed of a shaft or equivalent member from which the rudder, turret or other part receives its motion. Associated with this regulator is a controlling member which in the present instance is in the form of a shaft, although this is not essential, it being one of the primary purposes of the invention to effect the operation of this controlling member by power and this power may be either continuous or intermittent. The power-operated member of whatever its character may be, is preferably thrown at desired intervals at will, into operative or driving connection with the controlling member, and the latter in turn transfers its effect to the regulator whereby the necessary regulation can be accomplished, and as will be understood this regulation may vary radically. In a hydraulic variable speed gear device, the regulation is to vary the stroke of a piston or pistons in the pump section or end thereof or to change the direction of movement of said pistons whereby the engine-operated shaft can be correspondingly governed or its speed varied or its direction of movement changed as already indicated. This "regulator" as I have termed it, therefore, constitutes a means for throwing into and out of action an engine or motor or for performing some other suitable function.

In said accompanying drawings I have shown one of the many forms of embodiment of my invention, and I will hereinafter set forth fully the construction represented by said drawings simply for the purpose of enabling those skilled in the art to practice the invention. I may depart materially and in many respects from such showing within the scope of my invention covered in the claims following said description.

Referring to said drawings: Figure 1 is a side elevation partly in section of controlling mechanism including my invention and shown as associated with a hydraulic variable speed gear device. Fig. 2 is a sectional diagram of a magnet and certain electrical connections hereinafter described. Fig. 3 is a plan view partially in section of the parts shown in Fig. 1, the section being on the line 3—3 of Fig. 1, and, Fig. 4 is an end elevation also partly in section of the same. Fig. 5 is a view upon a larger scale of some of the parts shown in Fig. 1.

Like characters refer to like parts throughout the several figures of the drawings.

As already intimated I may employ my control mechanism in connection with various kinds of fluid actuated machines or devices. It is shown associated with or as forming part of a hydraulic variable speed gear device which as is well-known comprises a pump section or end as 2, an engine section or end 3 and a valve or mid plate 4 which parts may be related in any suitable manner, for instance as illustrated fully in the Letters Patent to which I have already alluded. As a part of such a hydraulic variable speed gear device or machine is what is known as a "tilting box" 2', and this tilting box (see dotted lines in Fig. 1) constitutes a regulator for the pump and through the pump, for the engine. In some other type of fluid operable machine the regulator would naturally be of a different form, it being always understood that I do not restrict myself to any particular kind of regulator. In a hydraulic variable speed gear device said regulator or tilting box has a neutral or ineffective position, and when it is in such position, the pistons at the pump end are idle. By swinging said regulator or tilting box from said neutral or ineffective position in opposite directions, the pistons may be operated and their strokes progressively increased as the regulator moves from said neutral or zero position or such strokes can be reversed by said regulator. In connection with the pump end is a shaft 5, while in connection with the engine end is a shaft 6. It is the custom to rotate this shaft 5 by power and various means are provided in practice for this purpose. When the regulator or tilting box is in its neutral or ineffective position, the shaft 6 is at rest, while by moving said regulator from said neutral position, said shaft 6 can be rotated in either direction or its speed governed. The foregoing is a brief description of an existing hydraulic variable speed gear device, and it is approximately the same as that shown in the Letters Patent referred to.

To operate the regulator or tilting box 21 which is generally housed in the casing of the pump section or end 2 a control member is provided, said control member, as shown, consisting of a shaft operatively connected to the regulator. It is needless for me to illustrate and describe the connection between this control shaft and regulator or tilting box as the same in itself forms no part of the present invention and is also common. At the will of the operator this control shaft 7 or its equivalent is thrown into driving relation with a power operated member which as already intimated may be intermittently or continuously driven and which as shown consists of a shaft 8 receiving its motion from the power operated shaft 5. The said shaft 8 may be operated from the shaft 5 in any suitable way for instance by means of gearing, the shaft 5 for this purpose being shown equipped with a spiral gear 9 in mesh with a spiral gear 10 said gears being fixed in some convenient manner to the respective shafts, by reason of which as long as the shaft 5 is in action, the shaft 8 will also be. In the present case the control shaft 7 is normally at rest, but it will be clear that when it is thrown into driving connection by the operator, with the shaft 8, said control shaft will be operated by power. Various means may be employed for throwing the two shafts 7 and 8 into driving connection, and the interposed mechanism is preferably of such kind that the rotation of the control shaft in either direction from its neutral position may be effected at will. The means shown for this purpose will now be set forth. The shaft 8 has a longitudinally disposed keyway 11 to receive a key on a gear as 12 which as shown is spiral and which meshes with the complemental gear 13. From this it will be understood that the gear 12 can be moved longitudinally of the shaft 8. The two gears 12 and 13 are housed in the casing or boxing 14 constituting a suitable carrier and which has openings in opposite walls through which the control shaft 7 and the operating shaft 8 therefor extend. The gear 13 is rigid with the shaft 15 for example by making the two parts integral and to said shaft 15 is fixed a second gear 16 of bevel type in constant mesh with bevel gears 17 and 18 surrounding the control shaft 7. From this it will be obvious that the two bevel gears 17 and 18 are rotated in opposite directions by virtue of their described connection with the operating shaft 8, and such rotation is normally continuous or at least continuous as long as the shaft 5 of the pump end 2 is in operation. The bevel gears 17 and 18 are adapted to be alternately clutched to the control shaft 7, and it will be evident that when one of said bevel gears (17 and 18) is clutched to said control shaft, the latter will be driven in one direction, while when the other of said bevel gears (17 and 18) is clutched to said shaft, said control shaft will be turned in the opposite direction by reason of which the pump or engine regulator or tilting box may be moved either way from the neutral or ineffective position thereof.

Surrounding the control shaft 7 and keyed thereto is a clutch member 19 which as shown has a key fitted in the longitudinally-extending keyway 20 in the control shaft 7. Normally the clutch member or block 19 is out of clutched relation with both gears 17 and 18, but when it is thrown into such relation with one of them, the control shaft 7 will be rotated, the direction of motion thereof depending upon which of the two

said bevel gears (17 and 18) is in driving connection with said control shaft. The said bevel gears 17 and 18 and the intermediate clutch member or block 19 are inclosed in the casing or boxing 14. The clutch member 19 is of the friction type, having opposite frusto-conical or tapered portions to alternately enter correspondingly shaped openings or seats in the two gears 17 and 18.

Fixed in the openings of the casing or housing 14 through which the control shaft 7 passes are bushings or tubular studs 21 and 22 and surrounding said openings are bosses each denoted by 23, said bosses rotatively supporting said gears 17 and 18. The bushings 21 and 22 are interiorly threaded and therefore constitute nuts, said nuts or bushings engaging the threaded portion 24 of the control shaft 7 which threaded portion extends practically for the greater part of the length of said control shaft. The body of the clutch member 19 has an annular circumferential groove to receive the ring 25 provided with trunnions 26 to which the inner ends of the rods or links 27 are jointed, the outer ends of said rods or links being similarly connected with an operating member or actuator such as the hand lever 28 at opposite sides thereof. The hand lever 28 is supported by a suitable bearing as 29 upon the outer surface of the outer wall of the case or housing 14, said wall having slots for the passage of the two links or connecting rods 27. There may be cases where the lever 28 or its equivalent will not be operated directly by hand, although ordinarily its shifting movement whether effected manually or mechanically is primarily governed by the operator.

The control shaft 7 and the operating shaft 8 therefor, may as illustrated and as a matter of security or strength, be connected together at their outer ends by the bridging or brace member 30 in which the outer ends of said two shafts rotate and which, as will be evident, effectually steadies the outer portions of said two shafts.

It will be assumed that the shaft 5 is being rotated by power, that the tilting box in the pump section 2 is in its neutral position, and that, therefore, the shaft 6 is at rest, it being understood that the clutch member 19 is in its mid or intermediate position. As the shaft 5 is being rotated it follows that the shaft 8 owing to its described connections with said shaft 5 is also rotated and that the gears 17 and 18 are being oppositely rotated owing to their connection as set forth with said shaft 8. With the clutch member, however, in said mid position, the said gears 17 and 18 are running idly or neither is transferring its effect to the control shaft 7. To rotate the control shaft it is necessary to either swing the lever 28 inward or outward. If said lever 28 be swung outward, the clutch member 19 will engage the gear 18, so that the latter can then transfer its effect to the control shaft 7 to shift the regulator from its neutral position to a piston or engine starting position, while if the said lever 28 be swung inward to carry the clutch member 19 into engagement with the gear 17, the said control shaft will be rotated in the opposite direction.

It will be assumed that the lever 28 is manipulated to throw the clutch member 19 into engagement with the outer bevel gear 18 to rotate the shaft 7. As soon as said shaft 7 commences to rotate the nuts 21 and 22 will be fed outward together with the casing 14, by the rotating shaft 7 thereby tending to carry the bevel gear 18 away from the said clutch member 19, so that to maintain the clutched relation, it will be necessary for the operator to thrust the lever farther outward. If, therefore, a very small amount of rotation of the control shaft is desired, it is necessary to move the said lever 28 but a comparatively small distance. The greater the amount of movement, however, of the said control shaft that is desired, the greater will be the range of movement of the lever 28. The same result follows when the shaft 7 is to be rotated in the opposite direction except that in this case the said lever 28 will be swung inward. There is, therefore, broadly, means provided for counteracting the manual effect or at least the effect of the lever 28 or its equivalent. In other words in the construction shown, said lever or some analogous device is swung in one direction so as to constantly maintain a driving relation, while there is another means in action which counteracts or tends to break said driving relation. While I do not limit myself to any particular organization for obtaining this function, the means illustrated and already described, is satisfactory. As anticipated by me, however, I can by the construction described give the regulator or tilting box in the pump section a very slight movement or a maximum movement and in either direction from the neutral position thereof.

I prefer to provide means for definitely or positively indicating when the lever 28 or its equivalent is in a neutral position or that which it occupies when the regulator or tilting box is in its neutral position, and although said means may vary as to character and may in fact be omitted altogether that shown and now to be described meets the desired conditions. By such a means, as will be clear, nothing is left to hazzard or guess, the operator or attendant being positively apprised when said lever is in its neutral position. I might state that this indicating means is of such a nature that the lever may be readily moved when necessary or required in either direction from its

normal or neutral position. Rising from a shelf or other support as 31 on the pump section 2 is a standard or upright 32 to which is fastened a strap 33 longitudinally adjustable and held in an adjusted position by screws 33′ extending through longitudinal slots in said strap and tapped into said standard. The strap 33 is bent so as to present with the supporting standard 32 a guide slot in which the lever 28 moves. Said lever 28 is shown provided with a lateral arm 34 to which is pivoted the feeler or finger 35 having at its free end a stud such as an anti-friction roller 36 adapted to enter the notch 37 in the adjacent edge of the strap 33 when the lever 28 is in its neutral or intermediate position, a coiled spring 38 acting against said finger 35 to normally press the anti-friction roller 36 against the strap. When the anti-friction roller 36 is in the notch 37, it is a simple matter to swing the said lever either inward or outward, the anti-friction roller 36 on such action riding out of the notch 37 neither inward or outward along the straight edge of the strap 33. When the lever 28 reaches its neutral position, the anti-friction roller 36 will be thrown into said notch 37 by the spring 38 thereby positively indicating to the operator that the lever is in said intermediate position.

There are cases where the control shaft 7 is subjected to vibration and to prevent such a condition I prefer to employ means for holding the shaft against accidental vibration or motion when the several parts hereinbefore described are in their neutral positions, and although various means may be provided in this particular connection, a friction brake of some suitable kind is satisfactory, in that such a device does not prevent free motion of said control shaft when it becomes necessary to turn the same to shift a regulator or tilting box or perform some similar act. Supported by the standard 32 or otherwise is a magnet 39 to the frame of which are pivoted levers 40 cooperative with a drum 41 on the control shaft 7, the active portions of said levers being circular to conform to the radius of and to partially straddle said drum when said levers are in their active relations, such relation being normally maintained by a spring 42 connected to the free portions of said levers and tending, as will be understood, to constantly press the curved portions or shoes of the brake levers against the brake drum 41. The armatures 43 for the coils of said magnet are connected to the brake elements or levers 40 and may in fact be respectively integral therewith as shown. It follows that when the magnet 39 is energized, the armatures 43 are attracted by the coils thereof, so as to separate or spread the two brake levers 41, thus stretching the spring 42 and hence disengaging said levers from the drum 41 or control shaft 7. When the magnet is deënergized the spring 42 at once moves said levers 40 into engaging relation with said control shaft or the drum 41 thereof.

The brake mechanism practically normally locks the control shaft against accidental movement. Tapped through the armatures 43 are screws 44 constituting suitable adjustable stops and which engage against the cores of the two coils of the magnet and thereby prevent said armatures coming directly into engagement with said cores. The lever 28 is provided with a circuit controlling member 45 fitted in an oil box 46 sustained by the case or housing 14 and which has a circuit closing ring 47 insulated from the body thereof and coöperative with contacts 48, 49 and 50 in said oil box 46, said contacts being connected by wires all denoted by 51 with the magnet 39, the magnet circuit including the battery 52. It, therefore, follows that on the initial outward movement of the hand lever 28, the ring 47 will bridge the contacts 48 and 49 to thereby effect the energization of said magnet 39 and that on the initial inward movement of said hand lever, said ring bridges the contacts 49 and 50 to also effect the energization of said magnet and in each case to release the brake mechanism in the manner already described.

What I claim is:

1. The combination of the rotary control member of a fluid operable machine, a pair of oppositely rotative power transferring members, means for putting either of said power transferring members into operative relation with said control member, a carrier for said power transferring members, and means for shifting said carrier on the rotation of said rotary control member in a direction for breaking the operative connection between said rotary control member and the power transferring member to which it is for the time connected.

2. The combination of the rotary control member of a fluid operable machine, a rotary power transferring member, means for putting said power transferring member into driving relation with said control member, a carrier for said power transferring member, and means for shifting said carrier when said driving relation is present, said means tending to break said driving relation.

3. The combination of a rotary control member of a fluid operable machine, a pair of oppositely rotative power transferring members surrounding said control member, a clutch for alternately clutching said power transferring members to said control member, a carrier for said power transferring members, and means operative on the rota-

tion of said rotary control member, for shifting said carrier in a direction to break the clutched relation.

4. The combination of the rotary control member of a fluid operable machine a pair of gears loosely surrounding the said control member, a third gear in mesh with the other gears, for rotating said pair of gears in opposite directions, means for positively rotating said third gear, a carrier for supporting the several gears, a clutch for alternately clutching said pair of gears to said control member, a shifting device for the clutch, and means tending to shift said carrier when said control member is rotated and tending to break the clutched relation between one of said pair of gears and said clutch.

5. The combination of the rotary control member of a fluid operable machine, said rotary control member being threaded, a carrier having a relatively fixed nut operable by said threaded portion, a power transferring member supported by said carrier, and means for putting said power transferring member into driving relation with said rotary control member and said rotary control member when rotated serving to operate the nut and thereby said carrier in a direction to break said driving relation.

In testimony whereof I affix my signature in presence of two witnesses.

REYNOLD JANNEY.

Witnesses:
HEATH SUTHERLAND,
FLORA STRONG.