Dec. 25, 1934. A. D. EVANS 1,985,856

SHEARS

Filed Dec. 15, 1933 5 Sheets-Sheet 1

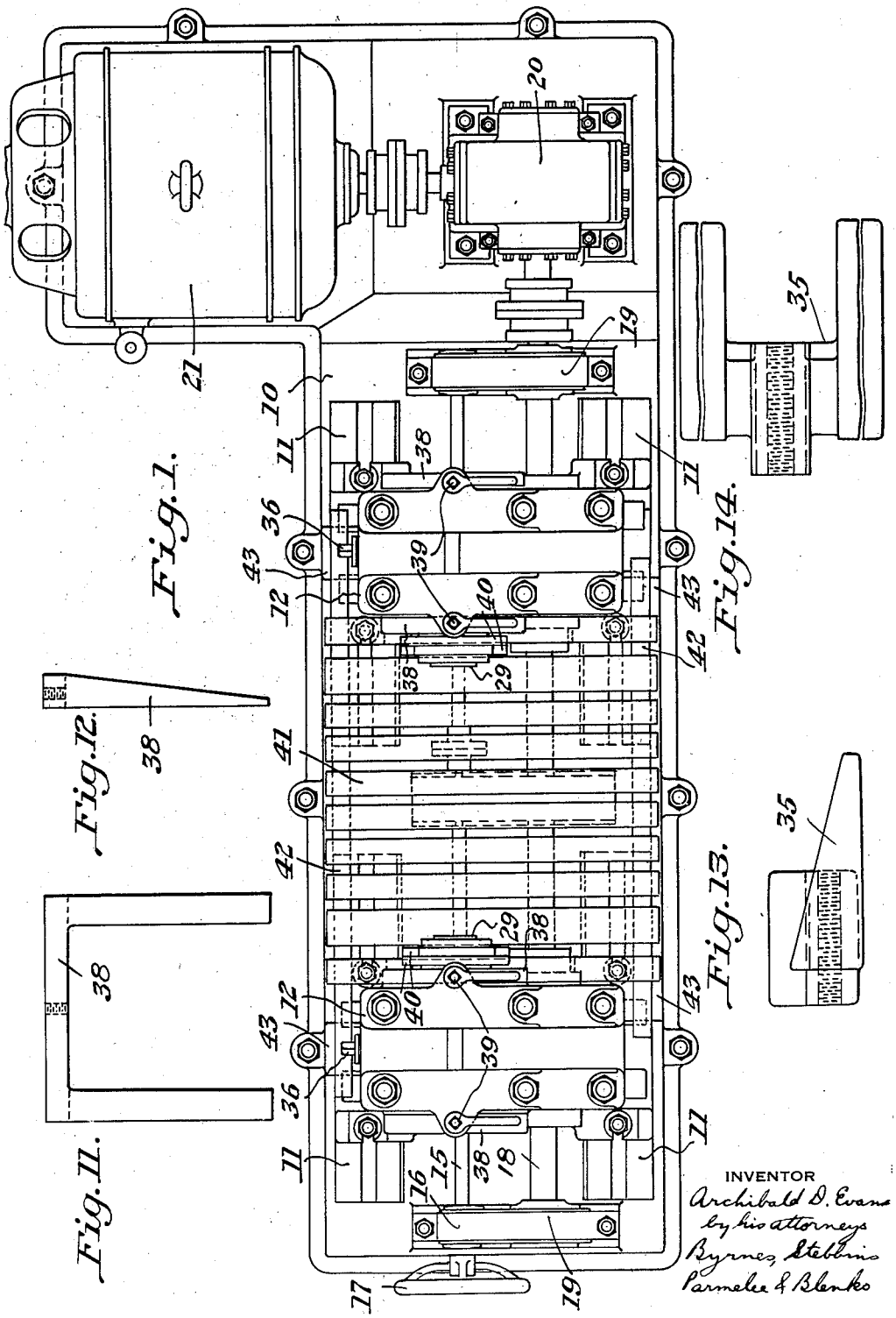

Fig. 1.

Fig. 14.

Fig. 12.

Fig. 13.

Fig. 11.

Dec. 25, 1934. A. D. EVANS 1,985,856

SHEARS

Filed Dec. 15, 1933 5 Sheets-Sheet 2

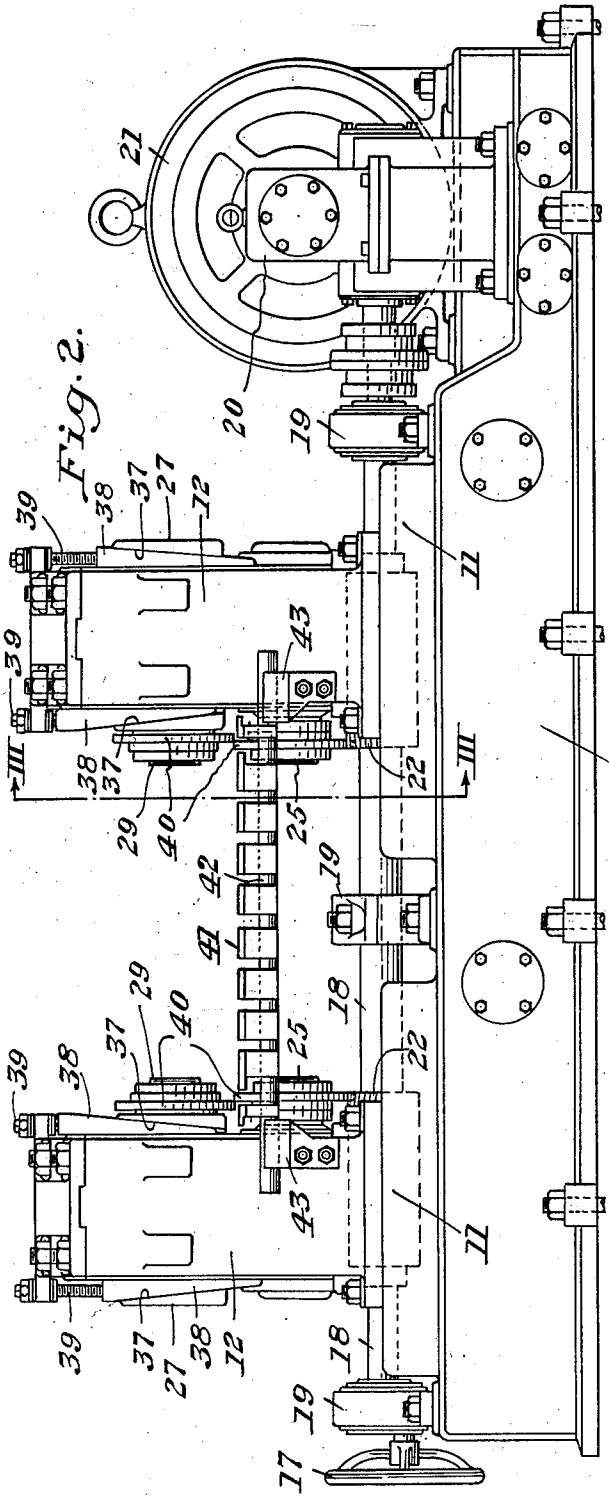

Fig. 2.

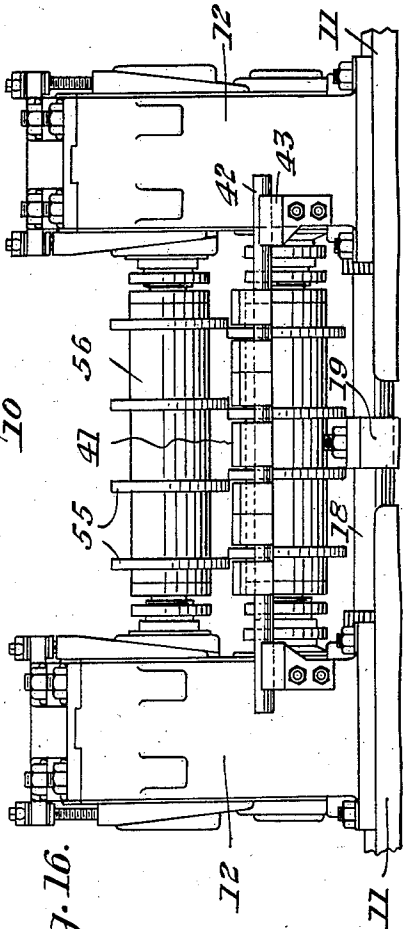

Fig. 16.

INVENTOR

Archibald D. Evans

by his attorneys

Byrnes, Stebbins,

Parmelee & Blenko

Dec. 25, 1934. A. D. EVANS 1,985,856

SHEARS

Filed Dec. 15, 1933 5 Sheets-Sheet 3

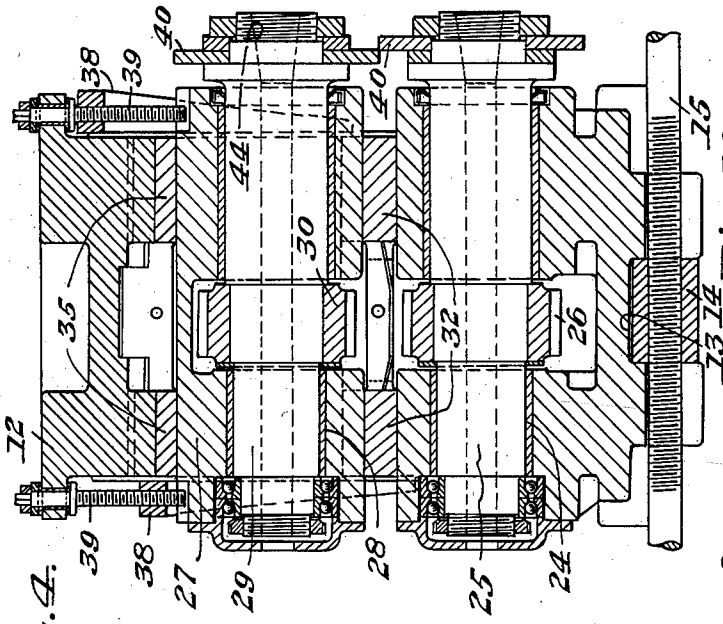

Fig. 4.

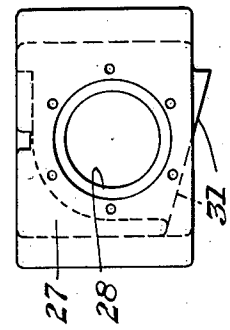

Fig. 10.

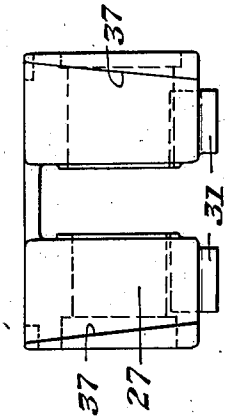

Fig. 9.

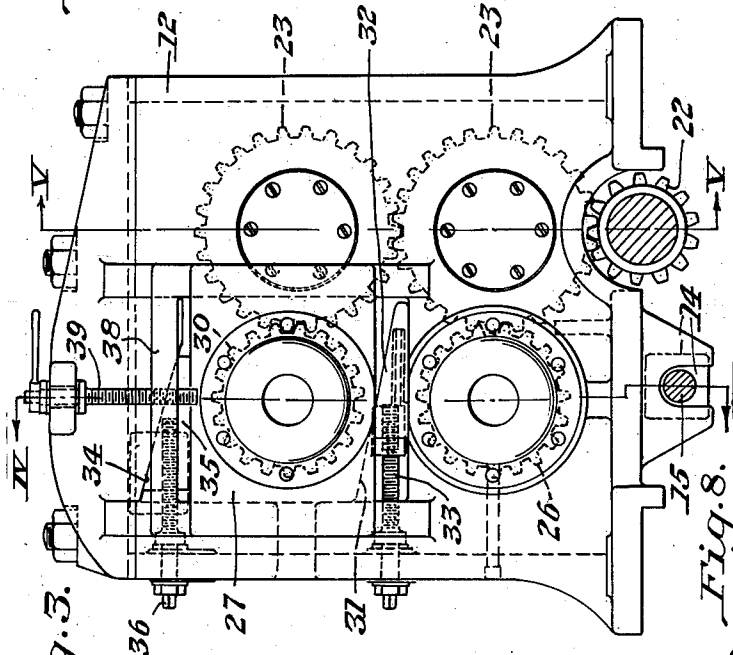

Fig. 3.

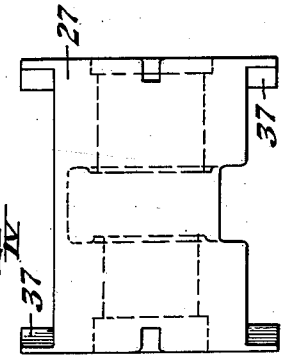

Fig. 8.

INVENTOR

Archibald D. Evans

by his attorneys

Byrnes, Stebbins, Parmelee & Blenko

Dec. 25, 1934. A. D. EVANS 1,985,856

SHEARS

Filed Dec. 15, 1933 5 Sheets-Sheet 4

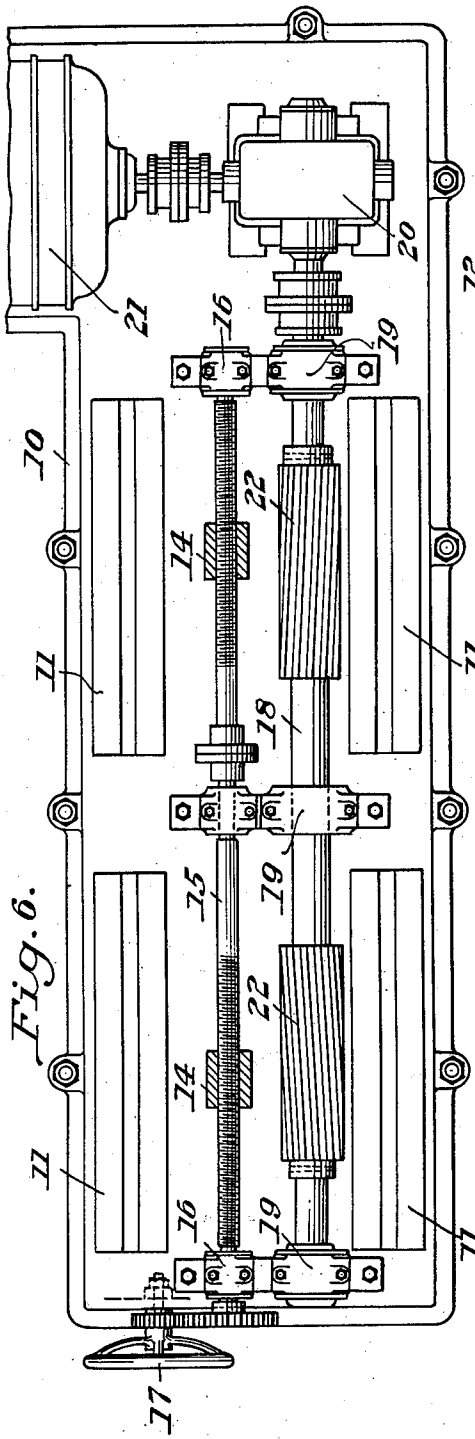

Fig. 6.

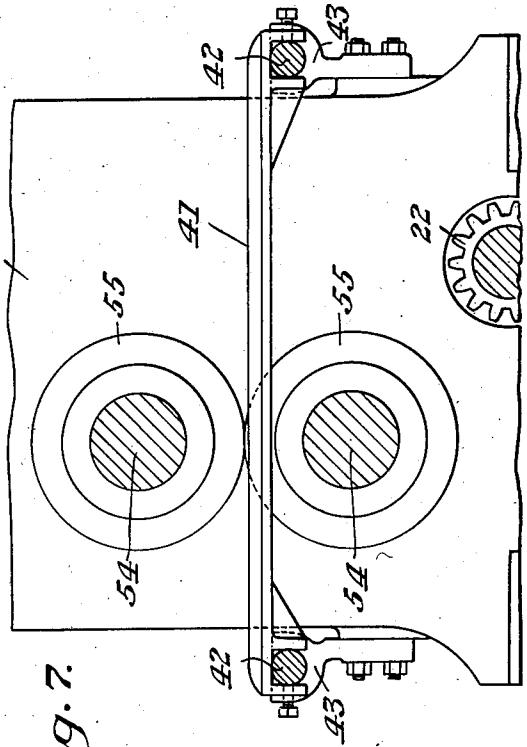

Fig. 7.

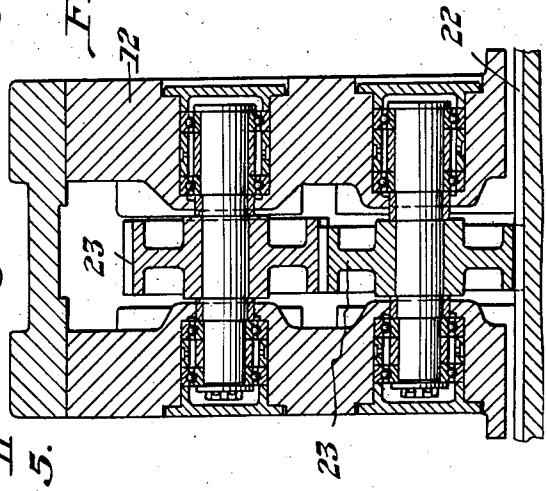

Fig. 5.

INVENTOR

Archibald D. Evans

by his attorneys

Byrnes, Stebbins, Parmelee & Blenko

Dec. 25, 1934. A. D. EVANS 1,985,856

SHEARS

Filed Dec. 15, 1933 5 Sheets-Sheet 5

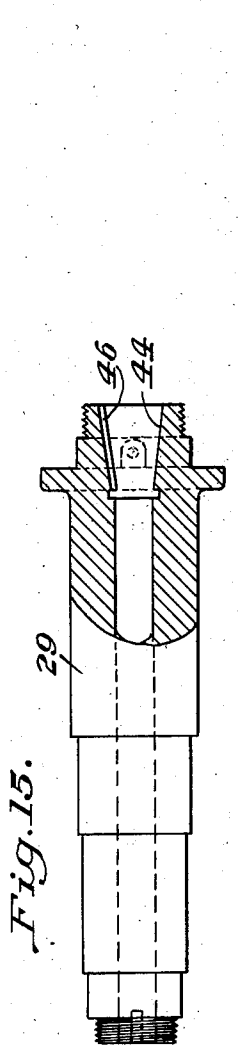

Fig. 15.

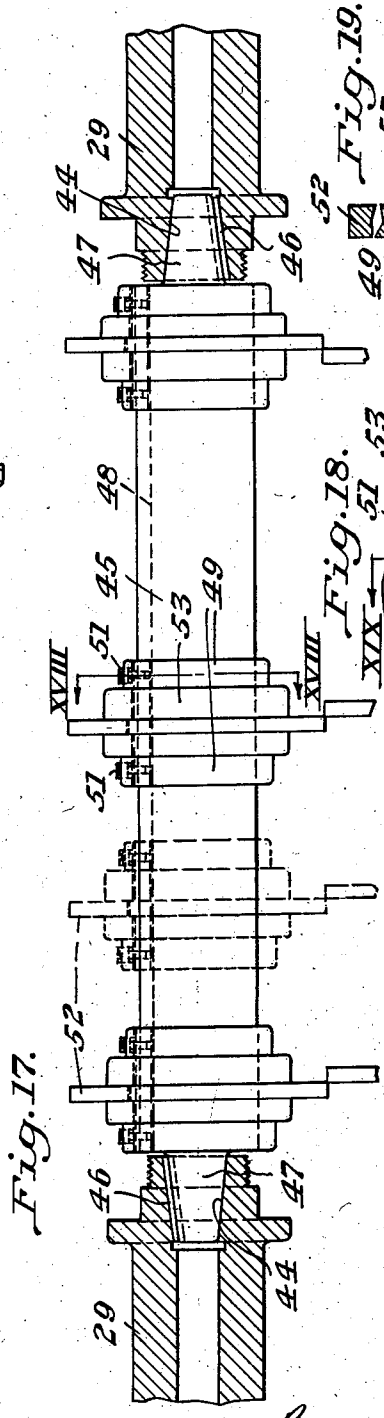

Fig. 17.

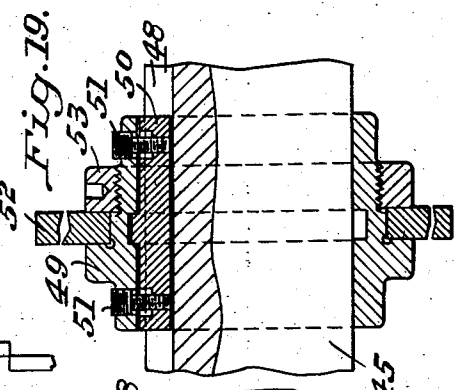

Fig. 19.

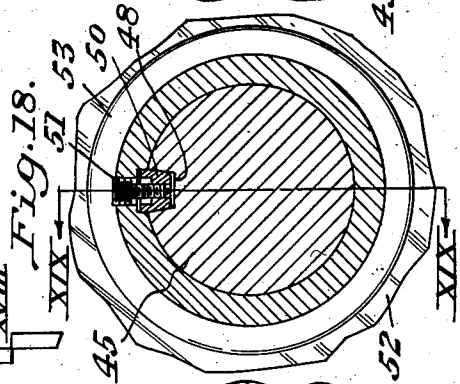

Fig. 18.

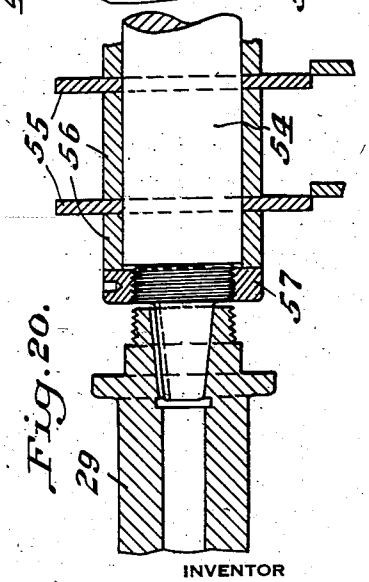

Fig. 20.

INVENTOR

Archibald D. Evans

by his attorneys

Byrnes, Stebbins, Parmelee & Blenko

Patented Dec. 25, 1934

1,985,856

UNITED STATES PATENT OFFICE

1,985,856

SHEARS

Archibald D. Evans, Warren, Ohio, assignor to The Wean Engineering Company, Incorporated, Warren, Ohio, a corporation of Ohio

Application December 15, 1933, Serial No. 702,538

9 Claims. (Cl. 164—60)

My invention relates to shears and, in particular, to trimming and slitting shears of the disc type.

The requirements of present-day users of strip material cover a wide range of widths. This necessitates that a trimming or slitting shear be capable of easy adjustment and of such construction as to maintain its adjustment accurately, when once adjusted. The accuracy of the adjustment of the cutting discs is particularly important because, in shearing thin material, a burr will be formed at the edge of the sheared strip unless the cutters are accurately adjusted to within fractional thousandths of an inch. The difficulty of accurately adjusting shearing cutters has been particularly noticeable in the practice of so-called "gang slitting". While it is fairly simple to clamp cutting discs on a rotating mandrel with accurately ground spacers therebetween, so that the distance between cutters is known accurately, the adjustment of one rotating mandrel relative to another involves some difficulty, which is further complicated by the necessity of accurately positioning the mandrel relative to its driving spindle. It is further necessary to provide for adjustability of the driving spindle to accommodate the shear to different widths of the material. All these difficulties are increased by the fact that the cutters themselves are reground frequently, with the result that their thickness and diameter are slightly changed. Shears for cutting strip as constructed heretofore have been designed either for edge trimming or for gang slitting. This has necessitated the use of two separate machines to accommodate the product to the wide range of widths demanded by the trade.

I have invented an apparatus of the class described which satisfactorily overcomes the objections to such devices as known heretofore. In accordance with my invention, I provide a base having housings adjustably mounted thereon. Each housing has a fixed bearing for a lower spindle and an adjustable bearing for an upper spindle. The adjustable bearings are provided with actuating wedges which make it possible to adjust the bearings accurately and quickly. The driving spindles are geared to a cross shaft and are of such character that cutting discs may be mounted directly thereon for edge trimming, as well as to receive cutter-supporting mandrels for gang slitting. I am thus able to obtain all desired widths within a wide range by the use of a single machine.

For a complete understanding of the invention, reference is made to the accompanying drawings illustrating a present preferred embodiment with certain modifications. In the drawings:

Figure 1 is a plan view;

Figure 2 is a side elevation;

Figure 3 is an end view of one of the adjustable housings;

Figure 4 is a sectional view along the line IV—IV of Figure 3;

Figure 5 is a sectional view along the line V—V of Figure 3;

Figure 6 is a plan view of the apparatus of Figure 1 with the housings and supporting table therebetween removed, showing the means for adjusting the housings and driving the spindles;

Figure 7 is a somewhat diagrammatic sectional view similar to Figure 3, showing the supporting table;

Figure 8 is a plan view of the adjustable bearing chuck for one of the driving spindles;

Figure 9 is a side elevation thereof;

Figure 10 is an end view thereof;

Figure 11 is an elevation of the wedge for effecting horizontal adjustment of the bearing chuck;

Figure 12 is a side view thereof;

Figure 13 is a side view of the wedge for effecting vertical adjustment of the bearing chuck;

Figure 14 is a plan view thereof;

Figure 15 is a detail view, partly in section, of one of the driving spindles;

Figure 16 is a view similar to Figure 2 showing the shear with mandrels in place for gang slitting;

Figure 17 is a detail view showing the positioning of the mandrel in the driving spindles and the mounting of the cutters on the mandrel;

Figure 18 is a sectional view along the line XVIII—XVIII of Figure 17;

Figure 19 is a sectional view along the line XIX—XIX of Figure 18; and

Figure 20 is a sectional view showing a modified form of mounting for the cutters carried by the mandrel.

Referring now in detail to the drawings, the apparatus comprises a base 10 having ways 11 extending transversely thereof. Housings 12 are adjustable along the ways 11. Each housing has a bottom recess 13 for a nut 14 carried on an adjusting screw shaft 15. The shaft 15 is journaled in suitable bearings 16 on the base 10 and is provided with a hand wheel 17 to facilitate transverse adjustment of the housings 12. It will be noted in Figure 6 that the ends of the screw shaft 15 are oppositely threaded so that

the housings may be simultaneously moved in opposite directions.

A drive shaft 18 is journaled in bearings 19 on the base 10 and is coupled to a speed reducer 20 driven by a motor 21. The shaft 18 is provided with elongated driving pinions 22.

Each of the housings 12 is provided with back gears 23 journaled therein in suitable bearings, as shown in Figure 5. The gears 23 are in mesh with each other and the lower gear also meshes with one of the elongated pinions 22.

In each of the housings 12, a bearing 24 is provided for a bottom driving spindle 25. A gear 26 on the spindle 25 meshes with the bottom back gear 23. Each of the housings 12 is also provided with an adjustable chuck 27 having a bearing 28 therein for a driving spindle 29. The spindle 29 has a gear 30 thereon adapted to mesh with the top back gear 23.

Each chuck 27 has inclined surfaces 31 formed at the bottom thereof. A wedging yoke 32 somewhat similar to that shown in Figures 13 and 14, rests on the top of the bearing 24 for the bottom spindle 25 and supports the chuck at the proper elevation. An adjusting screw 33 traverses the yoke 32. Inclined surfaces 34 formed on the top of the housings, are engaged by wedging yokes 35 shown in detail in Figures 13 and 14. Adjusting screws 36 traverse the yokes 35.

Inclined surfaces 37 are formed on opposite sides of the chucks 27 at each end thereof and the wedging yokes 38, as shown in detail in Figures 11 and 12, cooperate with these surfaces and the sides of the housings to position the chucks 27 laterally. Adjusting screws 39 traverse the yokes 38. It will be apparent from the foregoing that the chucks 27 may be adjusted by the several wedging yokes, both horizontally and vertically.

As shown in Figure 4, the driving spindles 25 and 29 are provided with cutting discs 40 for cooperation in the side trimming of strip material. Material fed to the shears is supported during the performance of the shearing on a table 41 consisting of a plurality of bars clamped to cross rods 42 supported in brackets 43 on the housings 12. It will be understood that the rods 42 carry the entire table and that they are, in turn, carried by the housings 12, on the brackets 43. As the housings 12 move, the rods 42 slide through brackets 43. The housings 12 are first adjusted, of course, so that the bottom cutters 40 are properly spaced. The upper cutters may then be adjusted by manipulation of the wedge-adjusting screws. It will be understood that in effecting lateral or vertical adjustments of the chucks 27, one of the wedging yokes must be retracted as the other is advanced. Because of the considerable length of the pinions 22, a wide range of spacings between the housings is permitted without affecting the drive for the cutter spindles.

It will be obvious from Figure 7 that the bars composing the table 41 may be adjusted on the cross bars 42 which support them by loosening the clamping screws. This is of particular importance when changing the machine from the set-up for edge trimming only, shown in Figure 2, to the set-up for gang slitting, shown in Figure 16. It will be observed that in the latter figure, the bars composing the table 41 have been moved from the positions in which they are shown in Figure 2, to permit the cutters on the lower mandrel to project upwardly therebetween.

In order to adapt the shear of my invention to slitting as well as edge trimming, the spindles are provided with a tapered bore 44 for receiving similarly shaped ends of mandrels 45 provided with a plurality of cutter discs for gang slitting. The spindles have keyways 46. Similar keyways in the tapering ends 47 of the mandrels permit the latter to be securely locked to the spindles. Figure 16 shows the general appearance of the shear when arranged for gang slitting. Each of the mandrels has an axial groove 48 therein with inclined side walls. Cutter sleeves 49 may be attached to the mandrels in any desired position along the length thereof by means of wedges 50 cooperating with the tapering side walls of the grooves 48. Locking screws 51 having portions thereof provided with threads of different pitch cooperate with the sleeves 49 and the wedges 50 to force the latter into the groove 48 as the screws are turned. As shown in Figure 19, a cutter 52 is secured to the sleeve 49 by a nut 53.

Instead of the cutter mounting shown in Figures 17 through 19, a solid mandrel 54 may be positioned in the spindles 29 and provided with cutters 55 separated by spacers 56 clamped between nuts 57 threaded on the mandrel.

To set up the shear for gang slitting, of course, the cutters 52 or 55 are properly positioned on their mandrels. Both top and bottom mandrels are then seated in the spindles 29 and 25 respectively by moving the housings 12 apart and then together with the mandrels in alinement with the spindles. If the cutter mounting of Figure 19 is employed, the upper mandrel may be mounted in the chucks 29, the same as the lower mandrel and, after any adjustments of the yokes 27 which may be necessary, the cutters 52 may be secured to the mandrel at the proper points. If the cutter mounting of Figure 20 is used, the spacing between cutters will be identical on both mandrels but it may be necessary to adjust the upper mandrel vertically and horizontally to bring the cutters thereof into proper relation with those of the lower mandrel and to insure the proper engagement between the spindles 29 and the upper mandrel. Such adjustment, of course, can be made by means of the wedging yokes and their adjusting screws which effect the necessary horizontal or vertical shifting of the bearing chucks 27. It will be understood that the adjustment of the chucks 27 which it is usually necessary to make, will be very slight and not sufficient to affect the meshing of the top back gears 23 with the gears 30.

It will be apparent from the foregoing description that the invention is characterized by numerous advantageous features. In the first place, the apparatus provides for side trimming only, or for gang slitting, and the setting of the machine may be readily changed to adapt it to one class of service or the other, as desired. In the second place, the bearing chucks for the top cutter spindles are adjustable horizontally and vertically to permit accurate positioning of the cutters on the upper spindles relative to those on the lower spindles. This adjustability is of particular advantage when the machine is used for gang slitting and the top mandrel must be adjusted as a unit to bring the cutters thereof into proper relation with those of the bottom mandrel. While the cutter mounting shown in Figures 17 through 19 is of particular advantage in itself since it permits the adjustment of each cutter individually without regard to the others and without necessitating the spacing sleeves

usually employed, any conventional cutter mounting can be used without departing from the advantages of this invention. The spindle housings themselves, furthermore, may be quickly adjusted toward and from each other without interfering with the driving connection between the main shaft and the spindles. The adjustability of the bearing chucks for the top spindles makes it possible to position the cutters properly regardless of reductions in their thickness and diameter resulting from periodic grinding. The same spindles, furthermore, are employed whether side trimming is being done or whether the mandrels are installed in the spindles for gang slitting.

Although I have illustrated and described herein but one specific embodiment of the invention with a modification of one feature, it will be apparent that numerous changes in the structure of the invention disclosed herein may be made without departing from the spirit thereof or the scope of the appended claims.

I claim:

1. An apparatus for continuous shearing comprising a housing, a cutter spindle journaled therein, a bearing chuck disposed in said housing and movable horizontally and vertically therein, a second cutter spindle journaled in said chuck, and means including overhanging cam surfaces on the chucks and cooperating wedges for adjusting the chuck vertically and horizontally.

2. In an apparatus for continuous shearing, a housing, a bearing chuck movable therein, a cutter spindle journaled in said chuck, said chuck having inclined surfaces extending at a small angle to the vertical and horizontal, and wedges engaging said surfaces and said housing for adjusting the chuck vertically and horizontally therein.

3. A spindle for a continuous shearing apparatus including an annular flange adjacent one end providing a seating shoulder for a disc cutter, said flanged end of the spindle also having a tapered bore adapted to receive the tapering end of a cutter mandrel for driving engagement therewith.

4. Apparatus for shearing comprising a base, a pair of housings at least one of which is movable along the base, a pair of spindles journaled in each housing, means on each spindle for securing a cutting disc thereto, each of said spindles being further adapted to engage the end of a cutter mandrel in supporting and driving relation therewith.

5. In a shear, a pair of spaced housings, a spindle journaled in one of said housings, a drive for said spindle, means on said spindle for securing a cutting disc thereto, said spindle being adapted to engage one end of a cutter mandrel, the other end of which is journaled in the other of said housings, in driving relation therewith.

6. Apparatus for continuous shearing comprising a base, a pair of housings, one of which, at least, is slidable along said base, and spindles journaled in said housing, said spindles being adapted for mounting of a cutting disc thereon and to receive disc-carrying mandrels in supporting and driving relation.

7. Apparatus for continuous shearing comprising a base, a pair of housings, at least one of said housings being slidable along the base, each of said housings having cooperating cutting discs rotatably mounted thereon, and a work-supporting table between the housings slidably supported thereon.

8. Apparatus for continuous shearing comprising a base, a pair of housings, at least one of said housings being slidable along the base, cooperating cutting discs rotatably mounted in both said housings, a power shaft journaled in said base, elongated pinions on said shaft, and gears journaled in said housings effective to drive said discs, at least one of the gears in each housing slidably meshing with one of said pinions.

9. In an apparatus of the character described, a housing, cutter spindles journaled in said housing, gears on said spindles, a driving gear meshing with each of said spindle gears, said driving gears being in mesh, a power shaft extending transversely of the housing, and a pinion thereon in mesh with one of said driving gears, said pinion having a greater axial length than the driving gear meshing therewith, and said housing being movable axially of said power shaft.

ARCHIBALD D. EVANS.