Sept. 6, 1955 G. J. MOLETZ, JR., ET AL 2,717,107

GUN FOR VISCOUS MATERIAL

Filed Oct. 29, 1954

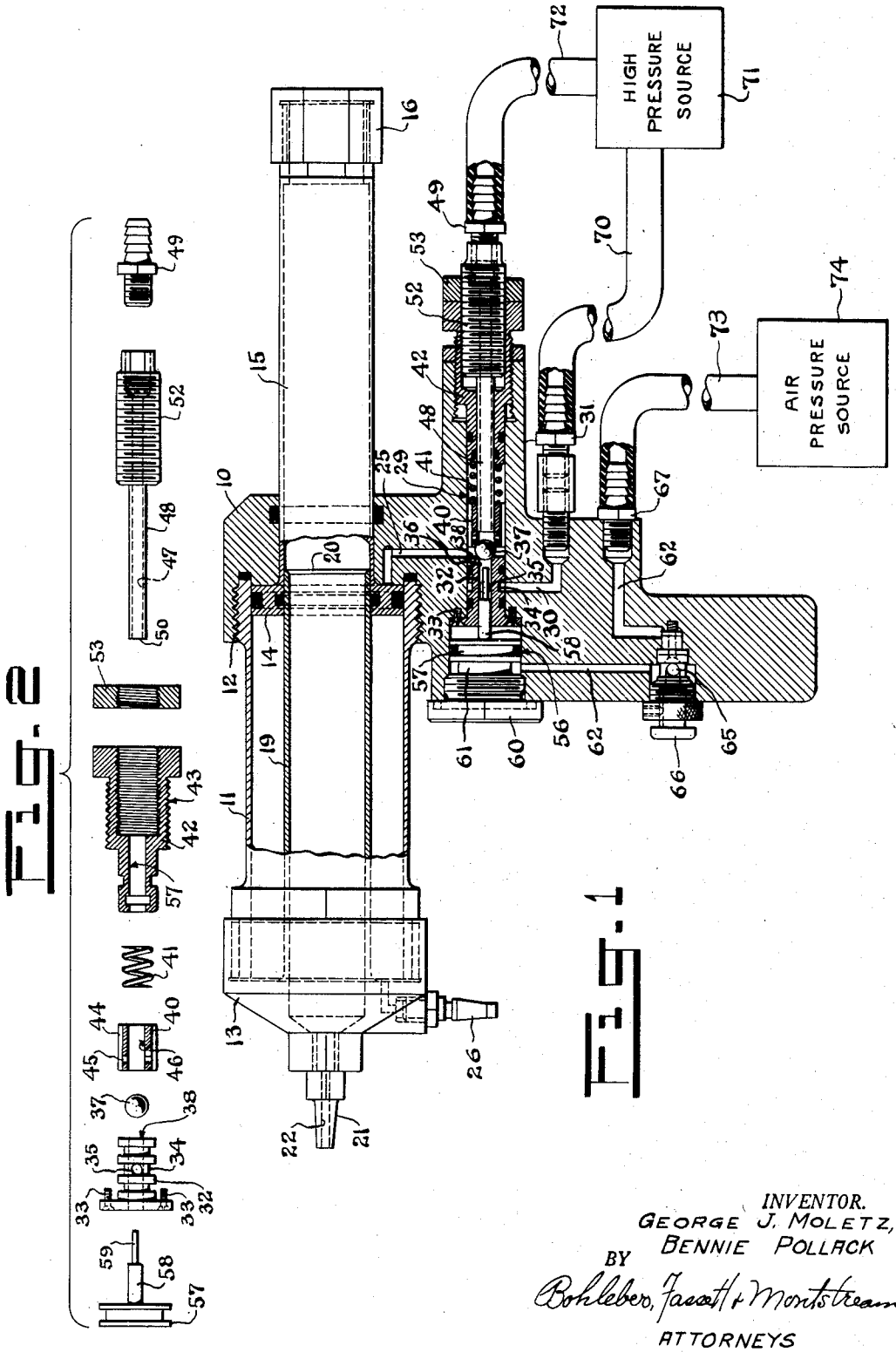

FIG. 1

FIG. 2

INVENTOR.
GEORGE J. MOLETZ, JR.
BENNIE POLLACK
BY
Bohlebor, Jasatt & Montstream
ATTORNEYS

United States Patent Office 2,717,107
Patented Sept. 6, 1955

2,717,107

GUN FOR VISCOUS MATERIAL

George J. Moletz, Jr., Jamaica, and Bennie Pollack, Brooklyn, N. Y.

Application October 29, 1954, Serial No. 465,652

7 Claims. (Cl. 222—334)

The invention relates to a gun for forcing a very viscous material under considerable pressure into a desired cavity, crevice or the like. The gun is designed particularly for driving a sealing material having a viscosity of 1.72 into sealing cavities of substantial length although the gun is applicable for forcing other materials of high viscosity into a desired cavity. The invention also includes the combination of the gun and two pressure sources in that the gun utilizes very high fluid pressure, preferably hydraulic, to force the material out of the gun and a lesser air pressure to operate a high pressure valve means which controls the feeding of high pressure fluid to the power means for the gun. This valve means also exhausts the fluid therefrom.

It is an object of the invention to construct a gun which provides sufficient pressure to force a very viscous material out of the gun and into a cavity or cavities to be filled with the material.

Another object is to construct a gun for highly viscous material using high pressure fluid as the driving fluid in which a high pressure valve is operated by an air cylinder and piston to easily overcome the high pressure on the high pressure valve means.

Another object of the invention is to construct a gun for highly viscous material which can be easily and quickly loaded with the material.

Another object is to construct a high pressure gun for projecting highly viscous material which gun is light in weight so that it is easily portable even though equipped with power means.

Other objects of the invention will be more apparent from the following description when taken in connection with the accompanying drawing illustrating a preferred embodiment of the invention in which:

Figure 1 is a vertical section through the gun, the valves controlling the same, and showing diagrammatically two power sources; and

Figure 2 is an expanded view of the high pressure valve parts.

The gun includes a frame **10** of light weight metal upon which is mounted the plunger means for holding and expelling the viscous material, the power means therefor and the valve mechanisms for controlling the power means. The power means includes a power cylinder **11** one end of which is secured to the frame by being received in a screw threaded recess **12** therein. The other end of the power cylinder is closed by a cylinder head **13** preferably threaded on the cylinder. A ring piston **14** is freely movable within the cylinder and it carries a tubular piston rod **15** which projects through the frame so that its other end is clear of other structure. The end of the hollow piston rod is closed by a removable cap which may be threaded on the end of the rod.

Means are provided to store a quantity of viscous material from which it is expelled by plunger means. Preferably the storage means or chamber is located centrally of the power means in order to conserve space and weight. The storage means particularly shown is a tubular sleeve

19 carried by the cylinder head **13** which sleeve passes through the ring piston **14** and into the end of the hollow piston rod. The inner diameter of the hollow piston rod and the outer diameter of the sleeve are of such dimensions as to provide a sliding fit therebetween but will not pass the viscous material. Preferably the inner end of the sleeve has a bevel **20** to present a thin edge to the viscous material as it is forced from the piston rod into the tubular chamber or sleeve and then out of a discharge nozzle **21** carried by the cylinder head and having a discharge passage of a suitable size. The viscous sealing material is loaded into the sleeve by removing the cap **16** and projecting the material through the tubular or hollow piston rod which is also loaded with material. This end of the sleeve is open into the piston rod for free passage of the material thereinto. The end of the piston rod is closed by attaching the cap **16** on the piston rod. The viscous material in the sleeve **19** is forced out of the discharge nozzle into a cavity by the movement of the piston rod over the sleeve or to the left in the drawing. This movement reduces the interior volume and forces the sealing material out of the gun. The hollow piston rod with its closing cap provides plunger means for forcing the viscous sealing material out of the storage chamber formed by the sleeve **19**.

The frame **10** is provided with a passage **25** for feeding high pressure operating fluid to one end of the cylinder **11** thereby driving the piston through the cylinder **11** and moving the piston rod **15** therewith. The connection shown is to the frame end of the cylinder so that the piston is driven away therefrom or to the left as shown in Figure 1. The piston may be returned to initial position by pulling it to the right by exerting a pull on the projecting piston rod **15**; however, it is preferable and easier to use air pressure to return the piston; hence an air inlet nozzle **26** is connected to the other end of the power cylinder so that air pressure may be applied to the piston and return it towards the frame or to the right in the cylinder.

A high pressure valve means controls the feeding of high pressure fluid to the cylinder and the exhaust of fluid therefrom. A pressure of about 1000 pounds per square inch is used and the gun has operated satisfactorily up to pressures of 3000 pounds per square inch. The valve is located in a valve cavity **29** extending through the frame and spaced from the power means so that the valve can be taken apart and serviced or repaired without disturbing or taking apart any of the power mechanism. An inlet passage **30** leads from a connecting nipple **31** to the valve cavity. A valve seat member **32** is retained in the cavity by means of screws **33** and overlaps the inlet input passage. The pressure fluid passes to a circumferential groove **34** in the valve seat member and through radial holes **35** extending therefrom to a central bore **36** extending through the member. The valve preferably is a ball **37** which seats when closed against the valve seat **38** formed at or by the edge of the central bore at the end of the valve seat member. Upon opening of the ball valve, the high pressure fluid passes around the valve or ball and through the passage **25** to the power means.

The ball valve is pressed against the valve seat or held in closed position by valve closing means including a collar **40** which is slidably mounted in the valve cavity **29** and which is propelled to closing position to the left by a spring **41** engaging the end thereof. The other end of the spring is engaged by an adjusting member **42** having threads **43** thereupon for adjusting its position and the pressure or compression of the spring which holds the valve closed. Since the spring must oppose the high fluid pressure acting on the ball to open the same, a strong or heavy spring must be used to overcome the fluid pressure. When the ball valve is seated on the valve seat, the fluid within the valve cavity **29**, the passage **25** and the power

cylinder 11 escapes or exhausts through a portion of the longitudinal grooves 44 in the collar 40, radial holes 45 extending to a center bore 46, through this bore and a central bore 47 in an exhaust or outlet valve seat member 48 and out the outlet nipple 49. The exhaust valve seat member 48 carries a valve seat 50 at the end thereof which may be the edge of the central bore 47. This valve seat member is a tube which extends through a central bore 51 in the spring adjusting member 42 and the end reaches adjacent to but spaced from the ball valve. The outlet valve seat member preferably carries screw threads 52 for adjusting its position relatively to the ball valve or the inlet valve seat and it may be locked in adjusted position by a lock nut 53. The grooves 44 preferably extend the full length of the collar to connect with the chamber for the spring so that it will not become bound by fluid which might be trapped therein.

Power means preferably is used to operate the high pressure valve. The valve particularly illustrated being closed by a spring, this valve operating power means is used to overcome the resistance offered by the spring means and open the valve. The power means includes a cylinder 56 at one end of the valve cavity in which a piston 57 is slidable. The piston carries a valve opening pin 58 which passes through the center bore in the valve seat member 32. The end 59 of this pin has a reduced diameter beginning approximately at the radial holes 35 in the seat member to provide a passage for the high pressure fluid thereover towards the valve. The pin is long enough to engage and unseat the ball valve from the valve seat when it is projected thereagainst or to the right. The end of the cylinder is closed by a cylinder head or screw 60 which may have a spacer pad 61 to keep the piston 57 from closing or covering an air inlet passage 62 into the power side of the cylinder and piston.

When the valve operating pin unseats the valve, it also presses the slidable collar 40 to a position where the radial holes 45 are blocked by the outlet valve seat member 48. In addition the valve is pressed against the outlet valve seat 50 to close the central bore 47 in the seat member 48. A double outlet valve is provided therefore to assure closing of the outlet connection when there is pressure upon the power means.

The power means for operating the high pressure valve is operated by compressed air of about ninety pounds pressure. The air is fed to the cylinder in which is provided a manually operable air valve 65 having a valve opening button 66 which controls the flow and exhaust of air into the cylinder. Upon depressing the push button the valve 65 is opened to feed compressed air from the inlet connection 67 through the valve to the cylinder which air propels the piston and the valve opening pin 59 to the right and pushes the ball valve 37 off of its seat to open the high pressure valve. The air valve 65 may be any suitable manually operated air valve.

The high pressure fluid is fed to the gun through a flexible hose 70 from a suitable source of high pressure 71. The outlet connection 49 preferably is connected by a flexible hose 72 to the high pressure source or to a drain so that the fluid or water is carried away from the work. The air inlet connection 67 is preferably connected by a flexible tube or hose 73 to a source 74 of air at a suitable pressure. The air from the cylinder 56 is exhausted through the valve 65 to atmosphere when the operating button 66 is released.

The high pressure fluid may be air or fluid although the latter is preferred because air at the high pressures used has a tremendous power of expansion in case of a leak or hose failure. Water is preferred as an hydraulic pressure fluid since it is inexpensive and available anywhere. Packing or pressure seals are provided between parts where needed and are indicated in the drawings.

This invention is presented to fill a need for improvements in a gun for viscous material. It is understood that various modifications in structure, as well as changes in mode of operation, assembly, and manner of use, may and often do occur to those skilled in the art, especially after benefitting from the teachings of an invention. Hence, it will be understood that this disclosure is illustrative of preferred means of embodying the invention in useful form by explaining the construction, operation and advantages thereof.

What is claimed is:

1. A gun for projecting viscous material comprising a frame; power means carried by the frame including a power cylinder connected at one end to the frame, a ring piston movable within the power cylinder, a tubular piston rod carried by the piston at one end of the rod and projecting through the frame and the other end being closed, and a cylinder head closing the other end of the power cylinder; a tubular chamber carried by the cylinder head and projecting into the ring piston and piston rod for receiving the material and having a discharge opening at the cylinder head end thereof, valve means carried by the frame and connected to one end of the power cylinder to feed and exhaust pressure fluid therein including spring means to close the same, power means connected to the valve means to operate the same against the pressure of the spring means including a cylinder and a piston within the cylinder, and an air pressure valve connected with one end of the cylinder of the valve power means to operate the valve power means and its valve means.

2. A gun as in claim 1 including an air connection with the other end of the power cylinder.

3. A gun for projecting viscous material comprising a frame, means carried by the frame having a chamber for receiving the material and having a discharge opening at one end of the chamber, plunger means movable relatively to the chamber to force the material out of the chamber, power means carried by the frame and connected with the plunger means for moving the same including a power cylinder and a piston movable within the power cylinder; power valve means connected to one end of the power cylinder to feed and exhaust pressure fluid thereto including a valve, a slidable collar engaging the valve and a spring means engaging the collar to close the valve; valve power means connected to the valve to open the same against the pressure of the spring means including a cylinder and a piston within the cylinder, and an air pressure valve connected with one end of the cylinder of the valve power means to operate the power means for the valve and open the power valve means.

4. A gun for projecting viscous material comprising a frame, means carried by the frame having a chamber for receiving the material and having a discharge opening at one end of the chamber, plunger means movable relatively to the chamber to force the material out of the chamber, power means carried by the frame and connected with the plunger means for moving the same including a power cylinder and a piston movable within the power cylinder; power valve means connected to one end of the power cylinder to feed and exhaust pressure fluid thereto including a valve, a slidable collar engaging the valve, and having a central bore, spring means engaging the collar to close the valve, an outlet valve seat member extending into the bore of the collar and having an outlet valve seat adjacent to the valve and engaged by the valve when in open position, and an outlet in the outlet valve seat member; valve power means connected to the valve means to open the same against the pressure of the spring means including a cylinder and a piston within the cylinder, and an air pressure valve connected with one end of the cylinder of the valve power means to operate the power means for the valve and the power valve means.

5. A gun for projecting viscous material comprising a frame, means carried by the frame having a chamber for receiving the material and having a discharge opening at one end of the chamber, plunger means movable relatively to the chamber to force the material out of the chamber, power means carried by the frame and connected with

the plunger means for moving the same including a power cylinder and a piston movable within the power cylinder; power valve means connected at one end of the power cylinder to feed and exhaust pressure fluid thereto including a member having an inlet valve seat, a valve, a slidable collar engaging the valve and having a central bore, spring means engaging the collar to close the valve on the inlet valve seat, adjusting means engaging the spring means and having a central bore, a tubular outlet seat member extending through the bore of the spring adjusting means and into the bore of the collar and having an outlet valve seat adjacent to the valve and engaged by the valve when in open position, and valve power means connected to the valve means to open the same against the pressure of the spring means including a cylinder and a piston within the cylinder; and an air pressure valve connected with one end of the cylinder of the valve power means to operate the latter and the power valve means.

6. A gun as in claim 5 including means to adjust the position of the tubular outlet seat member.

7. A gun for projecting viscous material comprising a frame, means carried by the frame having a chamber for receiving the material and having a discharge opening at one end of the chamber, plunger means movable relatively to the chamber to force the material out of the chamber, power means carried by the frame and connected with the plunger means for moving the same including a power cylinder and a piston movable within the power cylinder; the frame having a valve cavity extending therethrough, power valve means within the cavity

and connected at one end of the power cylinder to feed and exhaust pressure fluid thereto including a member secured within the cavity and having a central bore and an inlet valve seat, a valve, a slidable collar engaging the valve and having a central bore, spring means engaging the collar to close the valve on the inlet valve seat, adjusting means engaging the spring means and having a central bore, a tubular outlet seat member extending through the bore of the spring adjusting means and into the bore of the collar and having an outlet valve seat adjacent to the valve and engaged by the valve when in open position, and valve power means at one end of the valve cavity including a cylinder, a piston within the cylinder, and a pin carried by the piston and projecting through the central bore of the inlet valve seat member to engage the valve means to open the same against the pressure of the spring means, and an air pressure valve connected with one end of the cylinder of the valve power means to operate the latter and the power valve means.

References Cited in the file of this patent

UNITED STATES PATENTS

1,554,348	Hawkins	Sept. 22, 1925
1,776,659	Geffon et al.	Sept. 23, 1930
2,004,664	Krannak	June 11, 1935
2,673,012	Harrington	Mar. 23, 1954

FOREIGN PATENTS

521,911	Great Britain	June 4, 1940