US00D390718S

United States Patent [19]

Howland et al.

[11] Patent Number: Des. 390,718

[45] Date of Patent: **Feb. 17, 1998

[54] **CHILDRENS TRAY TABLE**

[76] Inventors: **William Otis Howland**, 6312 Carnegie Dr., Bethesda, Md. 20817; **Lettie Catherine Howland**, 22825 Madison St., Torrance, Calif. 90505

[**] Term: **14 Years**

[21] Appl. No.: **62,651**

[22] Filed: **Nov. 21, 1996**

[51] **LOC (6) Cl.** **06-06**

[52] **U.S. Cl.** **D6/406**

[58] **Field of Search** D6/406, 420, 511, D6/419; D12/415, 416, 133, 128; D7/698, 553; 297/148; 108/43, 44; 224/924, 540, 625, 679

[56] **References Cited**

U.S. PATENT DOCUMENTS

D. 152,153	12/1948	Harvey	D6/406
D. 193,244	7/1962	Bliss	D6/406
D. 249,859	10/1978	Scholler	D6/406 X
D. 281,555	12/1985	Levy	D6/406
D. 282,218	1/1986	Catelli	D6/406 X
D. 283,777	5/1986	Morin	D7/698
D. 289,247	4/1987	Wang	D6/406 X
D. 290,316	6/1987	Chiasson	D6/406
D. 319,358	8/1991	Giugiaro	D6/406
D. 346,287	4/1994	Rosen	D6/420 X
D. 354,636	1/1995	Cable	D6/406
D. 355,786	2/1995	Wolff	D7/553 X

Primary Examiner—M. N. Pandozzi

Attorney, Agent, or Firm—Nixon & Vanderhye

[57] **CLAIM**

The ornamental design for a "children's tray table", as shown and described.

DESCRIPTION

FIG. **1** is a top, front and right side perspective view of a children's tray table according to our design;

FIG. **2** is a front elevational view thereof;

FIG. **3** is a rear elevational view thereof;

FIG. **4** is a left side elevational view thereof, the right side being a mirror image thereof;

FIG. **5** is a bottom front perspective view thereof;

FIG. **6** is a top, rear and right side perspective view thereof with the table top illustrated in an open position; and,

FIG. **7** is a top, front and right side perspective view thereof illustrating the table top in a further opened position.

1 Claim, 5 Drawing Sheets

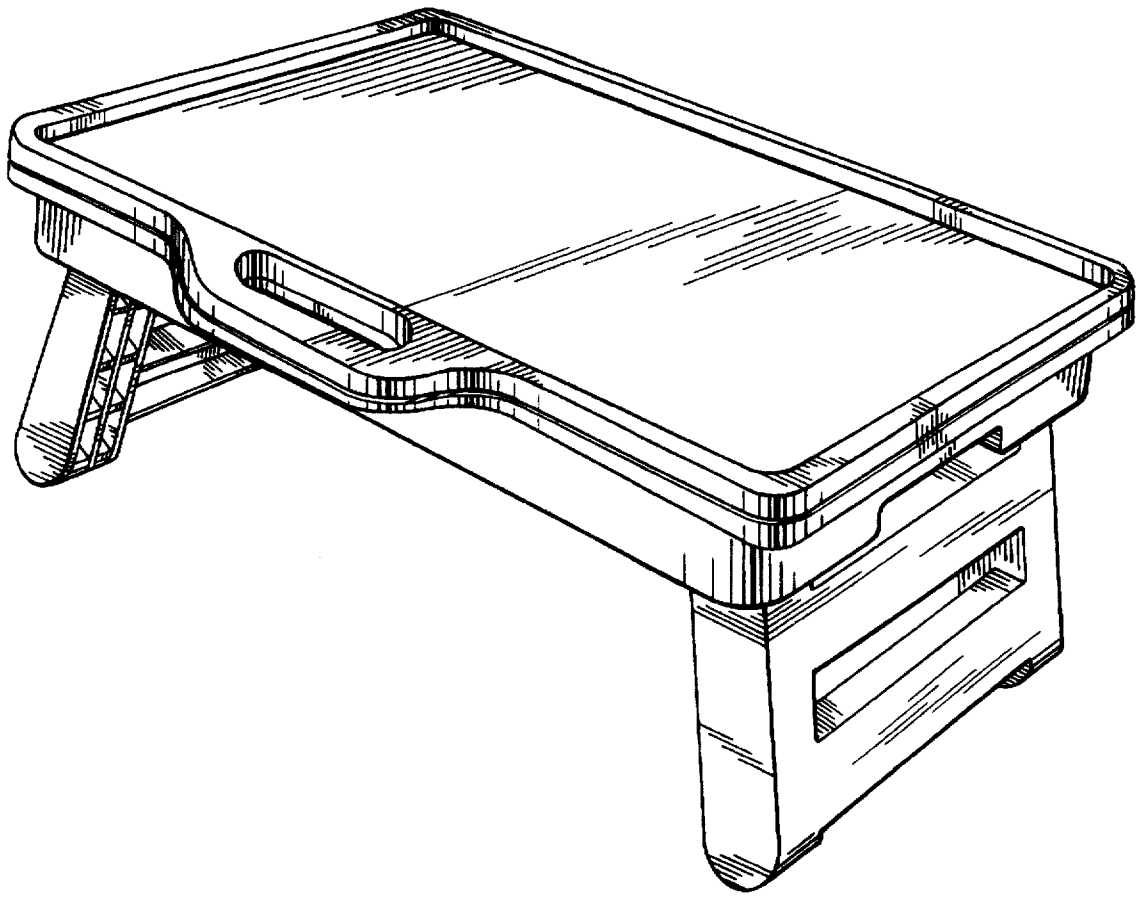

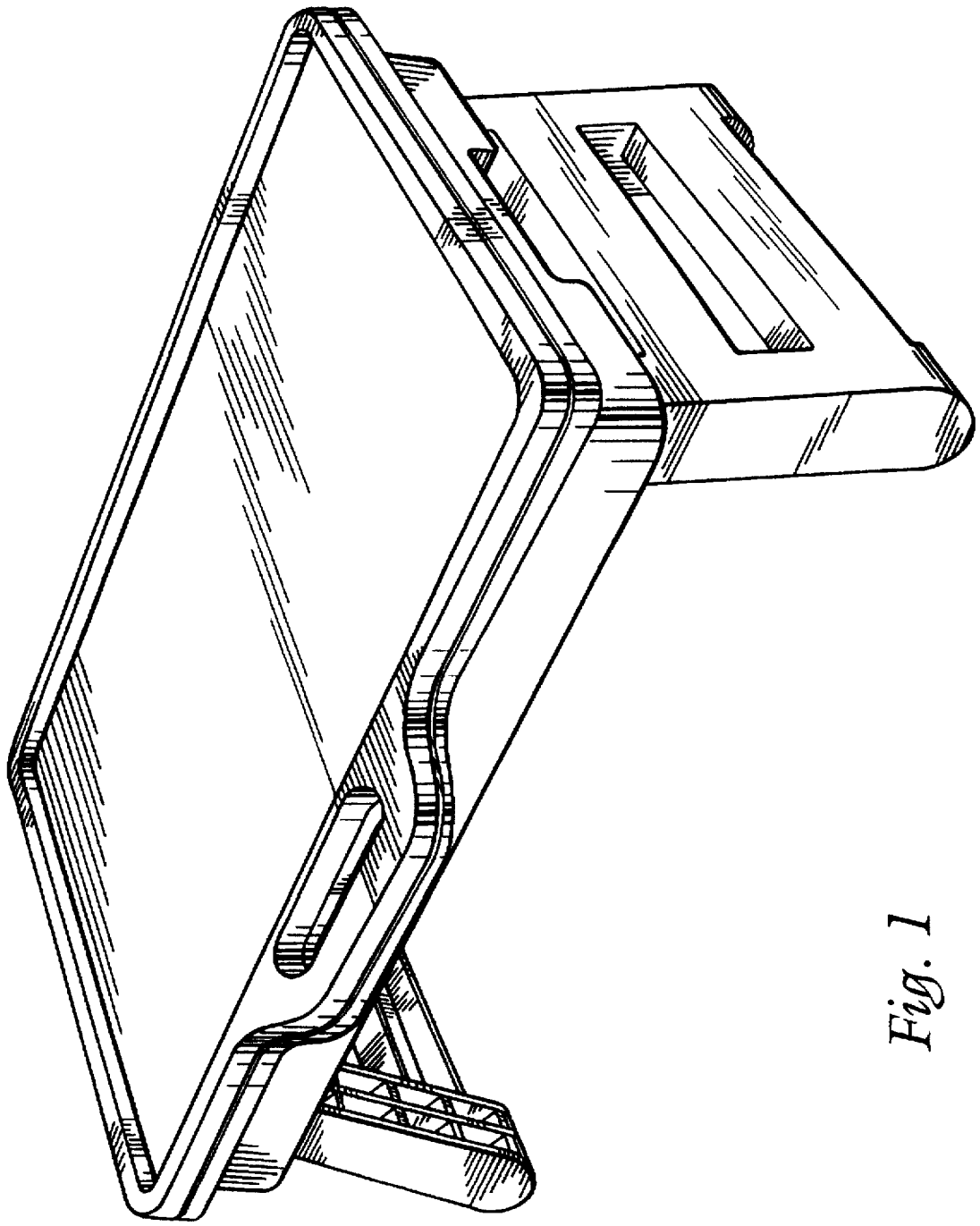

Fig. 1

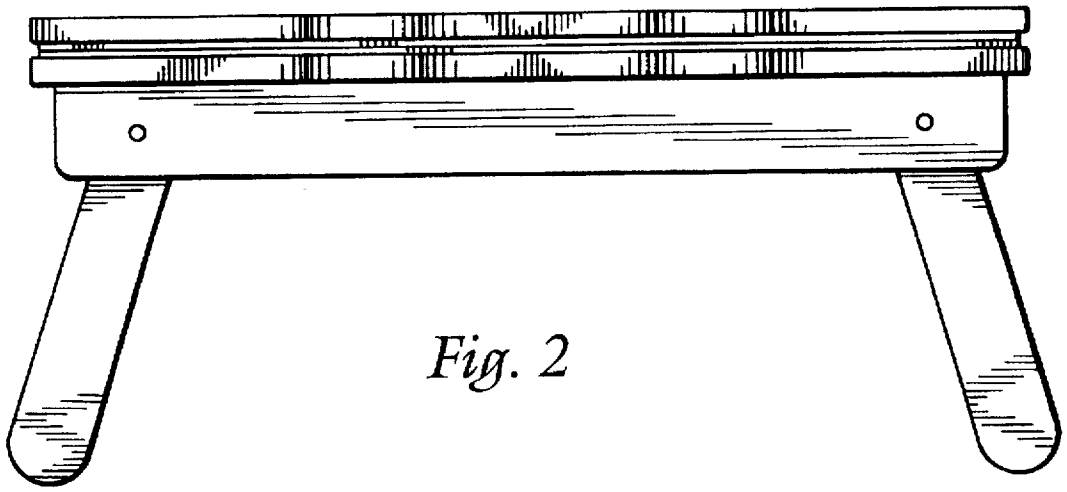

Fig. 2

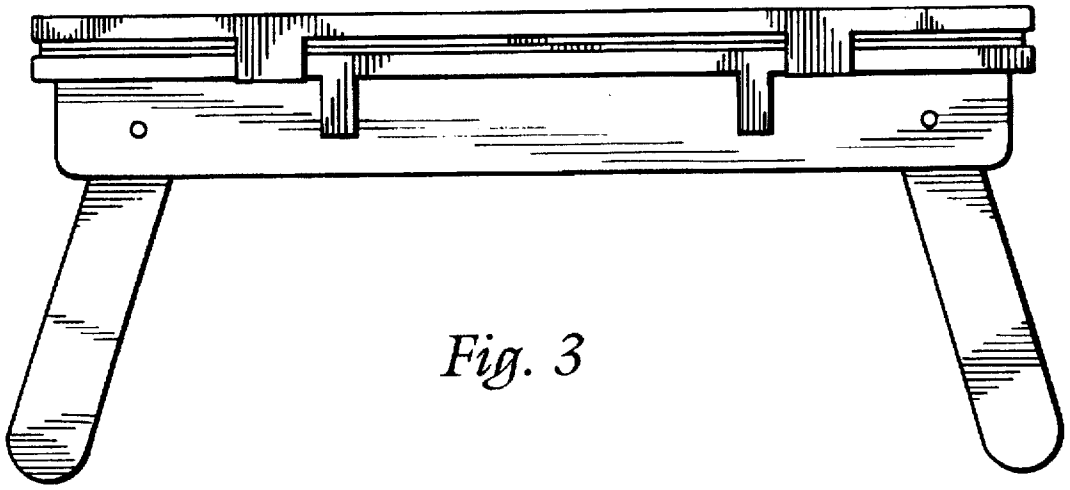

Fig. 3

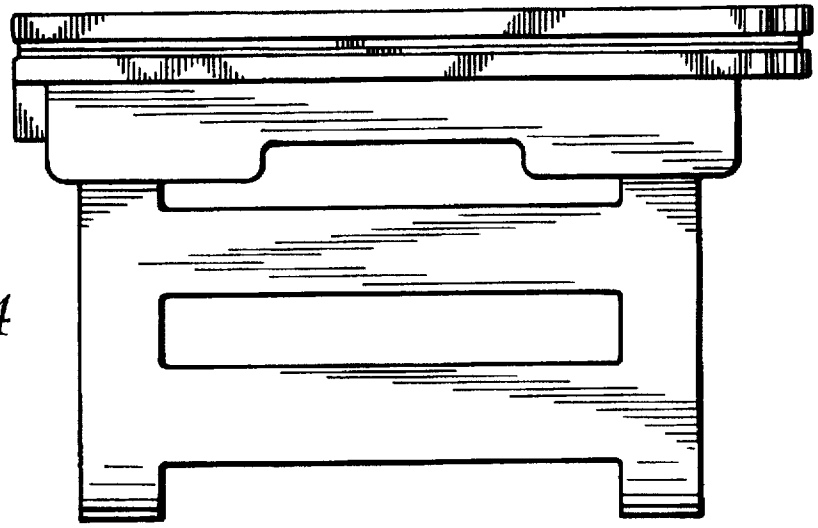

Fig. 4

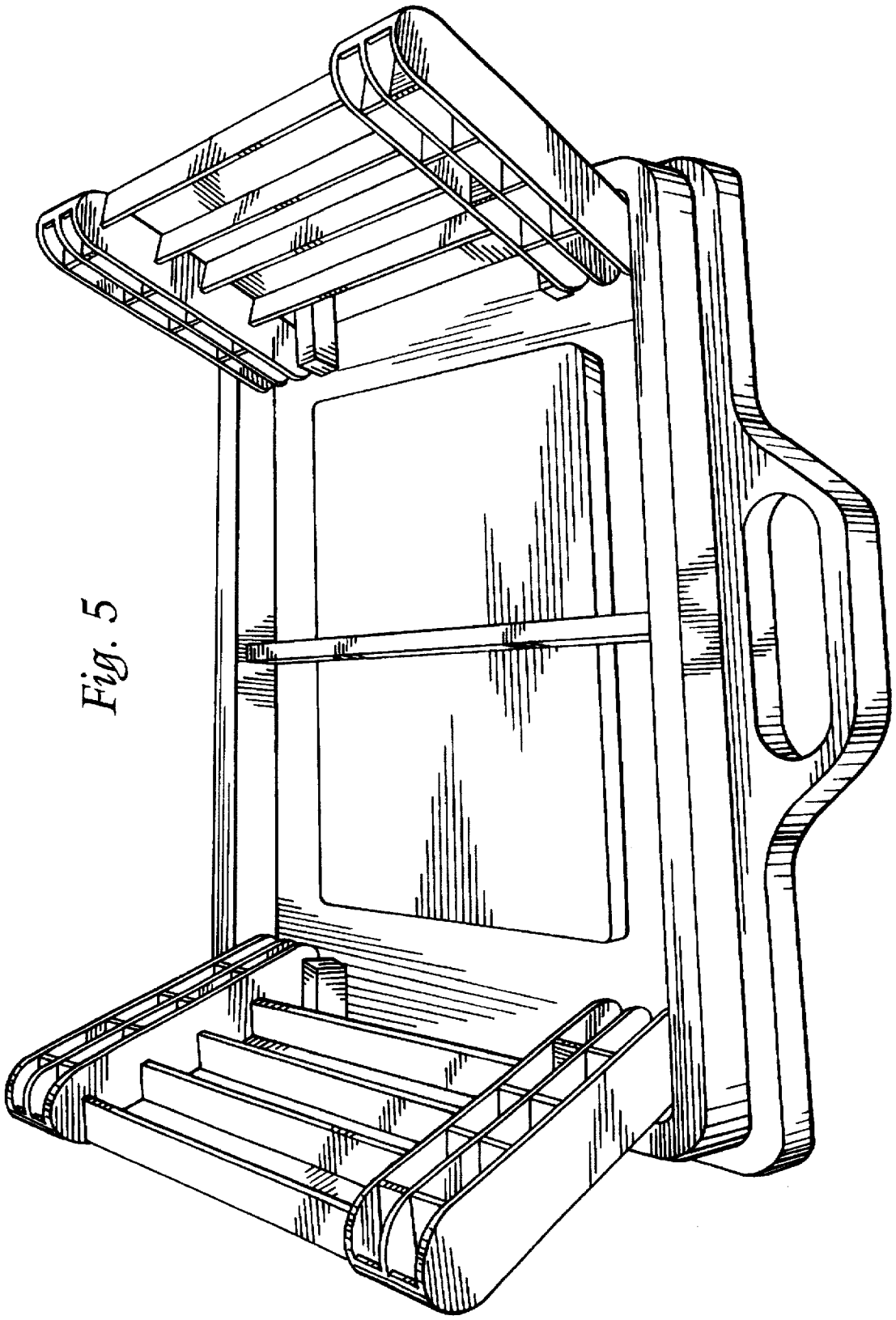

Fig. 5

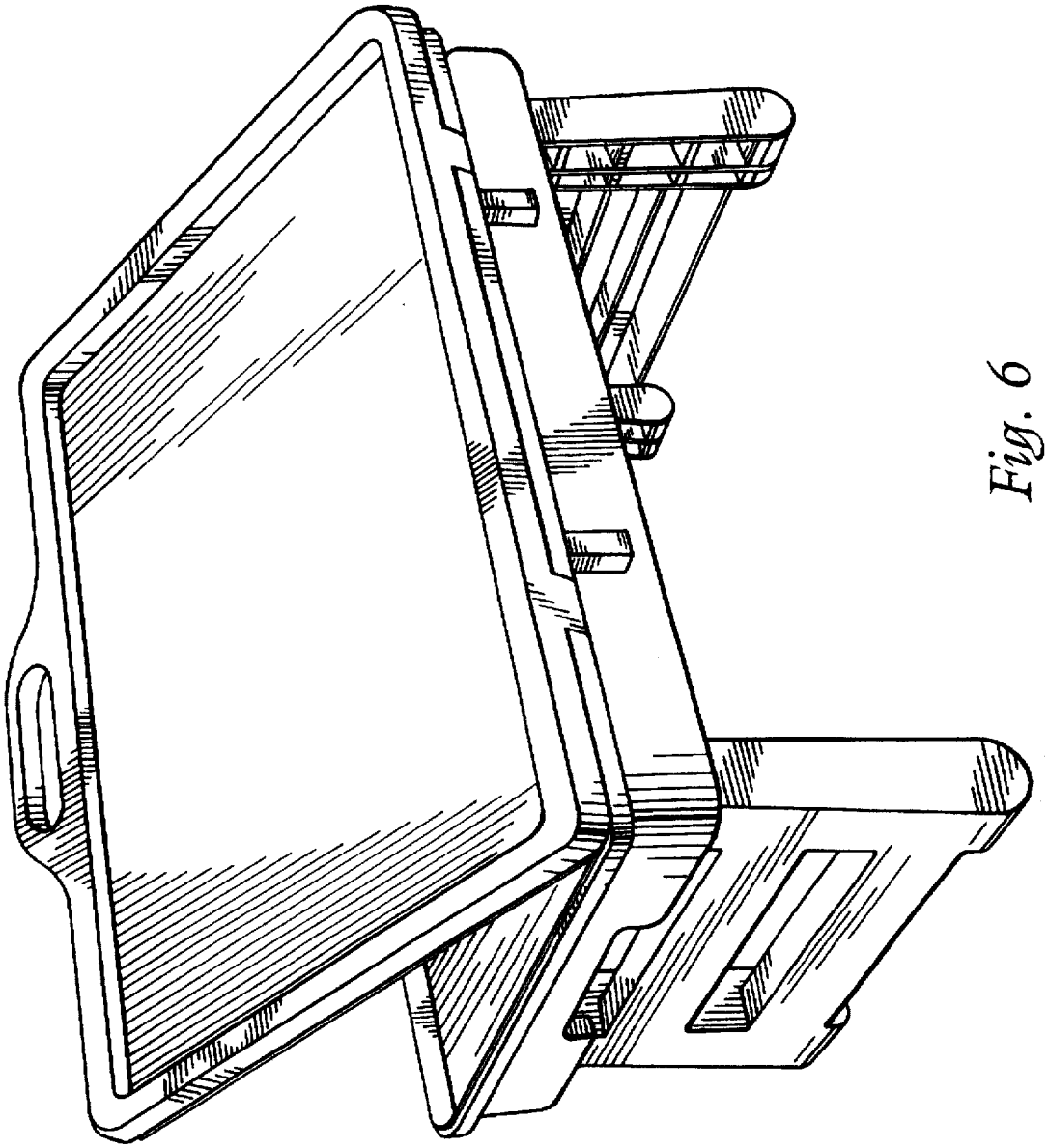

Fig. 6

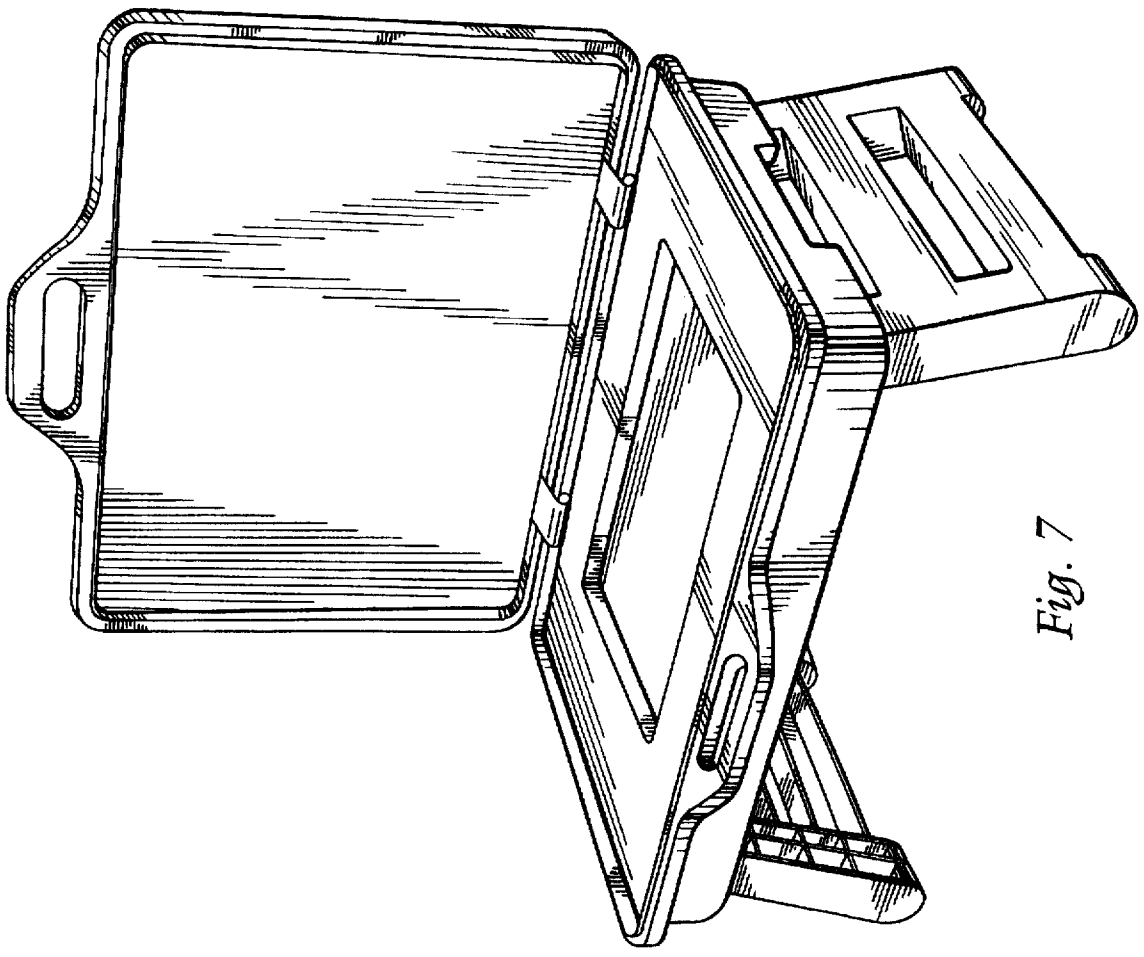

Fig. 7