Dec. 1, 1931. M. D. CHURCH 1,834,333

ANTICLOG CONTROL FOR PUMPS

Filed May 24, 1930 2 Sheets-Sheet 1

FIG. 1

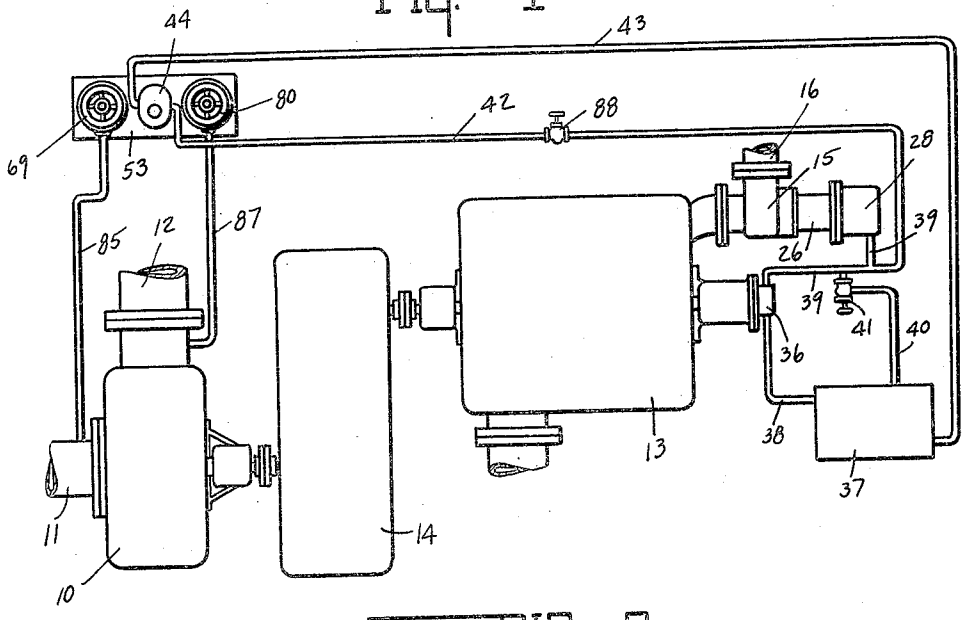

FIG. 2

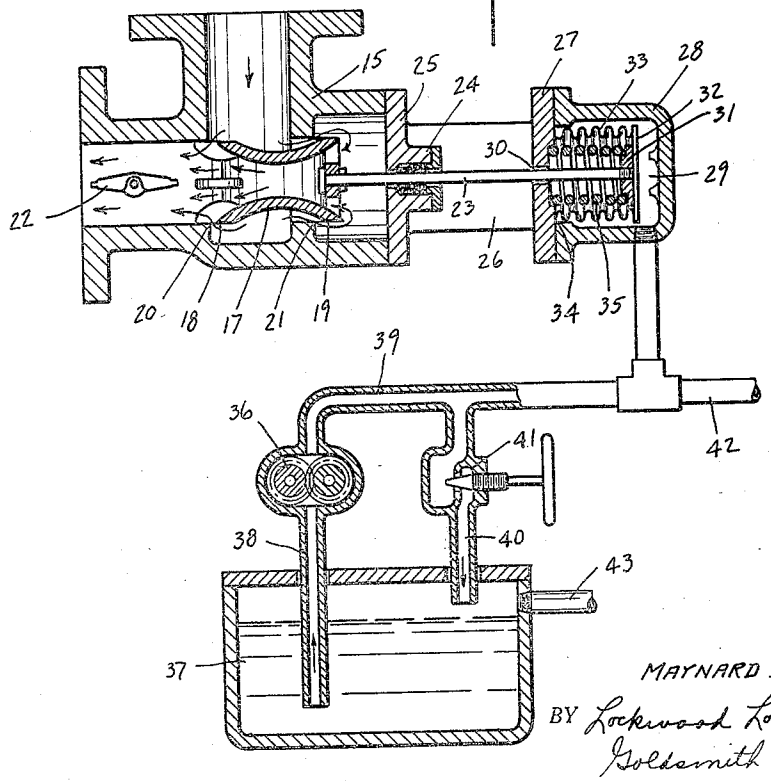

INVENTOR.
MAYNARD D. CHURCH.
BY Lockwood Lockwood Goldsmith & Galt.
ATTORNEYS.

Dec. 1, 1931. M. D. CHURCH 1,834,333

ANTICLOG CONTROL FOR PUMPS

Filed May 24, 1930 2 Sheets-Sheet 2

FIG. 3

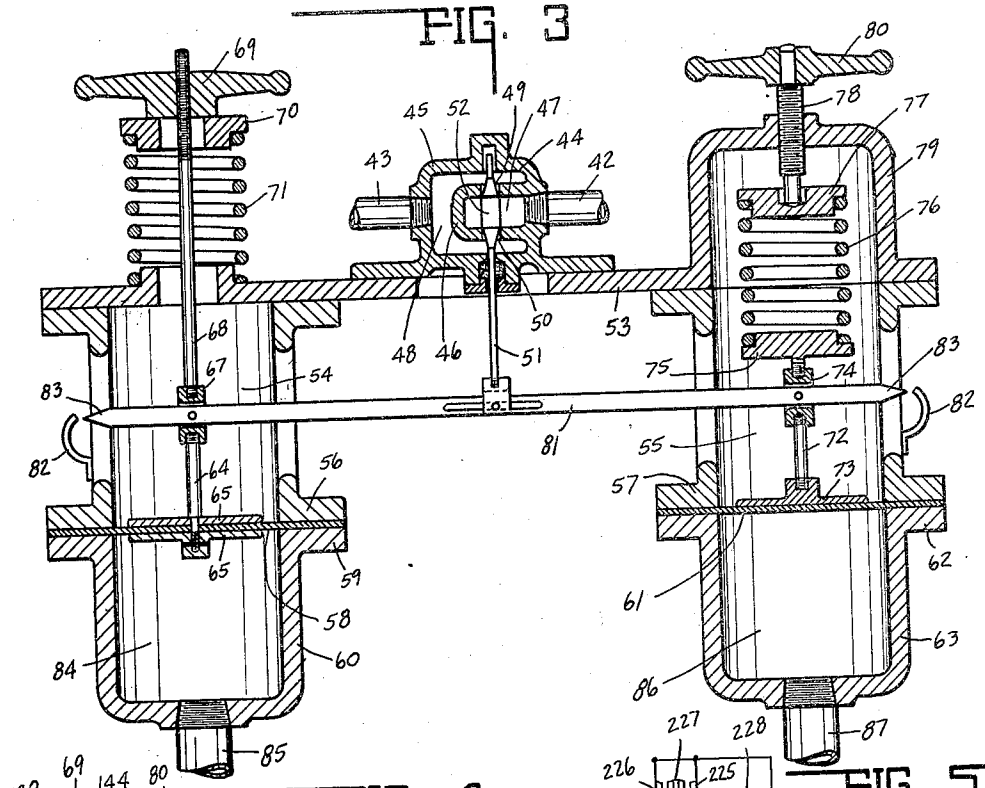

FIG. 4

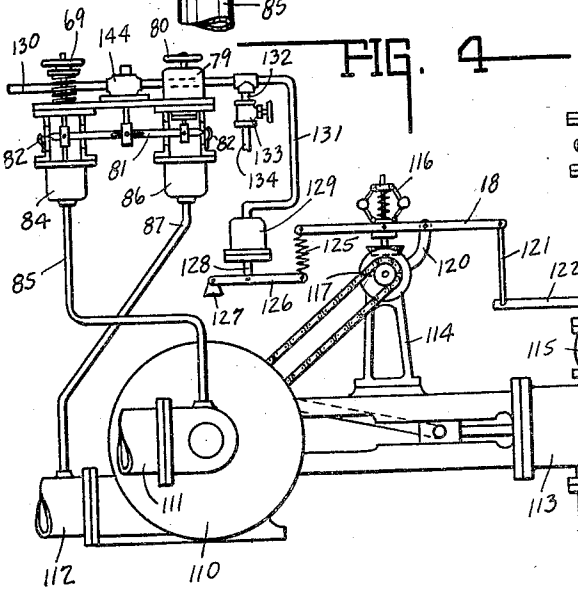

FIG. 5

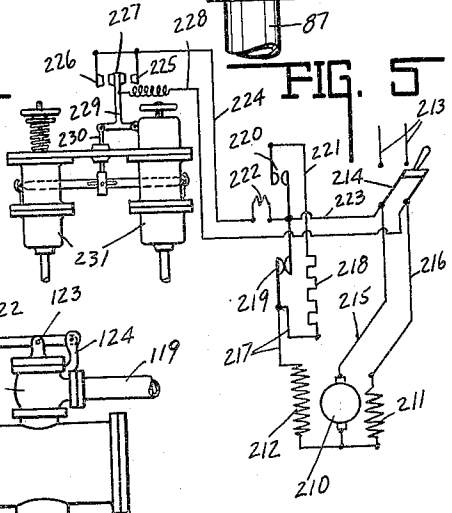

INVENTOR.
MAYNARD D. CHURCH.

BY
Lockwood Lockwood Goldsmith & Galt.
ATTORNEYS.

Patented Dec. 1, 1931 1,834,333

UNITED STATES PATENT OFFICE

MAYNARD D. CHURCH, OF WELLSVILLE, NEW YORK, ASSIGNOR TO MOORE STEAM TURBINE CORPORATION, OF WELLSVILLE, NEW YORK, A CORPORATION

ANTICLOG CONTROL FOR PUMPS

Application filed May 24, 1930. Serial No. 455,192.

This invention relates to control apparatus for dredge pumps or other pumps adapted for pumping solids in suspension in a fluid.

Such pumps are subject to interruption in service whenever the suction pipe, the pump itself or the discharge pipe becomes clogged with solid matter. When clogging starts, if the pump be immediately speeded up, the corresponding increase in the velocity in the conduits will tend to clear the obstruction before it becomes serious. The object of the present invention is to provide control apparatus which automatically increases the speed of the pump when a tendency toward clogging occurs and by which the speeding up is made sure, prompt and effective.

The principal feature of the invention by which this object is obtained resides in the provision of mechanism automatically operable in response to changes in pressure caused by said clogging tendency, said mechanism being adapted to increase the speed-setting of the governor of the engine, turbine or other motive means used to drive the pump. It is well known that when clogging begins in the discharge pipe of a pump, the discharge pressure at the pump will increase and the vacuum in the suction pipe will decrease, i. e. the absolute pressure increases in both discharge and suction pipes. When clogging begins in the suction pipe, the reverse is true and the absolute pressure in both pipes is decreased. In my invention, these changes in pressure are utilized to increase the speed of the pump, whereas pressure changes occurring in normal operation do not necessarily affect the said speed.

Other objects and features will be understood from the accompanying drawings and the following description and claims:

Fig. 1 is a diagrammatic representation illustrating the invention as applied to a centrifugal pump driven by a steam turbine having a hydraulically-operated governor. Fig. 2 is a cross sectional view of a preferred form of governor mechanism for use with the turbine of Fig. 1. Fig. 3 is a sectional view of a preferred form of certain of the control apparatus hereinafter described. Fig. 4 is a diagrammatic representation illustrating the invention as applied to a centrifugal pump driven by a reciprocating engine having a common form of fly-ball governor. Fig. 5 is a diagram of apparatus and electrical connections for the application of the invention to a pump driven by a direct current electric motor.

In Fig. 1 a centrifugal dredge pump 10, having an inlet pipe 11 and an outlet pipe 12, is driven by a steam turbine 13 by means of suitable speed reduction gears contained in a gear housing 14. The turbine 13 is fitted with a governor valve 15 for controlling the flow of steam from a steam pipe 16 to the turbine and hence controlling the speed of the turbine and pump.

The governor valve 15 is preferably of the balanced type illustrated in Fig. 2 and is fitted with a valve member 17 having portions 18 and 19 adapted to engage seat portions 20 and 21 respectively of the valve housing. When said portions are not in engagement steam may flow through the valve to the turbine as indicated by the arrows in Fig. 2. As the valve member 17 is moved to the left, referring to Fig. 2, the flow of steam is reduced and, upon the engagement of said valve portions, flow of steam is stopped. The governor valve is also fitted with a butterfly valve 22 for stopping the turbine in an emergency independently of the movement of valve member 17.

The valve member 17 is movable by means of a valve stem 23 passing through a stuffing box 24 in the valve cap casting 25. The said casting has a portion 26 terminating in a flange 27 to which is attached a housing 28 forming with the flange 27 a chamber 29. The valve stem 23 extends through an opening 30 in flange 27 into the chamber 29 and terminates in a spring seat 31 to which is attached a disc member 32. The said disc member 32 has fastened thereto one end of a member 33 in the form of a corrugated cylinder of flexible material, the opposite end of which terminates in an outwardly-turned flange 34 caught between the flange 27 and housing 28. By this means the chamber 29 is divided into a portion within the corrugated

member 33 and a portion outside of said member. If hydraulic pressure is applied in the latter portion, the tendency thereof is to act upon the disc 32, to collapse the corrugated member 33 and close valve 15. A helical spring 35 is interposed between flange 27 and spring seat 31 and normally tends to resist the closing of said valve.

A governor pump 36, herein shown as a common form of gear pump, is driven by the turbine 13 and supplies oil or other suitable liquid from a reservoir 37 by means of pipes 38 and 39 to the outer portion of chamber 29. A by-pass 40 leads from pipe 39 to the reservoir 37 and is fitted with a needle valve 41 for controlling flow of oil therethrough. A second by-pass consisting of pipes 42 and 43 also leads from pipe 39 to reservoir 37 and is controlled by a valve 44, the operation of which is hereinafter described. In the normal operation of the pump 10, when no clogging tendency is present and a constant speed is desired, the valve 44 is closed and no flow is present in by-pass 42—43. The governor pump 36 then circulates oil from the reservoir 37 through pipes 38 and 39 and by-pass 40 back to the reservoir. For a given setting of needle valve 41, the pressure pipe 39 and chamber 29 depends entirely upon the speed at which the pump 36 is driven by turbine 13. An increase of turbine speed above the desired limit increases the pressure in chamber 29, thus moving the valve member 17 against the action of spring 35 to reduce the flow of steam through valve 15 and correct the turbine speed. A decrease of turbine speed below normal operates to reduce the pressure in chamber 29, to allow opening of valve 15, to return turbine speed to normal. Thus the arrangement of elements just described operates to maintain a substantially constant turbine speed so long as no flow is allowed through valve 44. If, however, the valve 44 is opened, the pressure in pipes 39 and chamber 29 is immediately reduced, opening governor valve 15 and causing an immediate increase in turbine speed.

The valve 44 comprises a housing 45 divided by a partition 46 into an inner chamber 47 communicating with pipe 42 and an outer chamber 48 communicating with pipe 43. The said partition is provided with an upper port 49 and a lower port 50. A valve stem 51 is provided with an enlarged cylindrical portion 52 adapted to engage and close both ports 49 and 50 when in the normal position illustrated in Fig. 3. When the said valve stem is downwardly moved, port 49 is opened and, when upwardly moved, port 50 is opened. Movement of the stem 51 in either direction from the normal position therefor permits flow of oil through by-pass 42—43 to increase the turbine speed.

The valve 44 is mounted upon a plate 53 to which is attached a pair of downwardly-extending cylindrical members 54 and 55 terminating in flanges 56 and 57 respectively. A flexible diaphragm 58 is inserted between flange 56 and a flange 59, forming a part of a housing 60 and bolted to said flange 56. A similar diaphragm 61 is placed between flange 57 and a flange 62 forming a part of a housing 63 and bolted to said flange 57. A stem 64 is attached to diaphragm 58 by means of plates 65 and 66 and is attached at its upper end to a member 67 in turn fastened to a stem 68. The upper end of stem 68 is threadedly engaged with a hand wheel 69 abutting against a spring seat 70. A compression spring 71 is interposed between said spring seat and the upper surface of plate 53. A stem 72 is connected at its lower end to a plate 73 abutting against the upper surface of diaphragm 61. The said stem is attached at its upper end to a member 74 in turn fastened to a spring seat 75. A helical compression spring 76 is interposed between said spring seat and an upper spring seat 77. The last-mentioned spring seat is engaged by the lower end of a vertical stem 78 threadedly engaged with a yoke member 79 forming a part of the plate member 53. A hand wheel 80 is fixed to the upper end of the stem 78 for rotation thereof. A beam member 81 is pivotally connected adjacent one end to the member 67, adjacent the opposite end to the member 74 and at an intermediate point to the lower end of valve stem 51. Indices 82 are placed adjacent the pointed ends 83 of beam 81 to indicate the normal position of said beam, in which position the valve stem 51 is in the proper position to close completely the ports of valve 44. The housing 60 and diaphragm 58 form a chamber 84 which communicates by means of a pipe 85 with the intake pipe 11 of the dredge pump 10. The housing 63 and diaphragm 61 form a similar chamber 86 which communicates by means of a pipe 87 with the outlet pipe 12 of the pump 10.

In starting the pump 10, a valve 88 in pipe 42 is closed, the turbine is supplied with steam and the needle valve 41 is adjusted until the turbine and pump assume the desired normal speed. The hand wheels 69 and 80 are then adjusted to bring the ends 83 of beam 81 to the indices 82 indicating that valve 44 is completely closed. The valve 88 may then be opened without affecting the speed of the turbine so long as the pressures in the inlet and outlet pipes 11 and 12 and hence in chambers 84 and 86 remain unchanged.

In the normal operation of the pump, a varying amount of suspended solids are carried by the liquid passing therethrough. When the amount of said solids is greater than normal, there is an increase of pressure in outlet pipe 12 and chamber 86 accom-

panied by a corresponding increase in vacuum or decrease in pressure in the intake pipe 11 and chamber 84. Within practical limits, the increase in outlet pressure and the decrease in inlet pressure are directly proportional for a given change in the fluidity of the mass. The said pressure changes are not necessarily equal, however, since their actual values depend upon the dimensions of the intake and discharge pipes. These pressure changes cause an upward movement of diaphragm 61 against the pressure of spring 76 and a downward movement of diaphragm 58 against the pressure of spring 71. The diameters of the chambers 86 and 84, the position of the connection between stem 51 and beam 81 and the characteristics of the said springs are so chosen in relation to the pipe sizes that these movements result in a pivotal movement of beam 81 about its connection with valve stem 51, no motion of the said valve stem results and the speed of the turbine is unchanged. A decrease in the amount of suspended solids similarly results in a downward movement of diaphragm 61 and an upward movement of diaphragm 58, again resulting in a simple pivoting motion of beam 81 and not affecting turbine speed. Under normal pump operation, therefore, normal turbine and pump speeds are maintained. It is to be noted that the corresponding changes of suction pressure and discharge pressure under these conditions need not be equal in order to produce the results described, since the said results are controlled by suitable choice of proportion of parts and characteristics of springs.

If a tendency toward clogging develops in the outlet pipe 12, the pressure therein is increased. Since the clogging causes a decrease in the rate flow of material, the vacuum in the inlet pipe 11 also decreases. These pressure changes result in an upward movement of both diaphragms 58 and 61 or an upward movement of one unaccompanied by a corresponding downward movement of the other. In either case the valve stem 51 is upwardly moved, opening valve 44, allowing oil to flow through by-pass 42—43, reducing pressure in chamber 29 and thereby immediately increasing the speed of the turbine and pump to a speed sufficient to clear the clogging material from the pipe 12.

If a tendency toward clogging develops in the inlet pipe 11, there is an immediate increase in the vacuum therein accompanied by a decrease of pressure in pipe 12. There is, therefore, a downward movement of both diaphragms, or a downward movement of one unaccompanied by a corresponding upward movement of the other. The valve stem 51 is, therefore, moved downwardly, the valve 44 is opened and the speed of the turbine increased as before to remove the clogging material. Upon the clearing of the pipes the inlet and outlet pressures assume their normal relation, the control apparatus assumes its normal position and the turbine speed returns to normal.

In Fig. 4, the invention is illustrated as applied to a centrifugal pump driven by a reciprocating steam engine having a common fly-ball governor. A centrifugal pump 110 having inlet pipe 111 and discharge pipe 112 is driven by a steam engine 113. The said engine is fitted with a governor valve 115 adapted to control the speed of the engine by controlling the flow of steam thereto from a steam pipe 119. A support member 114 is carried upon the frame of the engine 113 and supports a fly ball governor 116 and associated driving apparatus 117 of any well known form. The said governor is adapted to move a lever 118 in response to variations in engine speed. The said lever is pivotally carried upon an arm 120 of the support member 114 and is pivotally connected at one end to a downwardly-extending link 121. The said link is pivotally connected to one end of a lever 122, in turn pivotally connected to the stem 123 of valve 115 and pivotally carried by an arm 124 forming a part of the housing of said valve.

The lever 118 has attached to its opposite end a helical spring 125 in turn attached to one end of a lever 126. The opposite end of lever 126 is pivotally carried by any suitable stationary support 127 and has pivotally connected thereto a stem 128 extending within a housing 129 containing mechanism similar in construction and function to that in chamber 29 previously described. By means of this construction, the governor 116 maintains the speed of engine and pump at the desired normal value so long as a given constant pressure is maintained within the housing 129. An increase in said pressure, however, acts to move lever 126 downwardly, thereby exerting a force upon lever 118 through spring 125 tending to open valve 115 and increase the engine speed.

A pipe 130 is connected to any suitable supply of a liquid under a predetermined pressure and supplies said liquid to a valve 144 similar in construction to valve 44. A pipe 131 connects said valve to the chamber 129. A branch 132 leads from pipe 131 to a needle valve 133. Excess liquid is discharged from the said needle valve through a pipe 134. By this means, the pressure in chamber 129 remains at substantially atmospheric pressure so long as valve 144 is closed. The opening of said valve causes an increase of said pressure, the amount of which depends upon the rate of escape of liquid through the valve 133. This increase of pressure acts as previously described to increase the engine speed. The apparatus for actuating valve 144 and the operation of said apparatus is exactly similar to that for actuating valve

44 and will not be again described in detail. The normal variations in inlet and outlet pressures do not effect an opening of valve 144 while pressure changes due to clogging in the inlet or outlet pipes cause opening of valve 144 and an increase in the speed of engine and pump in the same manner as heretofore described.

Fig. 5 is a diagram of apparatus and electrical connections for the application of the invention to a pump driven by a direct current electric motor. In the said figure, the motor for driving the pump has an armature 210, series field 211, and shunt field 212. Power therefor is supplied upon power lines 213 controlled by cutout switch 214. One pole of the switch 214 is connected to the armature 210 by means of a wire 215 and the opposite pole of said switch is connected to series field 211 by means of a wire 216. One terminal each of the armature, shunt field and series field are connected together in the usual manner. The opposite terminal of the shunt field 212 is connected by a wire 217 with a resistor 218 and a normally closed contact element 219. The contact element 219 forms part of a double pole magnetic relay having a normally open contact element 220 connected by a line 221 to the opposite terminal of the resistor 218. The said relay is actuated to close the contact element 220 and open the contact element 219 by the energizing of a magnet 222. One terminal of the said magnet is connected to the midpoint of the relay and to the switch 214 by means of a wire 223. When the said magnet is deenergized, the shunt field circuit for the pump motor is as follows: 213, 214, 223, 219, 217, 212, 211, 216, 214, 213. The resistor 218 is, therefore, not in the circuit and the motor operates at its normal speed. When the magnet 222 is energized, the resistor is placed in series with the shunt field by means of the following circuit: 213, 214, 223, 220, 221, 218, 217, 212, 211, 216, 214, 213. The motor then operates at an increased speed.

The second terminal of the magnet 222 is connected by a wire 224 to a pair of stationary contact members 225 and 226 having associated therewith a movable contact member 227. The member 227 is connected by a wire 228 to the switch 214 and is carried upon the upper arm of a bell crank 229, the opposite arm of which is attached to a vertical stem 230. The stem 230 is actuated by mechanism indicated generally by the numeral 231 which is exactly similar to that by means of which the stem 51 is actuated for the operation of the valves 44 and 144, previously described. The mechanism 231 is connected to the pump in the same manner as that previously described and operates to maintain the contact member 227 out of engagement with the contact members 225 and 226 for normal operation of the pump. When clogging occurs in the suction or discharge pipe of the pump, the resulting pressure changes cause contact member 227 to engage one or the other of the members 225 and 226, energizing the magnet 222 and increasing the speed of motor and pump to remove the clogging material from the said conduits. Other suitable wiring connections are used to apply the invention to alternating current motors.

Obviously other variations in the application of the invention and the details of the apparatus disclosed are possible without departing from the broader features of the invention as set forth in the following claims. In the claims, the use of the word "pressure" refers to absolute pressures.

The invention claimed is:

1. The combination of a pump, an inlet and an outlet pipe therefor, motive means for said pump, and mechanism adapted to increase the speed of said pump, said mechanism being automatically operable in response to an increase of pressure in said outlet pipe only when unaccompanied by a corresponding decrease of pressure in said inlet pipe.

2. The combination of a pump, an inlet and an outlet pipe therefor, motive means for said pump, and mechanism adapted to increase the speed of said pump, said mechanism being automatically operable in response to a decrease of pressure in said outlet pipe only when unaccompanied by a corresponding increase of pressure in said inlet pipe.

3. The combination of a pump, an outlet and an inlet pipe therefor, motive means for said pump, and mechanism adapted to increase the speed of said pump, said mechanism being automatically operable in response to an increase of pressure in said inlet pipe only when unaccompanied by a corresponding decrease of pressure in said outlet pipe.

4. The combination of a pump, an outlet and an inlet pipe therefor, motive means for said pump, and mechanism adapted to increase the speed of said pump, said mechanism being automatically operable in response to a decrease of pressure in said inlet pipe only when unaccompanied by a corresponding increase of pressure in said outlet pipe.

5. The combination of a pump, inlet and outlet pipes therefor, motive means for said pump, a speed governor for said motive means, a fluid operated device for modifying the setting of said governor, a valve for controlling the flow of fluid to said device, a movable member for operating said valve, said valve being adapted to be similarly operated by movement of said member in either direction from a predetermined normal position, and mechanism for automatically moving said member in one direction from said normal position when clogging of said inlet pipe

occurs and for automatically moving the same from said normal position in the opposite direction when clogging of said outlet pipe occurs.

6. The combination of a pump, inlet and outlet pipes therefor, motive means for said pump, a speed governor for said motive means, a valve, a fluid operated device controlled by said valve and adapted to increase the speed setting of said governor when said valve is opened, a movable member for operating said valve, said valve being adapted to be opened by movement of said member in either direction from a predetermined normal position, a lever pivotally attached to said valve operating member and extending transversely thereof in both directions from the point of said attachment, and a pressure responsive device operably associated with each end of said lever, one of said pressure responsive devices being adapted to move one end of said lever in one direction when pressure in said outlet pipe increases and in the opposite direction when said pressure decreases and the other of said pressure responsive devices being adapted to move the opposite end of said lever in the first-mentioned direction when pressure in said intake pipe increases and in the opposite direction when said intake pressure decreases.

7. The combination of a pump, inlet and outlet pipes therefor, an electric motor for driving said pump, an electric switch, electrical connections between said switch and said motor adapted to increase the speed of said motor when said switch is operated, a movable member for operating said switch, said switch being adapted to be operated for increasing the speed of the motor by movement of said member in either direction from a predetermined normal position, and mechanism for automatically moving said member in one direction from said normal position when clogging of said inlet pipe occurs and for automatically moving the same from said normal position in the opposite direction when clogging of said outlet pipe occurs.

8. The combination of a pump, inlet and outlet pipes therefor, an electric motor for driving said pump, an electric switch member, electrical connections between said motor and said switch for increasing the speed of said motor when said switch is operated, a movable member for operating said switch, said switch being adapted to be operated for increasing the speed of said motor by movement of said member in either direction from a predetermined normal position, a lever pivotally attached to said switch-operated member and extending transversely thereof in both directions from the point of said attachment, and a pressure-responsive device operatively associated with each end of said lever, one of said pressure-responsive devices being connected to said outlet pipe, and being adapted to move one end of said lever in one direction when pressure in said outlet pipe increases and in the opposite direction when said pressure decreases, and the other of said pressure-responsive devices being connected to said inlet pipe and being adapted to move the opposite end of said lever in the first-mentioned direction when said pressure in said intake pipe increases and in the opposite direction when said intake pressure decreases.

In witness whereof, I have hereunto affixed my signature.

MAYNARD D. CHURCH.