No. 775,882. PATENTED NOV. 22, 1904.

M. P. ZINDORF.

GARMENT SUPPORTER.

APPLICATION FILED JUNE 2, 1903.

NO MODEL.

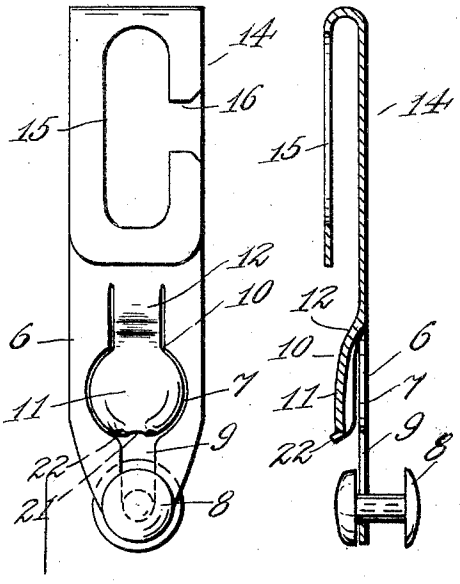

Fig. 1

Fig. 2

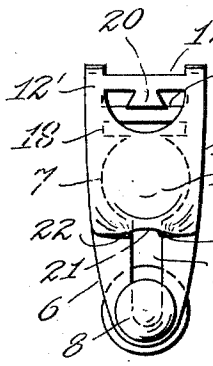

Fig. 4

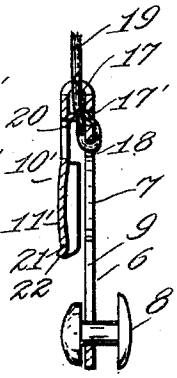

Fig. 5

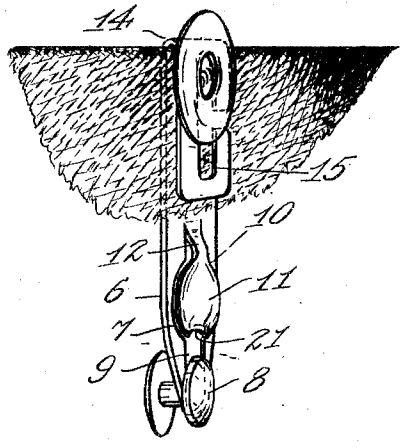

Fig. 3

WITNESSES:

D. Talbot

Anita Adams

INVENTOR

Matthias P. Zindorf

BY

Frank E. Adams.

ATTORNEY

No. 775,882. Patented November 22, 1904.

UNITED STATES PATENT OFFICE.

MATTHIAS PATRICK ZINDORF, OF SEATTLE, WASHINGTON.

GARMENT-SUPPORTER.

SPECIFICATION forming part of Letters Patent No. 775,882, dated November 22, 1904.

Application filed June 2, 1903. Serial No. 159,794. (No model.)

To all whom it may concern:

Be it known that I, MATTHIAS PATRICK ZINDORF, a citizen of the United States of America, and a resident of the city of Seattle, in the county of King and State of Washington, have invented certain new and useful Improvements in Garment-Supporters, of which the following is a specification.

My invention relates to improvements in garment-supporters, and has special reference to a device of this class especially adapted for supporting the drawers from the trousers.

The object of this invention is to provide a simplified and inexpensive garment-supporter which will admit of ready attachment and detachment and which is positive and reliable in use.

The above-mentioned and other desirable objects are attained by the construction, combination, and arrangement of parts as disclosed on the drawings, set forth in this specification, and succinctly pointed out in the appended claims.

With reference to the drawings filed herewith and bearing like reference characters for corresponding parts throughout, Figure 1 is a face view of the supporter. Fig. 2 is a longitudinal section thereof. Fig. 3 is a view in perspective showing the supporter engaged with the waistband of the trousers. Fig. 4 is a face view of a supporter of modified form, and Fig. 5 is a longitudinal section of the modified supporter.

My invention includes a pendent part 6, formed from a section of suitable resilient sheet metal, which is provided with an aperture 7 adjacent one end of suitable size to receive freely a button attached to the garment to be supported or the head of a loose stud, as 8, which may be employed in place of a fixed button, as will be later set forth. This aperture is formed at the upper end of a downwardly-extending slot 9, which is of suitable width to receive freely the shank of the fixed button or the stem of stud 8, and the lower end of this slot is preferably formed semicircular, and the side edge portions of the pendant lying opposite to this slot are converged downwardly, and the adjacent end of the pendant is rounded over for the sake of neatness and to lessen the weight of the supporter. At one side of the pendent part 6 is a spring-keeper 10, Figs. 1, 2, and 3, which consists of a head part 11, substantially conforming in outline to the aperture 7 and arranged thereover, and a spring part or tongue 12, connected at one end with said head and extending upwardly therefrom and connected at the opposite end with the body of the pendent part. This keeper is arranged so that the head part will normally lie close to the side of the pendent part and yield outwardly, as permitted by the spring part or tongue, when the button or head of the stud is pressed into the aperture, and when the button or stud is seated in slot 9 the head of the keeper will return to normal position and lie opposed to the button or the head of the stud, and thereby prevent accidental detachment of the supporter.

Reference-numeral 14, Figs. 2 and 3, indicates a hooked part which is connected with the pendent part and adapted as convenient means for suspending the device from the waistband, and this part preferably consists of an upwardly-extending portion of the sheet-metal section from which the pendent part is formed and which portion is bent over upon itself in the form of a long hook. In the overlying portion or bill of this hook is an elongated slot 15 of suitable width to receive freely the shank of a trousers-button, and leading from this slot to the side edge of the bill is an entrance-slot 16, which is located substantially midway the ends of the long slot and is of suitable width to receive the shank of said button freely and flared slightly at the outer end to facilitate the entrance of said shank.

In providing the spring-keeper a portion of the sheet-metal section from which the device is constructed is employed, and in the construction disclosed in Figs. 1, 2, and 3 the head of this keeper consists of the portion of metal struck or pressed out in forming the aperture 7, and the spring part or tongue consists of a rectangular integral portion of the metal separated at opposite side edges from the body of the pendent part. In the modified construction shown in Figs. 4 and 5 the

spring-keeper 10′ consists of an upwardly-extending portion of the sheet-metal section from which the pendant is formed, and which portion is bent downwardly upon itself, so that the free end part will lie over the aperture 7 and act as the head 11′ of the keeper, while the remainder of the downwardly-bent part acts as the spring part or tongue 12′. When the device is constructed as shown in Figs. 4 and 5, suitable transversely-disposed slots, as 17, 17′, and 18, are formed in the upper end of the pendent portion of the device to receive the end of a suitable suspending strap, as a section of elastic 19, which is threaded through said slots, and a portion 20 of the metal in the spring part or tongue 12′ is cut free, so that it can be bent back to engage the strap, and thereby fasten it to the device.

In forming the head part of the spring-keeper 10 or 10′ the under side is suitably concaved, so that the head of the stud or the button will seek a central position thereon when pressed through aperture 7 and the stem of the stud or shank of the button thereby brought into alinement with slot 9 to facilitate its entrance, and also when the head of the stud or the button is forced under this head part in detaching the device this concaved surface serves to bring it to a central position relatively to said aperture, and thereby facilitates the withdrawal. This head part is also provided with a semicircular notch 21 in the edge over slot 9, and at each end of this recess a marginal portion of the head is bent outwardly to provide upwardly-turned riders 22, which facilitate the withdrawal of the head of the stud or the button.

The construction shown in Figs. 1, 2, and 3 adapts the device for supporting drawers from the trousers, and when so used the hooked part is first partly engaged with the waistband, with the pendant lying between the trousers and drawers, and the device is then slipped along the waisband to enter the shank of the suspender-button through the slot 16 into the elongated slot 15, when the device is pressed downwardly to cause said shank to lie well up toward the upper end of last said slot, after which the drawers are drawn up to place, and the loose stud 8 is then placed inside the drawers and the head thereof forced through aperture 7 against the spring-keeper, carrying a portion of the drawers therewith, and then pressed downwardly to enter the shank in slot 9 and clear the head of the stud from the keeper, which then springs back to normal position and prevents accidental disengagement of the stud.

In removing the trousers without the drawers it is simply necessary to disengage the hooked part of the device from the suspender-button, and when desired to disconnect the supporter from the drawers the head of the loose stud is forced well toward the body of the pendant and the stud then pressed upwardly under the head of the spring-keeper. If desired, a button can be sewed on the outer side of the drawers at the proper point to engage in the aperture of the pendent part of the device and the button pressed inwardly through this aperture and then downwardly to engage the shank thereof in slot 9 when connecting the drawers to the supporter.

The modified device disclosed in Figs. 4 and 5 is adapted for use where a yielding connection between the garments is required—such as, for example, between the waistband and hose—and in this case the elastic strap 20 is secured at the upper end to the waistband, and the pendent part of the device connected with the hose by means of the loose stud or a button sewed to the hose in substantially the manner heretofore set forth for attaching the device to the drawers.

This device is simple and inexpensive of construction and of a neat and pleasing appearance, and, furthermore, it can be readily formed from a single section of suitable sheet metal of resilient nature and presents comparatively broad side surfaces to the garments which act to reduce the wear and tear of the device on the garments when in use.

Having thus described my invention, what I claim, and desire to secure by Letters Patent, is—

1. A garment-supporter including a section of sheet metal having a slot in one end portion and an aperture at the upper end of said slot adapted to receive the head of a stud or the like, an integrally-formed spring-keeper consisting of a concaved head part lying over said aperture and having a notch in the edge adjacent said slot and portions of said edge bent outwardly at opposite sides of the notch, and a spring part connecting said head and section.

2. A garment-supporter formed from a section of resilient sheet metal having a slot in one end portion and a part of said portion being freed to provide an aperture at the upper end of said slot and an integrally-formed spring-keeper, consisting of a head part lying over said aperture and a spring-tongue extending upwardly from said head, and the opposite end portions bent over to form a hooked part and provided with an elongated slot in the bill portion and a lateral slot extending from said elongated slot to the side edge of the bill.

3. A garment-supporter formed from a section of resilient sheet metal having a slot in one end portion and a part of said portion being freed to provide an aperture at the upper end of said slot and an integrally-formed spring-keeper, consisting of a concaved head part lying over said aperture and having a semicircular notch in the edge adjacent said slot and portions of said edge bent outwardly at the ends of said notch, and a spring-tongue

extending upwardly from said head, and the opposite end portion bent over to form a hooked part and provided with an elongated slot in the bill portion and a lateral slot extending from said elongated slot midway its length to the side edge of the bill.

4. In a garment-supporter, the combination with a pendent part, of a hooked part formed with an elongated slot in the bill portion and a lateral slot extending from said elongated slot to the side edge of the bill.

Signed at Washington, District of Columbia, this 5th day of May, 1903.

MATTHIAS PATRICK ZINDORF.

Witnesses:
GEORGE L. GORMAN,
ERNEST G. THOMPSON.