Oct. 28, 1930. A. R. CHALKER ET AL 1,779,586

RECIPROCATING ENGINE

Filed Nov. 27, 1925 3 Sheets-Sheet 1

Fig. 1.

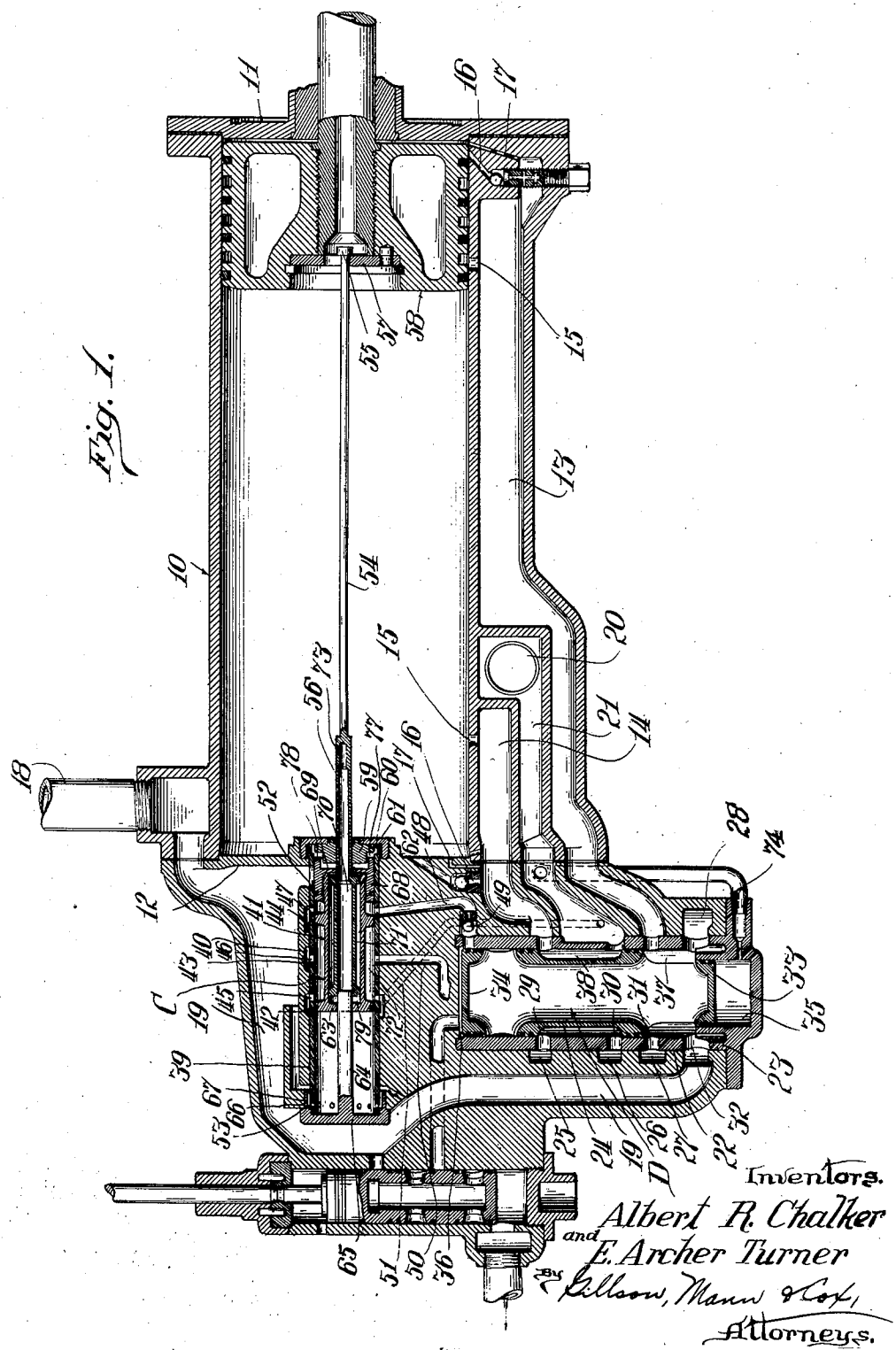

Inventors.
Albert R. Chalker
and
E. Archer Turner
By Gillson, Mann & Cox,
Attorneys.

Oct. 28, 1930. A. R. CHALKER ET AL 1,779,586

RECIPROCATING ENGINE

Filed Nov. 27, 1925 3 Sheets-Sheet 2

Fig. 2.

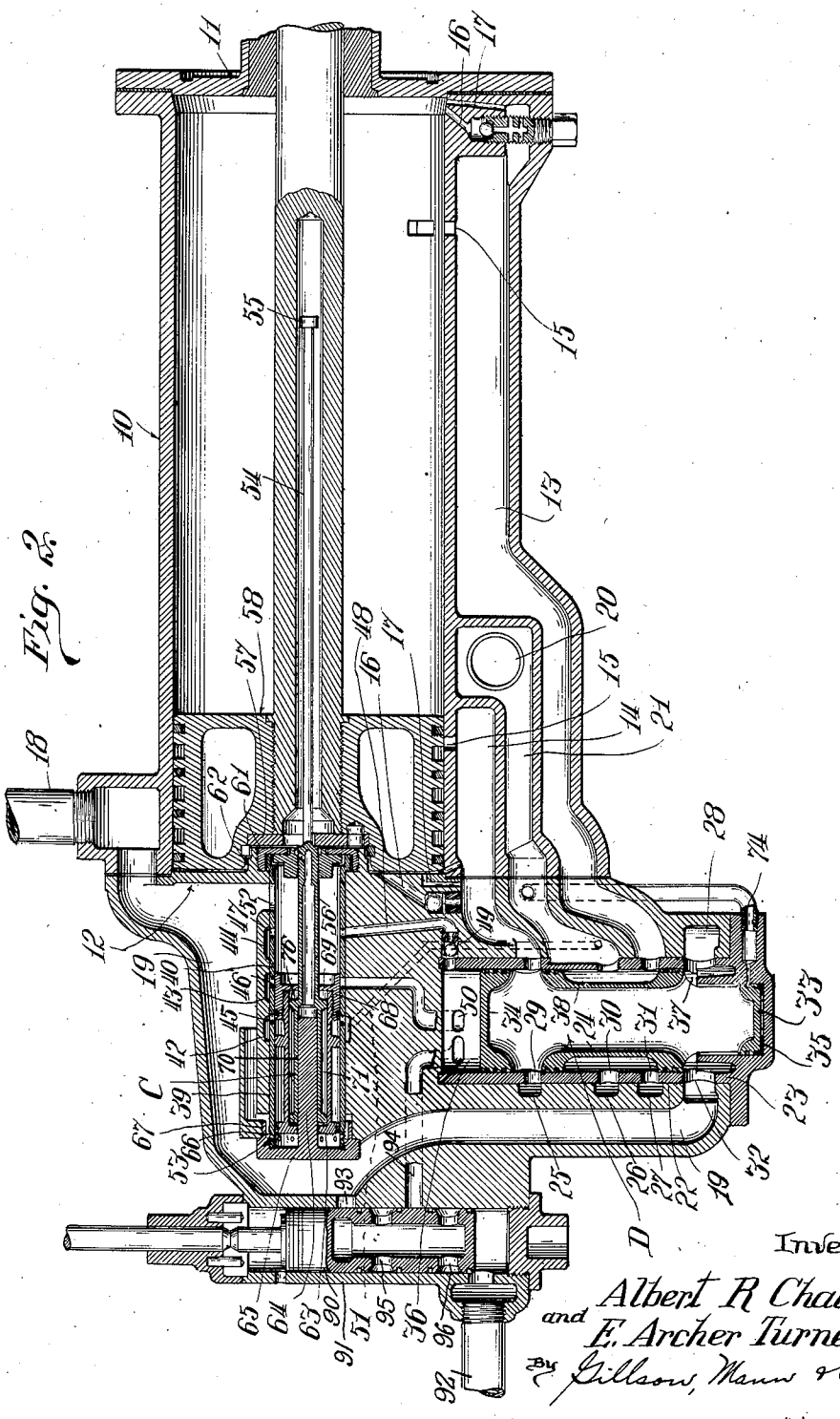

Inventors
Albert R Chalker
and E. Archer Turner
By Gillson, Mann & Cox,
Attorneys

Oct. 28, 1930. A. R. CHALKER ET AL 1,779,586

RECIPROCATING ENGINE

Filed Nov. 27, 1925 3 Sheets-Sheet 3

Fig. 4.

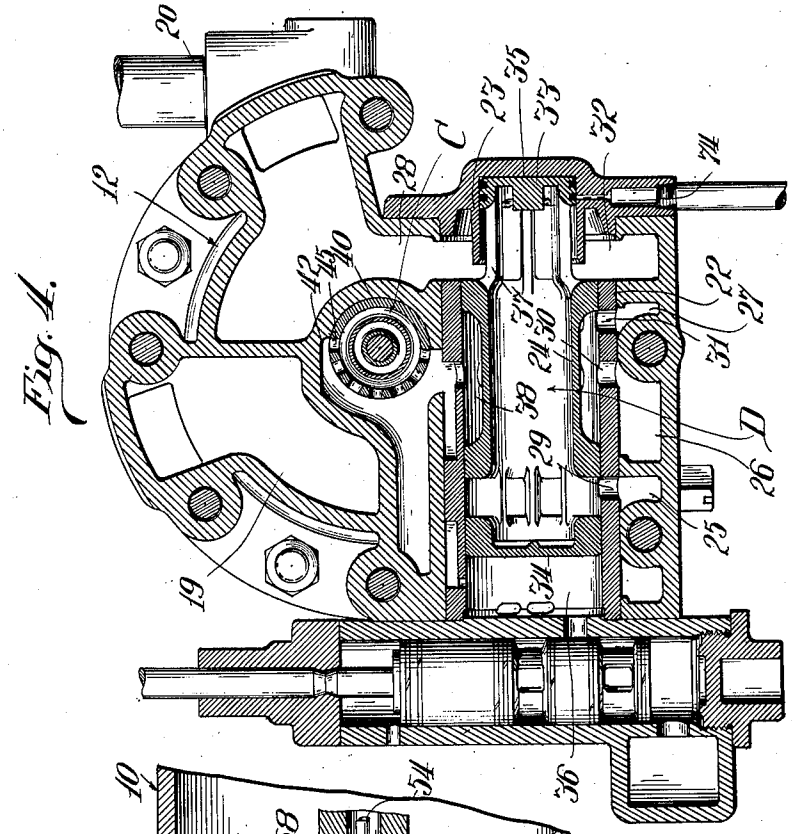

Fig. 5.

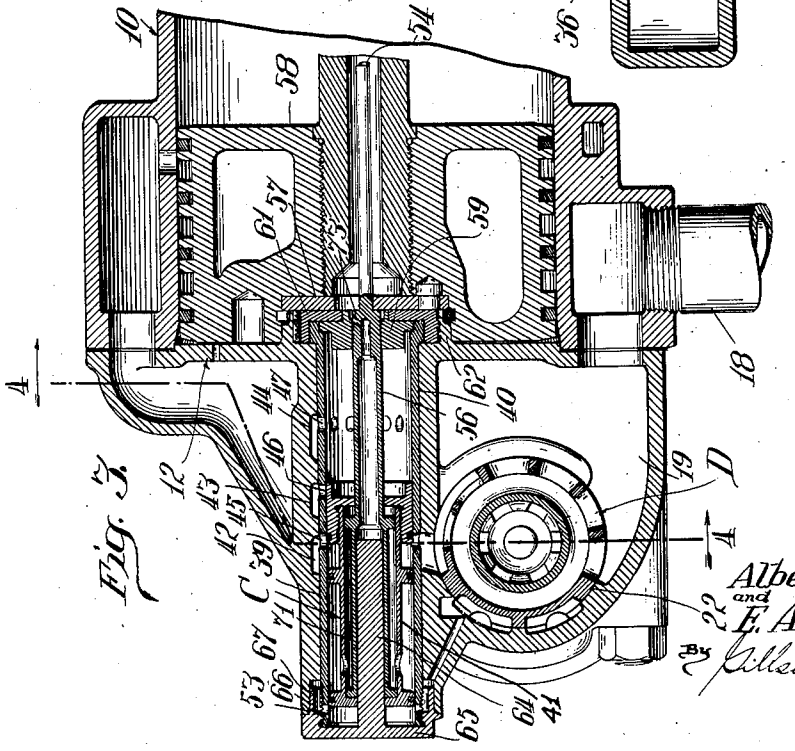

Inventors
Albert R. Chalker
and
E. Archer Turner
By Gilson, Mann & Co.
Attorneys

Patented Oct. 28, 1930 1,779,586

UNITED STATES PATENT OFFICE

ALBERT R. CHALKER AND EDWIN ARCHER TURNER, OF PITTSBURGH, PENNSYLVANIA, ASSIGNORS, BY MESNE ASSIGNMENTS, TO THE STANDARD STOKER COMPANY INC., OF NEW YORK, N. Y., A CORPORATION OF DELAWARE

RECIPROCATING ENGINE

Application filed November 27, 1925. Serial No. 71,510.

This invention relates to steam engines of that type of which there is no crank shaft to convert the reciprocating motion of the piston into rotary motion and in which, as a general rule, the valve mechanism is operated by the piston or parts connected therewith. The principal objects of the invention are to increase the speed of this type of engine, to relieve the strains on the valve gear, and to reduce the weight and the space required for the engine.

The preferred construction is illustrated in the accompanying drawings, in which

Figs. 1 and 2 are longitudinal sectional views showing the position the parts assume when the piston is in opposite ends of its stroke, the distributing valve being rotated through 90° in order to show it in longitudinal section with the other parts;

Fig. 3 is a longitudinal section corresponding to Figs. 1 and 2, showing the actual arrangement, and

Fig. 4 is a transverse sectional view taken on the line 4—4 of Fig. 3.

In these drawings the reference numeral 10 indicates a cylinder having heads 11 and 12, and passages 13 and 14 communicating with the cylinder through ports 15, 16, and 17.

With the parts shown in Fig. 1 when steam is admitted through the passage 13 it enters the cylinder behind the piston through the small port 17 and the larger port 16. When the piston has moved slightly less than its width towards the left it opens port 15 allowing more rapid ingress of steam behind the piston. As it approaches the other end of the cylinder, the piston closes the port 15, trapping exhaust steam in the remaining portion of the cylinder. The pressure of the exhaust steam closes the check valve in the port 16 and leaves the small port 17 the only passage for escape. Hence, an effective cushion is provided for the piston at the end of the stroke.

The cylinder head 12 provides a casing for the valve mechanism by which steam is supplied to and exhausted from the passages 13 and 14. As shown, steam from the boiler enters by pipe 18 and is constantly present in the passage 19. The exhaust line 20 is equipped with a passage 21.

The passages 13 and 14 are alternately connected with the exhaust passage 21 and the live steam passage 19 by a distributing valve generally indicated by D, and the position of this valve is determined by a control valve generally indicated by C.

The head 12 is provided with an elongated bore 22 receiving the tubular seat 23 of the piston valve 24. The bore 22 is equipped with cored passages 25, 26, 27 and 28 extending part of the way around the tubular valve seat 23, which has a plurality of openings 29, 30, 31 and 32, communicating with the corresponding bores to provide free ingress or egress, as the case may be. The ports 29 and the passages 25 communicate with the steam passage 14. The passage 26 and the ports 30 communicate with the exhaust passage 21. Passages 27 and ports 31 communicate with the steam passage 13 and the passage 28 and ports 32 communicate with the steam passage 19.

The piston valve 24 is tubular with closed ends 33 and 34 of different size, which form effectual pistons operating within corresponding cylinders, indicated by 35 and 36. Adjacent to its lower and smaller end 33 the piston valve is equipped with ports 37 which are always in communication with the ports 32 and also communicate with the ports 31 in the position in which it is shown in Fig. 1. The intermediate portion of the piston valve 24 is reduced on the outer side to form a passage 38 for establishing communication between the ports 30 and 29 when the parts are in the position shown in Fig. 1, which, in effect, establishes communication between the steam passage 14 and the exhaust passage 21. This passage 38 also establishes communication between the ports 30 and 31 when the parts are in the position shown in Fig. 2, which, in effect, establishes communication between the steam passage 13 and the exhaust passage 21.

The cylinder head 12 is also bored, as indicated at 39, to receive a tubular valve seat 40 of a piston valve 41. The cylinder head is provided with cored passages 42, 43 and

44 communicating with ports 45, 46 and 47, respectively, in the valve seat 39. The ports 47 are connected with the cylinder 36 of the distributing valve by a passage 48, which enters that cylinder at its upper end and is equipped with a check valve 49, adjacent to the cylinder. The ports 46 are connected with the cylinder 36 by passage 50, which enters the cylinder somewhat below the upper end, as best indicated in Fig. 2. The ports 45 are connected with the exhaust passage 21 by a passage 51.

The tubular valve seat 39 has ports 52 and 53 adjacent to its opposite ends to establish communication between the interior of the valve seat and the live steam passage 19.

The control valve C is operated by a valve rod 54 which has a button 55 forming a shoulder at one end and an enlargement 56 forming a shoulder at the other end, both of which shoulders cooperate with the plate 57 carried by the piston 58.

The enlarged portion 56 of the valve rod is fitted into a bearing 59, driven into the counter bore 60, of the tubular valve seat 39. This bearing and the valve seat are secured in the cylinder head by the flanged cap 61 threaded within the boss 62 on the cylinder head.

The piston valve 41 is hollow and has an inwardly directed flange 63 at one end which is reamed to a close sliding fit with the plunger 64, the outer surface of which is ground. The plunger 64 is carried by a cap 65, threaded on the end of the tubular valve seat 39. In order to properly align the stud with the axis of the valve seat the cap 65 is provided with a flange 66 closely fitted within the bore 67 of the cylinder head.

The end of the piston valve 41 opposite to the flange 63 is equipped with a collar 68 having a flange 69 corresponding to flange 63 and reamed on its inner surface to make close sliding fit with the ground exterior of the enlargement 56 on the valve rod. Beyond this enlargement the valve rod is equipped with a head 70 somewhat shorter than the distance between the flanges 59 and 63. To decrease the weight the head is cut away between its ends, as indicated at 71.

The exterior of the tubular valve 41 is cut away, as indicated at 72, to provide a passage to establish communication between the passages 50 and 51. The enlargement 56 and the head 70 are hollow and the latter makes a close sliding fit with the stud 64 while the former communicates with the cylinder 10 through the port 73.

The stud 64 controls the passage of steam into the space 79 (Fig. 1) and operates to form a dash pot with the hollow head 70, cushioning the movement of the valve rod at the left end of its stroke. The port 73 admits steam from the cylinder 10 (whether it be live steam or exhaust) to the interior of the valve rod for balancing the action of steam on the right face of the button 55 in Fig. 1.

The cylinder 35 at the lower end of the distributing valve, as shown in Figs. 1 and 2, is connected with the exhaust passage 21 by an auxiliary passage 74.

Operation

With the distributing valve D in the position shown in Fig. 2 live steam from the passage 19 is being admitted to the passage 14 and is entering the cylinder through the ports 16 and 17. The control valve C is at the left, as shown in Fig. 2. Ports 52 and 53 connecting the interior of the tubular seat 39 with the live steam passage 19 establishes balanced pressure on the piston valve 41. Steam has leaked past the joint between the flange 69 and the enlargement 56 and filled the space indicated by 76 in Fig. 2.

As the piston 58 approaches the position shown in Fig. 1, the plate 57 strikes the button 55 and causes the rod 54 to take up movement with the piston and shift the valve 41 to the position shown in Fig. 1. The steam in the space 76 cushions the connection between the rod 54 and the balanced valve 41, and relieves the strain of overcoming the inertia of the valve and the friction of the valve on its seat.

If the piston 58 is moving rapidly the momentum communicated to the valve 41 and the valve rod will tend to carry them onto the right after the piston has stopped. The collar 68 closes the ports 52 and traps a small amount of steam in the end of the tubular seat 39 and forms a cushion to bring the valve and valve rod to rest without shock. In the construction shown, the bearing 59 is cut away at 77 to receive the flanged end 78 of the collar 68.

With the valve 41 in the position shown in Fig. 1, the passage 48 is closed, discontinuing the supply of live steam to the cylinder 36. The passage 50 is connected with the passage 51 through the passage 72 on the exterior of the valve, which establishes communication between the cylinder 36 and the exhaust passage 21. The live steam pressure against the larger piston 34 of the distributing valve is greater than the pressure against the smaller piston 33 and, hence, the piston valve rises towards the position shown in Fig. 1. In so doing it closes the end of the passage 50 and traps a small amount of exhaust steam which, attempting to escape through the passage 48, closes the check valve 49, thus a cushion is formed to bring the piston valve to rest at approximately the position shown in Fig. 1, without shock.

With the distributing valve D in the position shown in Fig. 1, live steam is being supplied to the steam passage 13 and the steam

passage 14 is connected with the exhaust passage 21. Piston 58 will then start towards the left. As it approaches the position shown in Fig. 2, the plate 57 strikes the shoulder formed by the enlargement 56 on the valve rod and causes the valve rod to move to the left with the piston and shift the control valve 41 towards the position shown in Fig. 2. The space 79 between the flange 63 and the head of the valve rod has become filled with steam and cushions the blow of the piston on the valve rod. If the piston 58 is moving rapidly there is a tendency for the valve rod and valve to continue moving to the left after the piston stops. If so, the end of the valve will close the ports 53 and trap steam in the end of the tubular valve seat 39 and bring the parts to rest without shock.

With the control valve in the position shown in Fig. 2 the passage 48 is opened and live steam is admitted from the passage 19, through the check valve 49, into the cylinder 36 above the piston 34. The passage 50 is closed by the collar 68, hence the piston valve 34 is forced downwardly to the position shown in Fig. 2, cushioned by exhaust steam or air trapped in the cylinder 35 when the port 74 is closed by the piston 33.

The control valve 41 and the valve rod are at all times balanced so far as steam pressure is concerned, and hence the piston merely has to overcome inertia and friction of the piston rings in order to shift the valve. Substantially the same conditions exist in the distributing valve D and the steam merely has to overcome the friction of the piston rings and the inertia of the piston valve in shifting the valve from one position to the other.

The invention herein disclosed is an improvement on the apparatus disclosed and claimed in the lower Patent No. 1,363,333.

As in the patent referred to, the engine may be equipped with a manually operated valve 90, (see Fig. 2), by which the piston may be reversed between the ends of its stroke in order to relieve the pressure on the overrunning clutches and permit them to be reversed for driving the conveyors backwardly to release a clog. The construction of this valve and and the ports associated therewith is clearly disclosed in Figs. 2, 3 and 4 of the patent noted above and comprises a cylinder 91 in which the valve proper 90 is adapted to be reciprocated. The cylinder 91 is provided with an exhaust port 92 with a port 93 leading into the live steam conduit 19 and a port 94 leading to the inner end of the cylinder 36, as shown in Fig. 2. The valve 90 is hollow and is provided with ports 95 and 96 leading into the hollow portion of said valve from opposite sides thereof. The valve is shown in neutral position in Fig. 2.

When it is desired to move the distributor valve D in order to reverse the engine from the position shown in Fig. 2, the valve 90 is moved inwardly, thus bringing the ports 95 and 96 into register with the ports 94 and 92 respectively. The steam in the outer end of the cylinder 36 is then free to escape through the ports 94, 95, 96 and 92, whereby the steam in the valve D will move the same inwardly. If the valve 90 be moved outwardly, the ports 95 and 96 are brought into register with the ports 93 and 94, respectively, whereby live steam is permitted to enter the inner end of the cylinder 36. The yielding connection between the rod 54 and the valve 41 relieves the strain on the rod and materially increases the length of service it will endure.

We claim as our invention:

1. In a reciprocating engine, the combination of a cylinder, a piston mounted to reciprocate therein, steam ports to admit and exhaust steam, and means to control said ports including a balanced piston valve, a tubular seat for said valve having ports connecting it with the source of live steam on opposite sides of the piston valve; a valve rod connecting the piston valve and the piston, an unbalanced piston valve, a tubular seat for the unbalanced piston valve having a port between its ends constantly connected with a source of live steam, and other ports in communication with the steam ports of the cylinder, a port in the unbalanced piston valve in constant communication with the first mentioned port in its seat, and another port in said unbalanced piston valve communicating with the last mentioned ports in its valve seat for admitting live steam through said ports, a port connecting one end of said unbalanced piston valve seat with exhaust steam, an exhaust port connecting the other end of the unbalanced piston valve seat with the balanced piston valve seat, and an inlet port connecting the same end of the unbalanced piston valve with the balanced piston valve seat.

2. In a reciprocating engine, the combination of a cylinder, a piston mounted to reciprocate therein, steam ports to admit and exhaust steam, and means to control said ports, including a tubular valve seat having ports adjacent to its ends communicating with a source of live steam, a hollow piston valve in said seat and subjected to live steam at each end, a valve rod having a hollow head in the bore of the piston valve, a stud connected with the valve seat and projecting into the bore of the head, a flange on the valve receiving said stud at one side of the head and a second flange on the valve receiving the valve rod at the opposite side of the head.

3. In a reciprocating engine, the combination of a cylinder, a piston reciprocating therein, steam ports to admit and exhaust steam, and means for controlling said ports including a tubular valve seat in communication with a source of live steam at each end, a hollow piston valve in said seat, a plu-

rality of flanges extending inwardly from said piston valve, a valve rod connected with the piston and having a hollow head within the bore of the piston valve of less length than the distance between said flanges, the valve rod adjacent to one side of the head having a sliding fit with one of said flanges, a stud connecting with the valve seat having a sliding fit with the other flange and the hollow head of the valve rod.

4. In a reciprocating engine, the combination of a cylinder, a piston reciprocating therein, steam ports for admitting and exhausting steam, means for controlling said ports including a balanced piston valve, a tubular seat for the valve having ports adjacent to each end in communication with the source of steam and adapted to be closed by the valve as it approaches the corresponding end of its movement to form a cushion for the valve, a valve rod having a lost motion connection with the piston, and a cushion connection with the piston valve.

5. In a reciprocating engine, the combination of a cylinder, a piston reciprocating therein, ports to admit and exhaust steam, valve mechanism for controlling said ports including a valve seat having ports in communication with a source of steam, a valve for said seat, a valve rod connected to said piston and having a lost motion connection with said valve and means for admitting steam between the valve and rod connection for cushioning the initial movements of said rod in both directions.

In witness whereof we affix our signatures.

ALBERT R. CHALKER.
E. ARCHER TURNER.