(No Model.)

2 Sheets—Sheet 1.

J. T. SHANNON.

STRAP ATTACHING DEVICE.

No. 316,667. Patented Apr. 28, 1885.

Fig. 1.

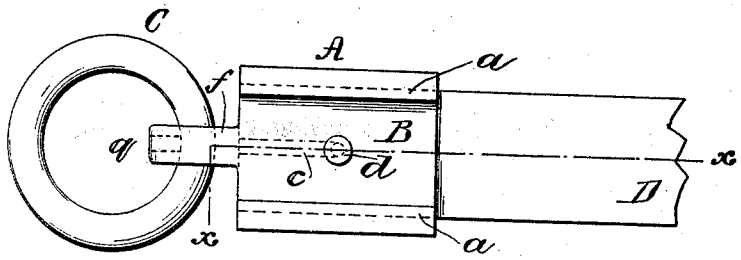

Fig. 2.

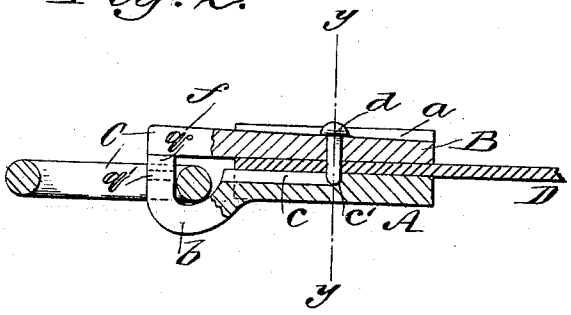

Fig. 3.

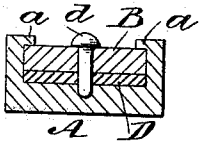

Fig. 8.

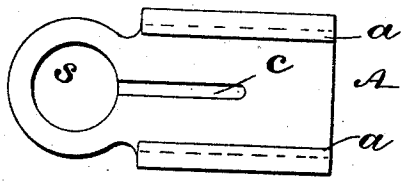

WITNESSES:

Johner C. Deemer

C. Sedgwick

INVENTOR:

J. T. Shannon

BY Munn & Co.

ATTORNEYS.

N. PETERS. Photo-Lithographer, Washington, D. C.

(No Model.) 2 Sheets—Sheet 2.

J. T. SHANNON.

STRAP ATTACHING DEVICE.

No. 316,667. Patented Apr. 28, 1885.

Fig. 4.

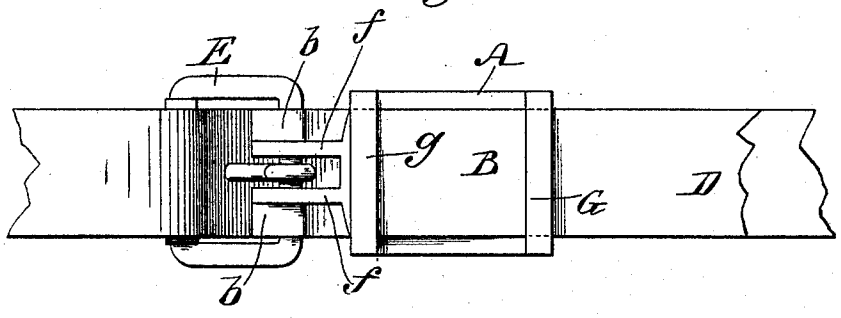

Fig. 5.

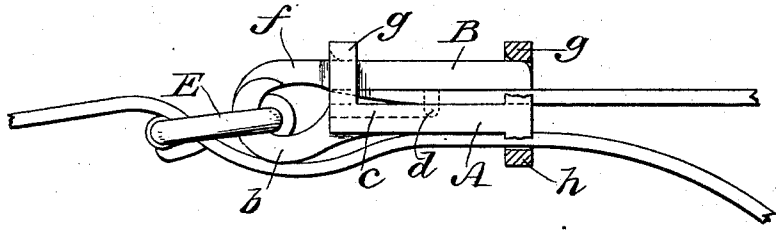

Fig. 6.

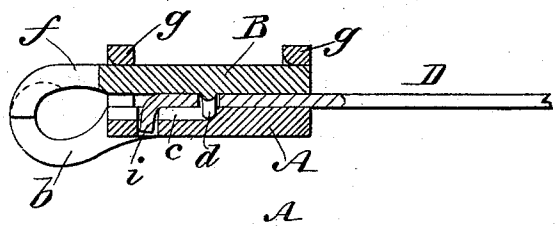

Fig. 7.

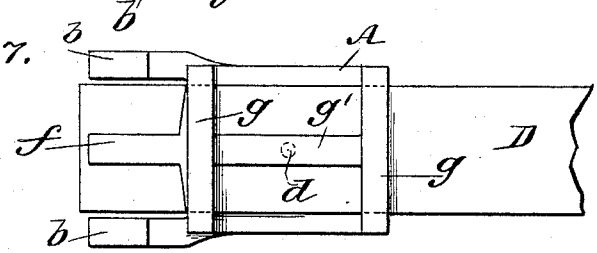

WITNESSES:

John H. Deemer

C. Sedgwick

INVENTOR:

J. T. Shannon

BY Munn & Co

ATTORNEYS.

N. PETERS, Photo-Lithographer, Washington, D. C.

UNITED STATES PATENT OFFICE.

JOHN T. SHANNON, OF CARLISLE, INDIANA.

STRAP-ATTACHING DEVICE.

SPECIFICATION forming part of Letters Patent No. 316,667, dated April 28, 1885.

Application filed February 2, 1885. (No model.)

To all whom it may concern:

Be it known that I, JOHN T. SHANNON, of Carlisle, in the county of Sullivan and State of Indiana, have invented a new and Improved Device for Attaching Straps to Rings, &c., of which the following is a full, clear, and exact description.

The invention is designed more particularly for use upon harness for attaching straps to rings, buckles, snap-hooks, &c., without the necessity of sewing the straps to the rings, &c., as is now the common practice.

My invention consists of a peculiar form of hook-plate having a slide-plate to which the strap is attached, the hook-plate being provided with one or more hooks adapted to receive the ring or other object, which is held in the hook by one or more projections upon the sliding plate.

The invention also consists of the construction, arrangement, and combination of parts, all as hereinafter described and claimed.

Reference is to be had to the accompanying drawings, forming part of this specification, in which similar letters of reference indicate corresponding parts in all the figures.

Figure 1 is a front elevation of my invention as it appears when used for attaching a strap to a ring. Fig. 2 is a sectional elevation of the same, taken on the line *x x* of Fig. 1. Fig. 3 is a transverse sectional elevation taken on the line *y y* of Fig. 2. Figs. 4 and 5 are respectively plan and edge views of a device formed with two hooks holding a buckle and with transverse bars for holding the sliding plate and strap held by the buckle, Fig. 6 showing the hook-plate provided with a slot to receive the strap. Fig. 7 is a plan view of the device made with three oppositely-arranged hooks; and Fig. 8 is a plan view of plate A, formed with a cockeye.

Referring to the first sheet of drawings, A represents the main hooked portion of my invention, and B represents the sliding plate. The part A is formed with the flanges *a a*, that form ways to receive and hold the edges of the plate B. The part A is formed at its forward end with the hook *b*, to receive the ring C or other object to which the strap D is to be attached; and the part A is grooved upon its inner surface, as shown at *c*, to receive the inner end of the pin *d*, that passes through the plate B and strap D and enters the groove *c*, as shown clearly in Figs. 1 and 2. The plate B is formed at its forward end with the projection *f*, that serves to close the hook *b*, for retaining the ring C or other object in the hook, as will be understood from Fig. 2. The groove *c* extends to about midway of the length of the plate A, so as to form a shoulder, *c'*, that acts as a stop to the pin *d*, so that the plate B cannot be drawn too far back in the flanges *a* of the main part A, and the flanges *a* are inclined or made wedging upon their under surfaces, as shown in Fig. 2, so that as the plate B is drawn backward it will be gradually pressed downward toward the inner surface of the main part A for grasping the strap D, so that it will be held with great firmness and security.

For attaching a strap to a ring or other object with my above-described invention, the plate B will first be removed from the main part A. Then the straps will be placed upon the pin *d*. Then the ring or other object to which the strap is to be attached will be placed in the hook *b*, and then the plate B will be placed under the flanges *a* and drawn backward until the pin *d* strikes the shoulder *c'*, where it will hold the plate and strap, and in this position the projection *f* stands over the hook *b*, as shown in Fig. 2, and thus holds the ring or other object in the hook *b*.

In case the ordinary buckle, E, is to be held by my invention, I may form the hook-plate A with two hooks *b* and the sliding plate B with a single or with two projections, plates, or fingers *f*, as shown clearly in Figs. 4 and 5; and in some cases, in place of the flanges *a*, (shown in Figs. 1, 2, and 3,) I shall form the plate A with the transverse bars *g g*, to hold the plate B, as shown in Figs. 4, 5, and 6; and in some cases I shall form the plate A with the loops or keeper *h*, for receiving and holding the straps or billet held by the buckle E, as shown in Fig. 5; and in some cases I shall form the part A with the slot *i*, for the inner end of the strap D to pass through, as shown in Fig. 6, so that the strap may be held more firmly than by the plain form of device. I

may form the part A with two corner hooks, and the part B with a single central hook, *f*, as shown in Fig. 1, the longitudinal central bar, *g'*, being provided with the pin *d*, to pass through the strap D and enter a slot made in the part A, as will be understood from said Fig. 7. In this manner it will be seen that the strap and the ring or buckle are securely united without severing the strap and without the use of rivets. It will be seen, also, that the device is cheap and practical, and that the strap may be easily detached from the device, and the device detached from the ring, which, under many circumstances, is advantageous and very convenient.

The hook *b* on plate A may be grooved at *q* for the purpose of allowing the pin *d* of plate B to pass; and the projection *f* may be made with a tongue, *q'*, to put in the groove, as indicated in dotted lines in Figs. 1 and 2; and the plate A may be formed with a cockeye, *c*, as shown in Fig. 8, in which case the plate B will have no projection *f*.

Having thus described my invention, what I claim as new, and desire to secure by Letters Patent, is—

1. The strap attachment herein shown and described, consisting of the hooked plate A and sliding plate B, arranged to hold the strap and to close the hook or hooks *b* of the plate A, substantially as herein described.

2. The plate A, grooved at *c* and flanged at *a*, and formed with the hook *b*, substantially as and for the purposes set forth.

3. The hooked plate A, formed with means to hold the plate B, and with the groove at *c*, in combination with the sliding plate B, pin *d*, and projection *f*, substantially as and for the purposes set forth.

4. The hooked plate A, formed with inclined flanges *a*, in combination with the sliding plate B, arranged for holding the strap and closing the hook, substantially as described.

5. The hooked plate A, formed with means to hold the plate B with the groove *c*, and with the slot *i*, to receive the end of the strap, in combination with the plate B, pin *d*, and projection *f*, substantially as described.

6. The hooked plate A, formed with means for holding the sliding plate B, and with the loop or keeper *h*, in combination with the plate B, pin *d*, and projection *f*, substantially as and for the purposes set forth.

JOHN T. SHANNON.

Witnesses:
E. L. SPEAKE,
R. L. JENKINS.