(19) DANMARK

(10) **DK/EP 2867541 T3**

Patent- og Varemærkestyrelsen

(12) Oversættelse af europæisk patentskrift

(51) Int.Cl.: ***F 16 B 2/24 (2006.01)*** ***F 24 J 2/46 (2006.01)***

(45) Oversættelsen bekendtgjort den: **2018-01-22**

(80) Dato for Den Europæiske Patentmyndigheds bekendtgørelse om meddelelse af patentet: **2017-11-08**

(86) Europæisk ansøgning nr.: **13734301.8**

(86) Europæisk indleveringsdag: **2013-06-27**

(87) Den europæiske ansøgnings publiceringsdag: **2015-05-06**

(86) International ansøgning nr.: **US2013048131**

(87) Internationalt publikationsnr.: **WO2014008087**

(30) Prioritet: **2012-07-02 US 201213539814**

(84) Designerede stater: **AL AT BE BG CH CY CZ DE DK EE ES FI FR GB GR HR HU IE IS IT LI LT LU LV MC MK MT NL NO PL PT RO RS SE SI SK SM TR**

(73) Patenthaver: **A. Raymond et Cie, 115, cours Berriat, 38000 Grenoble, Frankrig**

(72) Opfinder: **CHEUNG, brian C., 2981 25th Avenue, San Francisco, CA 94132, USA**
DUPONT, Luc, 130, Impasse des Jailleux, 38250 Lans-en-Vercors, Frankrig

(74) Fuldmægtig i Danmark: **Zacco Denmark A/S, Arne Jacobsens Allé 15, 2300 København S, Danmark**

(54) Benævnelse: **Fastgørelsesindretning af en fotovoltaisk ramme**

(56) Fremdragne publikationer:
DE-A1-102010 008 158
DE-B3-102007 042 484
DE-B3-102010 022 556
DE-U1-202009 004 746
US-A1- 2004 265 094

DESCRIPTION

BACKGROUND AND SUMMARY

[0001] The present disclosure relates generally to a fastener and more particularly to a photovoltaic frame fastener.

[0002] Traditionally, peripheral mounting frames holding solar or photovoltaic panels are mounted to a supporting structure on a building roof or on the land through use of threaded fasteners and multi-piece brackets. Exemplary traditional devices are disclosed in U.S. Patent No. 7,758,011 entitled "Adjustable Mounting Assembly for Standing Seam Panels" which issued to Haddock on July 20, 2010, and U.S. Patent No. 6,105,317 entitled "Mounting System For Installing an Array of Solar Battery Modules of a Panel-Like Configuration on a Roof" which issued to Tomiuchi et al. on August 22, 2000.

[0003] Another solar panel module fastener is disclosed in German Patent Publication No. 10 2010 022 556 by Klaus Hullmann et al. A fastener removal tool, useable from above the solar panels and having ends inserted into a rail opening, is also disclosed. While this fastener and tool are noteworthy advances in the industry, further improvements are desirable. DE 10 2007 042 484 discloses a device for securing an add-on to a support, which is not suitable for fastening a photovoltaic frame.

[0004] In accordance with the present invention, a photovoltaic frame fastener is provided according to claim 1 and a method of attaching the solar panel according to claim 12. In one aspect, a photovoltaic frame attachment apparatus includes a strut or rail defining a generally U-shaped channel and a snap-in clip or fastener. In another aspect, a single-piece fastener includes a strut-engaging surface, at least one flexible wing matable with an opening in a strut, a flexible tongue internally projecting in a central manner from a top wall of a body, and a slot adapted to receive a portion of a photovoltaic panel frame. In a further aspect, the central tongue has at least one formation for securing the frame in the slot. Yet another aspect of a photovoltaic frame fastener includes laterally projecting tabs abutting against a top of a strut. A bifurcated tongue is employed in an additional aspect. Moreover, a method of attaching a photovoltaic frame to an elongated structure is also provided.

[0005] The present photovoltaic frame fastener is advantageous over traditional devices. For example, the one-piece nature of the present fastener is inexpensive and fast to manufacture, install and remove. Furthermore, the present fastener is suitable for pre-assembly to the frame offsite or at a manufacturing plant, thereby improving quality and reducing assembly cost. Moreover, the present fastener advantageously hides the snap-in wing sections securing the frame and strut, thereby making theft and vandalism difficult. In an embodiment where a snap-in wing and frame receiving slot are directly below a flexible retaining tongue, the retention forces are direction in-line thereby advantageously reducing torsion on the fastener which

achieves a more secure attachment with less stress on the fastener, frame and solar panel, and requiring lower installation force. In the lateral tab embodiment, a more secure attachment is realized by reducing side-to-side and/or front-to-back tilting, while also preventing over-insertion of a fastener into a strut opening. Additional advantages and features of the present invention will become apparent from the following description and appended claims taken in conjunction with the accompanying drawings.

BRIEF DESCRIPTION OF THE DRAWINGS

[0006]

Figure 1 is a perspective view showing a photovoltaic frame fastener assembly mounted to a building roof;

Figure 2 is a perspective view showing a photovoltaic frame fastener assembly mounted to the ground;

Figure 3 is an exploded perspective view showing a first preferred embodiment of a photovoltaic frame fastener assembly;

Figure 4 is a perspective view showing the first embodiment photovoltaic frame fastener assembly;

Figure 5 is a perspective view showing the first embodiment photovoltaic frame fastener assembly, taken opposite that of Figure 4;

Figure 6 is a perspective view like that of Figure 5, showing the first embodiment photovoltaic frame fastener assembly, without a strut;

Figure 7 is a perspective view like that of Figure 6, showing the first embodiment photovoltaic frame fastener assembly, with an upper removal tool;

Figure 8 is a top elevational view showing the first embodiment photovoltaic frame fastener assembly, with the upper removal tool;

Figure 9 is a side elevational view showing one embodiment of a lower removal tool used with the photovoltaic frame fastener assembly;

Figure 10 is a top elevational view showing a second embodiment of the lower removal tool used with the photovoltaic frame fastener assembly;

Figure 11 is a side elevational view showing the lower removal tool of Figure 10;

Figure 12 is a top elevational view showing the lower removal tool engaging the first embodiment fastener;

Figure 13 is a perspective view showing the lower removal tool engaging the first embodiment

fastener;

Figure 14 is an end elevational view showing the lower removal tool initially contacting a second embodiment of a photovoltaic frame fastener;

Figure 15 is an end elevational view like that of Figure 14, showing the lower removal tool inwardly compressing wings of the first embodiment fastener;

Figure 16 is a side elevational view showing the second embodiment photovoltaic frame fastener assembly;

Figure 17 is an end elevational view showing the second embodiment photovoltaic frame fastener assembly;

Figure 18 is a perspective view showing the second embodiment photovoltaic frame fastener;

Figure 19 is a perspective view, taken opposite that of Figure 18, showing the second embodiment photovoltaic frame fastener;

Figure 20 is a top elevational view showing the second embodiment photovoltaic frame fastener;

Figure 21 is an end elevational view showing the second embodiment photovoltaic frame fastener;

Figure 22 is a side elevational view showing the second embodiment photovoltaic frame fastener;

Figure 23 is a cross-sectional view, taken along lines 23-23 of Figure 22, showing the second embodiment photovoltaic frame fastener;

Figure 24 is a top elevational view showing a flat blank used to create the second embodiment photovoltaic frame fastener;

Figure 25 is a top elevational view showing the upper and lower removal tools used with the second embodiment photovoltaic frame fastener assembly;

Figure 26 is a perspective view showing a third embodiment photovoltaic frame fastener assembly;

Figure 27 is an end elevational view showing the third embodiment photovoltaic frame fastener;

Figure 28 is a perspective view showing a third embodiment of a lower removal tool, used with the third embodiment photovoltaic frame fastener assembly;

Figure 29 is an end elevational view showing the third embodiment lower removal tool and third embodiment photovoltaic frame fastener assembly in a fully compressed condition; and

Figure 30 is a perspective view showing the third embodiment lower removal tool and first

embodiment fastener.

DETAILED DESCRIPTION

[0007] Referring to Figures 1-3, a first embodiment of a photovoltaic frame fastener assembly 10 includes elongated and rigid rails or struts 12, solar or photovoltaic panel modules 14, and fasteners 16. Struts 12 are mounted to vertical legs 18 attached to land or ground 20 in one configuration. In another configuration, struts 12 are bolted onto a roof clamp or other structure on a roof or side of a building 22. Each photovoltaic module 14 includes a chemically coated glass photovoltaic panel 24 and an adhesively attached, peripheral metallic frame 26. Glass photovoltaic panel 24 and metallic frame 26 are provided as a pre-assembled unit or may be provided as separate units to the installation site.

[0008] As best shown in Figures 3-5 and 8, strut 12 has a uniform and generally U-shaped cross-section as defined by upstanding sidewalls 30 joined by a bottom wall 32. A reverse-turned wall 34 extends from a top end of each sidewall 30 and terminates in a downwardly directed edge 36. Downwardly directed edge 36 provides a folded-over region of upstanding sidewalls 30 and as detailed below provide attachment points for wings of fasteners 16. An elongated channel or opening 38 is defined between reverse turn walls 34. Optional mounting holes 40 are provided in bottom wall 32 to allow for securing of strut 12 to a building attachment, bolt upwardly projecting from a standing seam roof clamp, or ground-based support. Strut 12 is stamped or rolled from aluminum or steel.

[0009] Referring now to Figures 3-6, fastener 16 includes a body 50, a pair of flexible wings 52, and four rigid tabs 54. Body 50 includes a top wall 56, a pair of spaced apart side walls 58 and tapered lead-in walls 60. The walls of body 50 and wings 52 define peripheral edges 62 that allow for hollow open access at ends thereof. Furthermore, lead-in walls 60 cross and overlap each other adjacent distal edges thereof. A pair of aligned and elongated openings or slots 68 are disposed in an upper area of body 50 above at least some of tabs 54. Each slot 68 has an openly accessible end and they both receive a flat segment of metallic frame 26 inserted therein to secure photovoltaic module 14 to fastener 16.

[0010] A flexible tongue member 80 is downwardly and diagonally bent from an inside of top wall 56 of fastener 16. A distal edge of tongue 80 includes multiple, preferably two, generally pointed formations 82 separated by a recess or valley 84. Formations 82 gouge or score into a top surface of frame 26 to secure frame 26 within slots 68 of fastener 16. The diagonal and flexible nature of tongue 80 allows for low effort installation of frame 26 into slots 68 but significantly greater (at least four times) removal force. Tongue 80 is centrally inboard of all peripheral fastener edges 62 adjacent to a central hole 86 in top wall 56.

[0011] An inwardly curved finger 90 upwardly projects from a top section of each wing 52.

Finger 90 has a smaller width (the width being in the elongated direction of strut 12) than does the adjacent wing 52. Each wing 52 further has an offset angled step 92 at an apex, defining a thickness dimension of the collective wings. Barbs or outwardly and localized arms 94 are located on the lateral edges adjacent each step 92 to more securly engage downturned edges 36 of strut.

[0012] Reference should now be made to Figures 16-24 which show another embodiment of a photovoltaic frame fastener 100 of the present invention. Fastener 100 includes a top wall 102, side walls 104 and tapered lead-in walls 106 like with the prior embodiment fastener 16. Furthermore, a frame receiving slot 108 is located within each side wall 104 and a flexible and bifurcated tongue 110 is downwardly bent from top wall 102 like with the prior embodiment. At least two, and more preferably four, rigid tabs 112 outwardly extend in a generally parallel manner to each other and perpendicular from each associated side wall 104. Tabs 112, like with the prior embodiment, abut against an outside surface of strut 12 adjacent the opening therein, to deter tilting of the fastener and also to prevent over-insertion of the fastener too far into the strut during installation. Each tab 112 has a greater longitudinal dimension a than a width dimension *b,* in order to increase the longitudinal rigidity and stiffness of the tab.

[0013] Different than the prior embodiment, the present fastener 100 has a pair of flexible wings 120 which are outwardly bent from side walls 104 adjacent lead-in walls 106, but longitudinally directly below slots 108. This alignment advantageously reduces undesired torque imparted on fastener 100 due to a lateral offset of slots 68 (see Figure 4) versus wings 52 of the prior embodiment fastener. Additionally, the present fastener 100 is more compact and the wings 120 are better hidden by the attached solar panel module and frame 26 thereabove. For example, a longitudinal dimension *L* is greater than both a width *W* and a total nominal thickness *T,* for this embodiment.

[0014] A finger 126 centrally extends from an upper edge of each wing 120 generally between a pair of adjacent tabs 112. Each finger 126 has an outwardly curved distal end opposite the corresponding step 128 of each wing. Moreover, finger 126 has a smaller lateral width as compared to adjacent wing 120 in order to allow for material size savings of a sheet metal blank 130 from which fastener 100 is stamped and bent as a single, metallic piece. A stiffening rib or bead 132 is also provided along a generally flat outwardly angled section of each wing 120 to provide compressive strength to resist inadvertent disassembly from strut 12 after the wings have been snapped into engagement with return edge of the strut during assembly. Fastener 100 resists at least 100 pounds of pullout force from strut 12 without destruction.

[0015] When fully installed, the solar panel module hides a majority of each fastener 16 and 100. This feature advantageously deters theft of the solar panel module 14 by making it less clear to a casual observer that compression together of the wings will allow detachment of the fastener from strut 12. Fasteners 16 and 100 are preferably stamped from a Magni coated and austemper heat treated spring steel of type SAE 1050-1065, with a finish hardness of 44-51 Rc, and a sheet thickness of 1.0 nm, but alternately may be stamped from stainless steel.

[0016] Figures 7 and 8 illustrate an upper removal tool 150 used to disengage photovoltaic frame 26 from either fastener 16 or 100. Exemplary fastener 16 will be referenced hereinafter although it should be appreciated that any of the removal tools can be used for either of the fasteners.

[0017] Upper removal tool 150 is preferably a screwdriver having an enlarged handle 152, an enlongated rigid shaft 154 and a flat blade 154. The construction or service person initially inserts screwdriver tool 150 in a linear and lateral direction into the hollow opening of fastener 16 between the side walls and below the glass solar module. This may be either done from below the assembly as space allows, or after the fastener is removed from the strut as will be described in further detail hereinafter. Blade 154 is linearly and horizontally inserted between valley 84 (see Figure 6) and the segment of frame 26 that is within slots 68. Thereafter, the construction person rotates tool 150 by either linearly pushing down to the position 150' or by rotating the tool about is centerline, thereby providing leverage to push the tongue 80 and associated pointed formations 82 upwardly and away from the adjacent segment of frame 26. Concurrently or subsequently, the construction person linearly pulls frame 26 out of slots 68 since tongue 80 is no longer deterring removal thereof. The torsion upon tool 150 will then cease and the tool removed. It should be appreciated that other lever type tools can be employed as long as they can impart the same tongue flexure during frame removal, preferably without over-flexing or damaging either the fastener or frame, so that they can be reused if desired.

[0018] A first embodiment of a lower removal tool 170 is shown in Figure 9. This tool has a pair of generally C-shaped jaws 172 which are spaced apart from each other by at least three inches to create a large central void 174. The proximal ends of jaws 172 are coupled together by way of one or more pivots 176. An opposite distal end of each jaw 172 has a generally flattened and straight tip 178. Furthermore, the thickness *C* of each tip 178 is less than one-quarter of that for the nominal central portion of each jaw 172.

[0019] A primary handle 192 is integrally formed as part of one jaw 172. A separate auxiliary handle 194 is coupled to the other jaw 172 via one or more pivots 196. A camming link 198 pivotally couples the handles together as does a biasing spring 200. An adjustment screw 202 is threadably received within primary handle 192 for setting the adjusted position of camming link 198. Additionally, a release handle 204 is pivotally coupled to handle 194 for releasing a clamped and locked state of tool 170. The handle and locking mechanism work in accordance with U.S. Patent No. 8,056,451 entitled "Locking Pliers" which issued to Chervenak et al. on November 15, 2011, which is incorporated by reference herein. This tool embodiment can be used from below the fastener and strut as further discussed hereinafter, or is well suited for engaging laterally offset wings 52 (see Figure 3) of fastener 16 from above and between adjacent photovoltaic panel modules 14.

[0020] A second embodiment lower removal tool 220 is shown in Figures 10 and 11. This tool has a pair of spaced apart jaws 222 and handles 224, 226 and 228, like that of the prior embodiment. A locking, adjustment and release mechanism are also similarly provided.

However, tips 230 are downwardly stepped from an upper surface 232 of each jaw, which is opposite that of the prior embodiment. Either embodiment lower tool 170 or 220 can be used for removal of the fastener, but only the second embodiment lower tool 220 will be discussed hereinafter by way of example.

[0021] The construction or service person initially approaches fastener 100 (by way of non-limiting example) from below strut 12. The person thereafter essentially surrounds a cross-section of strut 12 by jaws 222 as tips 230 make initial contact with fingers 126 (as can best be observed in Figures 14 and 16) accessible above the upper surface of strut 12. Next, the construction person fully squeezes together handles 224 and 226 such that the camming link will put the tool in a locking and fully clamped position, which causes tips 230 of tool 220 to be in their fully compressed position (as adjusted by adjustment screw 240). Consequently, tips 230 inwardly compress fingers 126 and the attached wings 120 toward each other and the fastener centerline, such that the wings can thereafter be longitudinally and linearly pulled free of strut 12 through the upper opening therein while staying engaged by tool 220. After full removal, release handle 228 is pulled toward auxiliary handle 226 to release the locking mechanism and thereby disengage tool 220 from fastener 100.

[0022] It is noteworthy that no portion of the tool needs to be inserted into the strut for fastener removal. Furthermore, the locking and unlocking feature of lower removal tool 220 is also advantageous by allowing for hands-free wing compression after the tool clamping position has been set; this is especially advantageous when many of these tools simultaneously engage and compress multiple fasteners for the same solar panel module whereafter the construction person can then use both of this hands for pulling up on the frame to remove all of the fasteners from the strut at the same time. Lower removal tool 220 is designed to not damage the fasteners such that they can be repeatedly reused. Moreover, the lower removal tools are preferably cast or stamped from steel, although other materials can be employed.

[0023] Referring now to Figures 26-29, a third embodiment of a lower removal tool 250 is used to remove a snap-in photovoltaic frame grounding clip 252. Grounding clip 252 includes a pair of spaced apart clamps 254 and 256, an upper bridge 258 and a mounting section 260. Each clamp has a generally C-shape, thereby creating an openly accessible receptacle therebetween. Furthermore, a lead-in wall 262 upwardly and outwardly angles away from each clamp to ease insertion of a flat lateral flange segment of frame 26 therein during assembly. If used for grounding, a pair of pointed barbs 264 internally project from each upper section of clamps 254 and 256. Each barb 264 cuts into and gouges the adjacent surface of frame 26 to scrape off the anodized coating thereat. This provides multiple satisfactory electrical grounding paths between the base material of the frame and the clip. This can be achieved by the simple linear insertion of the clamps of the clip onto the flange of the frame without the need for rotation or a threaded attachment. Alternately, the same fastener clip 252 can be used in a non-electrical grounding manner if barbs 264 are omitted.

[0024] Mounting section 260 includes side walls 270 and flexible wings 272. Each wing 272 is

flexibly attached adjacent an inwardly tapered distal end 274 and is linearly snap-fit into the opening in strut 12 when installed. A finger 276 projects upwardly from each wing proud of strut. Furthermore, an offset step is located along a longitudinal length of each wing located closer to the finger than the distal end.

[0025] This embodiment removal tool 250 has a pair of generally cylindrical and longitudinally elongated handles 300 rotatably coupled together at pivot 302. A hinge 304 couples each handle 300 to a corresponding jaw 306. A flat and longitudinally thinner tip 310 laterally projects inward from each end of jaw 306 for contacting against and compressing upstanding fingers 276 from the expanded strut-engaging position to an inwardly compressed position 276' whereafter the construction person can linearly remove fastener 252 from strut 12. Since jaws 306 are stamped from 1018 steel, a twist 312 is stamped between tips 310 and jaws 306. Lower removal tool 250 has a scissor handle and pivot arrangement to move jaws 306, but without a locking feature.

[0026] As illustrated in Figure 30, this third embodiment lower removal tool 250 is also well suited for top down access within a gap between a pair of installed solar modules, including frames 26. Tips 310 then contact against and compress fingers 90 and their associated wings of the first embodiment fastener 100. This approach is easiest for a roof-mounted assembly.

[0027] The foregoing description of the embodiments has been provided for purposes of illustration and description.

REFERENCES CITED IN THE DESCRIPTION

This list of references cited by the applicant is for the reader's convenience only. It does not form part of the European patent document. Even though great care has been taken in compiling the references, errors or omissions cannot be excluded and the EPO disclaims all liability in this regard.

Patent documents cited in the description

- US7758011B [0002]
- US6105317A [0002]
- DE102010022556 [0003]
- DE102007042484 [0003]
- US8056451B [0019]

Patentkrav

1. Fastgørelsesindretning (10) af en fotovoltaisk ramme omfattende et fastgørelseselement (16, 100) i ét stykke til at forbinde en fotovoltaisk ramme (26) med en aflang støtte (12), hvor fastgørelseselementet (16, 100) endvidere omfatter:
et legeme (50), der indbefatter et par fotovoltaiske rammemodtagende spalter (68, 108), der er anbragt med indbyrdes afstand, hvor hver spalte har en åbent tilgængelig ende og er indrettet til at modtage et segment af en fotovoltaisk ramme (26), der er indført deri, til fastgørelse af den fotovoltaiske ramme (26) til fastgørelseselementet (16, 100);
et par fleksible vinger (52, 120, 272), der går i indgreb med støtten, og som er koblet til legemet, hvor hver vinge (52, 120, 272) indbefatter en finger (90, 126, 276) med mindre bredde, der strækker sig fra en øvre kant deraf, hvor støtten omfatter fastgørelsespunkter til de fleksible vinger (52, 120, 272); og
en fleksibel rammekontaktende tunge (80, 110), der er bukket nedad og diagonalt og indvendigt og centralt rager frem fra en topoverflade (56, 102) af legemet, hvor mindst en i det væsentlige spids kant af tungen peger væk fra topoverfladen af legemet, hvor tungens (80, 110) spidse kant er beregnet til at lave et mærke i rammen (26) til fastgørelse af rammen (26) i fastgørelseselementets (16) spalter (68, 108).

2. Indretning ifølge krav 1, endvidere omfattende stive flapper (54, 112), der lateralt rager frem fra modsat beliggende sidevægge (58, 104) af legemet (50).

3. Indretning ifølge krav 2, endvidere omfattende en aflang strukturel støtte (12), der indbefatter en åbning (38), vingerne (52, 120), der går i snapindgreb i åbningen, og flapperne (54, 112), der ligger an mod overflader, som støder op til åbningen (38), for at forhindre over-indføring af fastgørelseselementet (16, 100) i støtten (12).

4. Indretning ifølge krav 1, endvidere omfattende en fotovoltaisk ramme (26).

5. Indretning ifølge krav 1, hvor tungens (80, 110) kant indbefatter to i det væsentlige spidse formationer (82), der er adskilt af en central fordybning

(84), tungen (80, 110) i det væsentlige er lige og orienteret diagonalt i forhold til topoverfladen (56, 102) af legemet.

6. Indretning ifølge krav 1, endvidere omfattende:
en aflang og strukturel støtte (12), hvor støtten har en i det væsentlige U-formet visning fra enden, hvor de indvendige overflader er vægge (34), der er vendt om;
et fotovoltaisk glaspanel (24), der er monteret på en fotovoltaisk ramme (26), hvor panelet og rammen gemmer størstedelen af fastgørelseselementet (16) fra en retning udefra, når fastgørelseselementet (16) er fuldstændig fastgjort til støtten (12); og
vingerne (52, 120), der ligger aftageligt an mod kanterne af væggene (34), der er vendt om.

7. Indretning ifølge krav 1, hvor vingerne (52) er forskudt i forhold til fastgørelseselementets legeme (50) langs en forlængelsesretning af en strukturel støtte (12), endvidere omfattende en finger (90), der er opretstående fra vingerne (52) og har en mindre bredde end vingerne.

8. Indretning ifølge krav 1, hvor vingerne (120) er direkte under spalterne (108) og tungen (110), og fastgørelseselementet (100) har en i det væsentlige vertikal længde, der er større end dets bredde og tykkelse.

9. Indretning ifølge krav 1, hvor tungen (80, 110) indad har fuldstændig afstand til alle udvendige kanter af fastgørelseselementets (16, 100) legeme (50).

10. Indretning ifølge krav 1, hvor støtten (12) er monteret på et bygningstag.

11. Indretning ifølge krav 1, hvor hele fastgørelseselementet (16, 100) er en metalplade, der er bukket én gang.

12. Fremgangsmåde til fastgørelse af en solpanelramme (26) til en stiv skinne (12), hvilken fremgangsmåde omfatter:
(a) lineært at presse et plademetal-fastgørelseselement (16, 100) i ét stykke på en del af solpanelrammen (26) ved lineært at indføre rammen (26) i spal-

ter (68, 108) af fastgørelseselementet (16, 100), hvor hver spalte har en åbent tilgængelig ende;
(b) at sammenpresse fremspring (82) af en tunge (80, 110) af fastgørelseselementet (16, 100) med indbyrdes afstand i delen af rammen (26) til fastgørelse af rammen til fastgørelseselementet;
(c) fleksibelt at lade vinger (52, 120) af fastgørelseselementet (16, 100) gå i snapindgreb i den stive skinne (12); og
(d) at lægge flapper (54,112), der udadtil rager frem fra fastgørelseselementet (16, 100), an mod en udvendig overflade af den stive skinne (12).

13. Fremgangsmåde ifølge krav 12, endvidere omfattende at sætte fastgørelseselementet (16, 100) sammen med rammen (26) på forhånd eksternt på fabrikken.

14. Fremgangsmåde ifølge krav 12, endvidere omfattende at sætte fastgørelseselementet (16, 100) sammen med rammen (26) på forhånd før fastgørelse af fastgørelseselementet (16, 100) til skinnen (12).

15. Fremgangsmåde ifølge krav 12, endvidere omfattende lineært at indføre rammen (26) i aflange spalter (68, 108) af fastgørelseselementet (16, 100) og også i indgreb med tungens (80, 110) fremspring (82) i en enkelt lineær bevægelse.

DRAWINGS

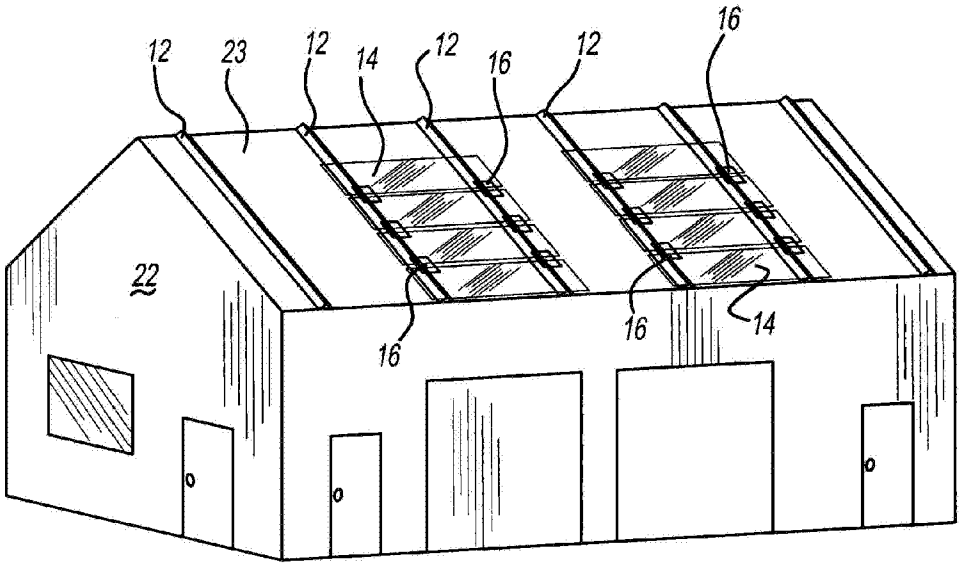

FIG - 1

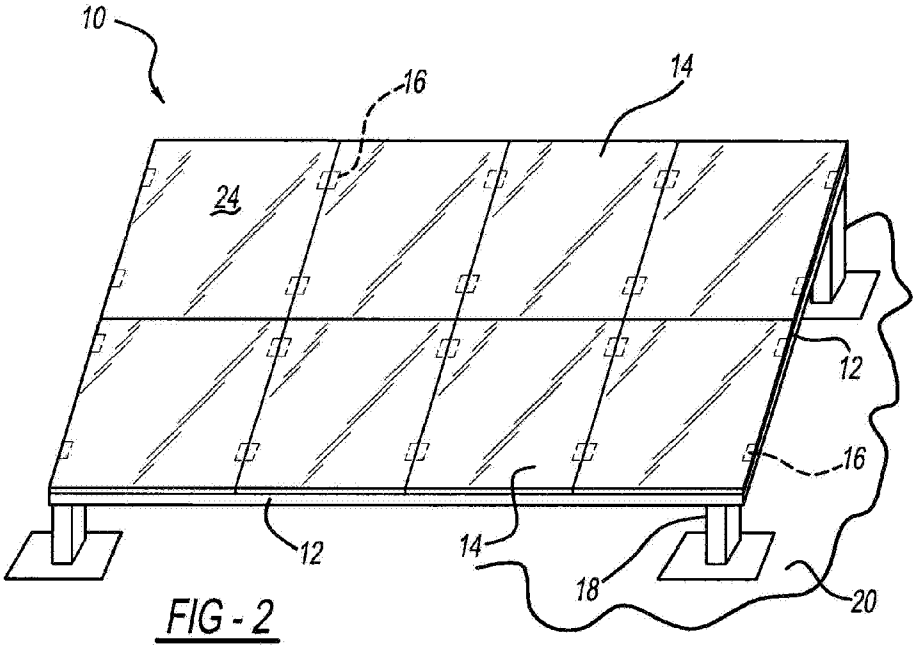

FIG - 2

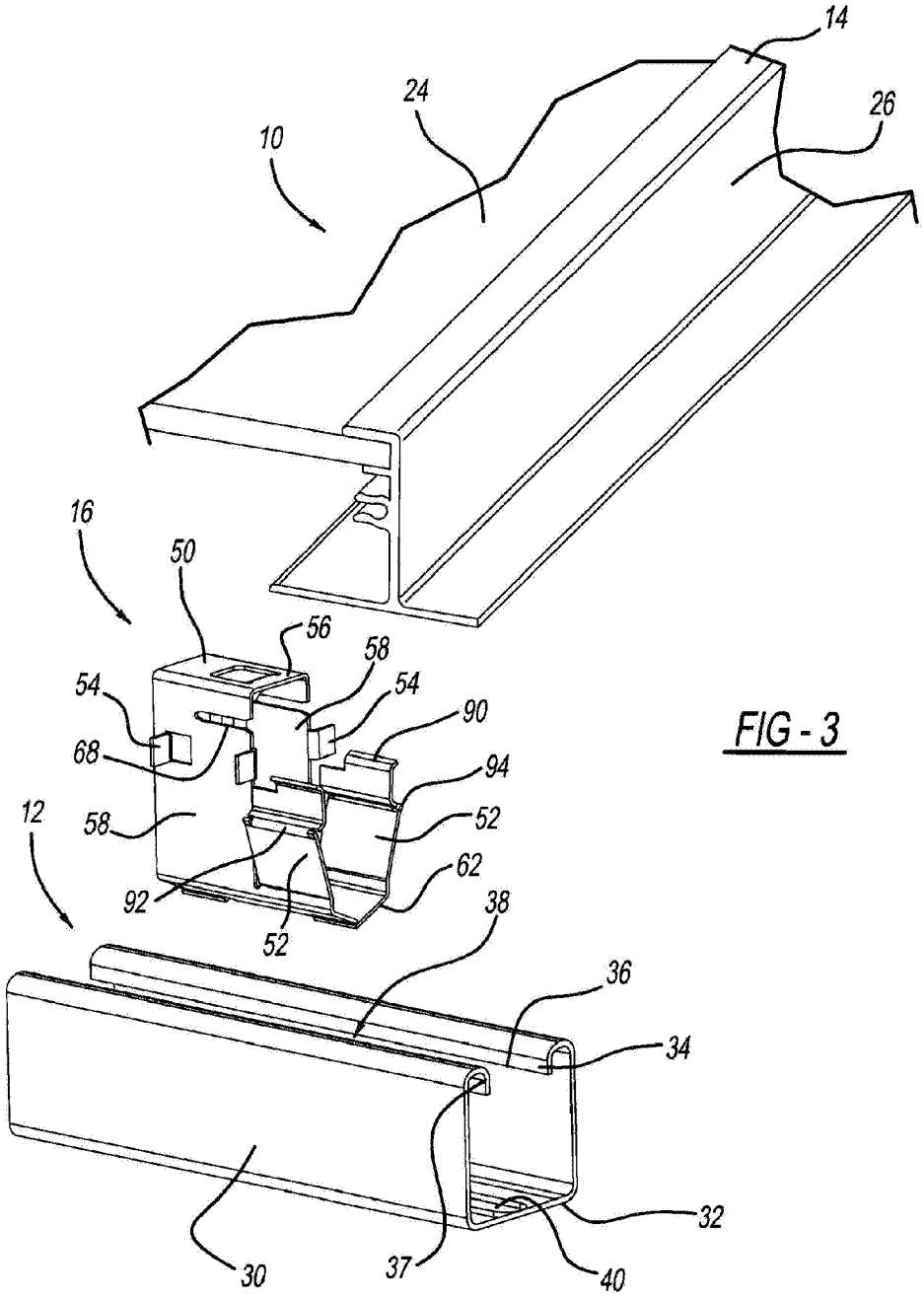
14
24
26
10
16
50
56
58
54
54
90
68
94
12
58
52
62
92
52
38
36
34
32
30
37
40

FIG - 3

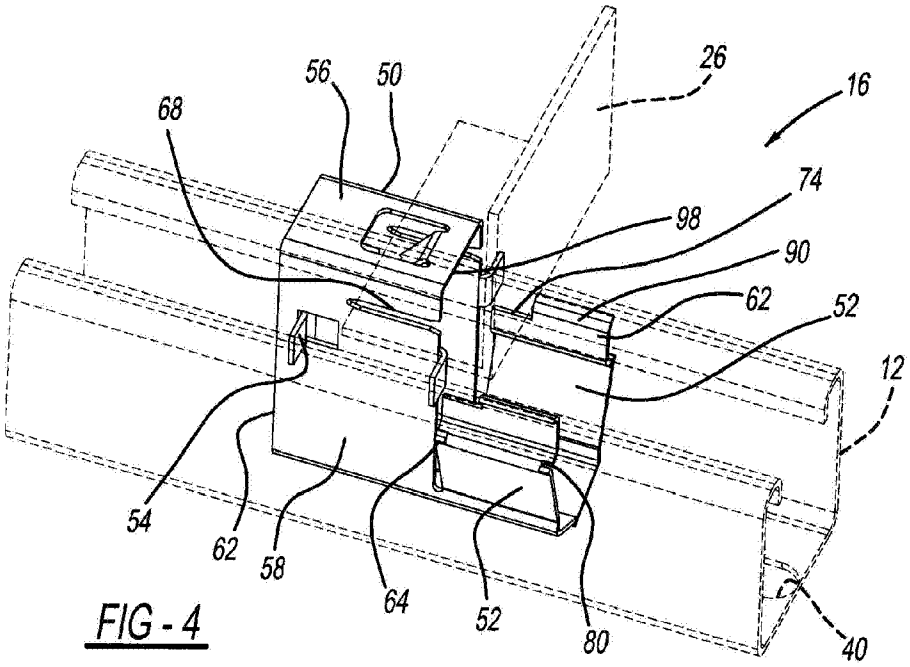
56
50
26
16
68
74
98
90
62
52
12
54
62
58
64
52
80
40

FIG - 4

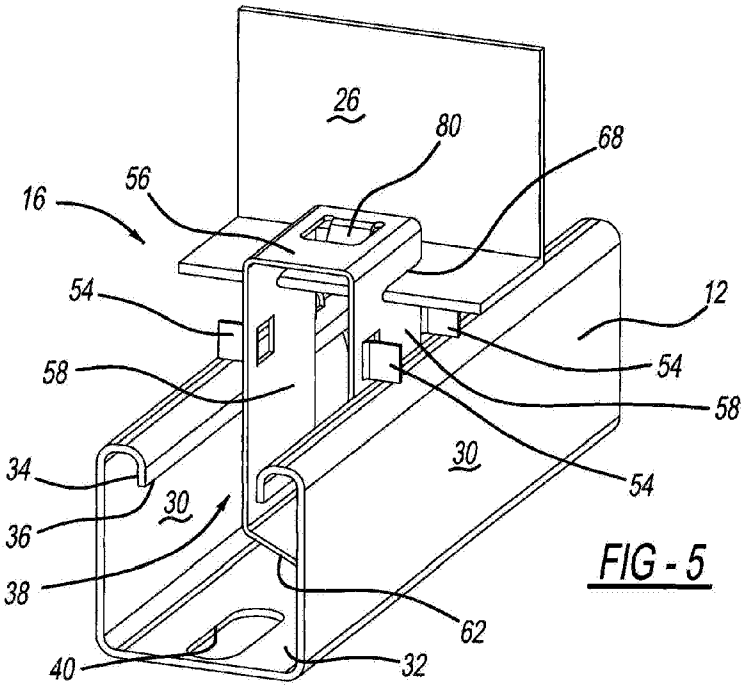
26
80
68
16
56
54
12
54
58
58
30
34
54
30
36
38
62
40
32

FIG - 5

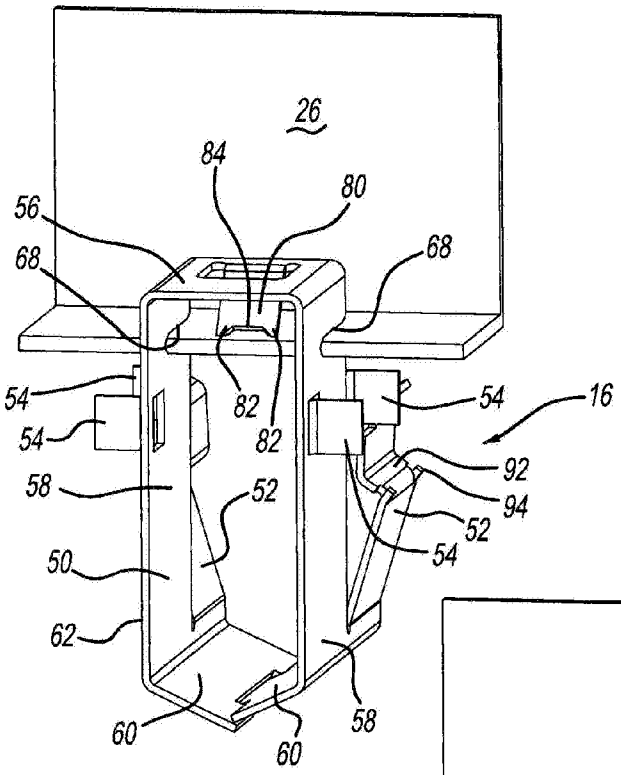
26
84
80
56
68
68
54
54
82
82
54
16
92
94
58
52
52
54
50
62
60
60
58

FIG - 6

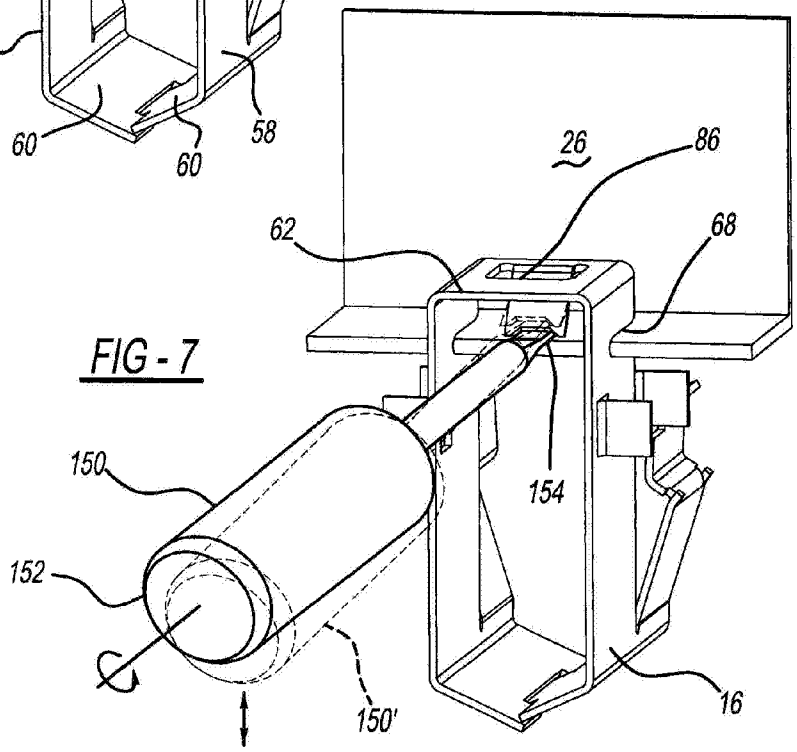
26
86
62
68
154
150
152
150'
16

FIG - 7

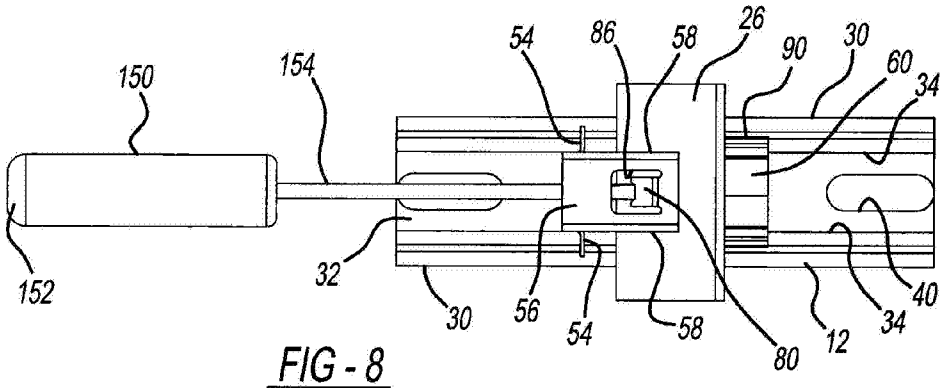
150
154
54
86
58
26
90
30
60
34
152
32
30
56
54
58
80
12
34
40

FIG - 8

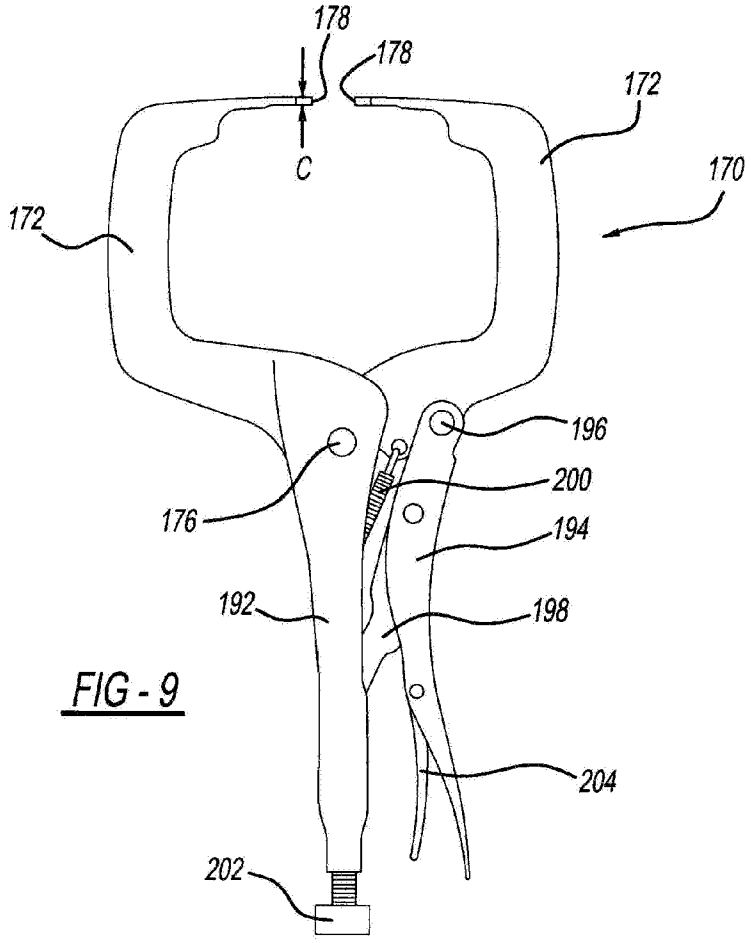
178
178
C
172
170
172
196
200
176
194
192
198
204
202

FIG - 9

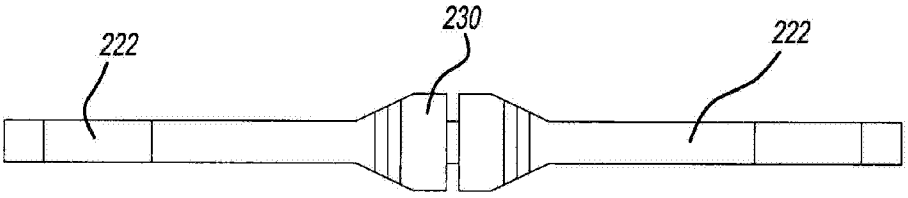

FIG - 10

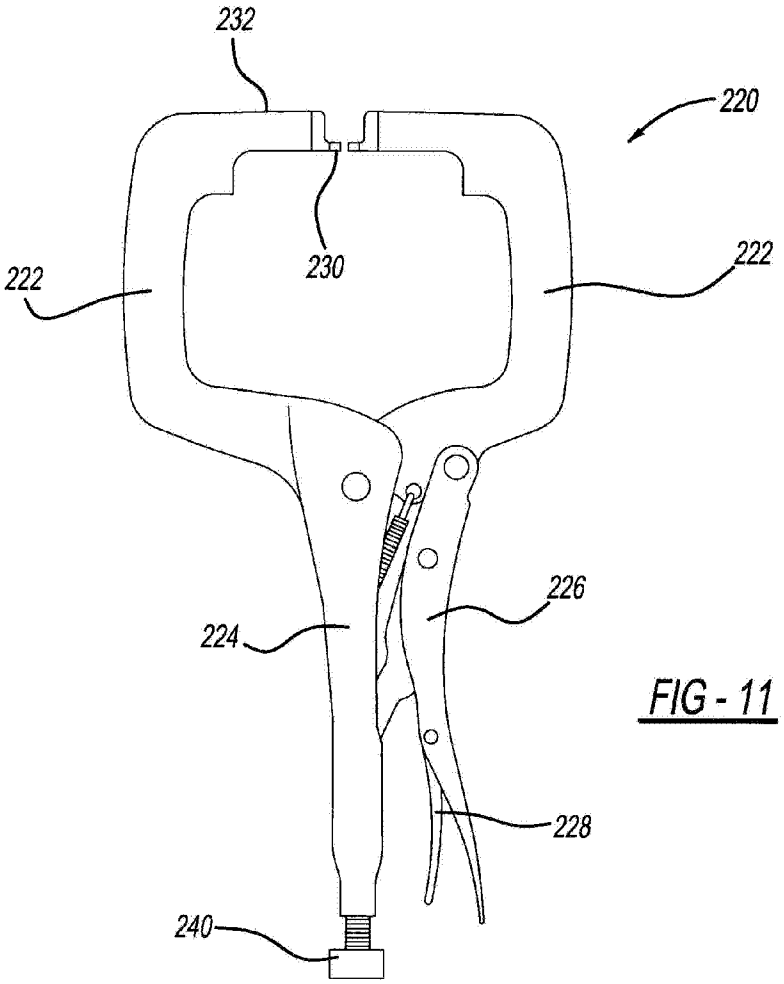

FIG - 11

FIG - 12

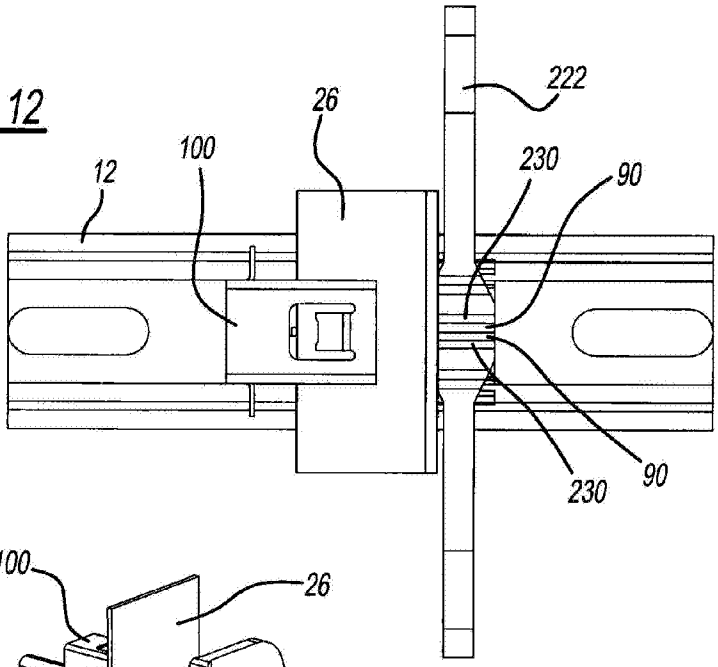

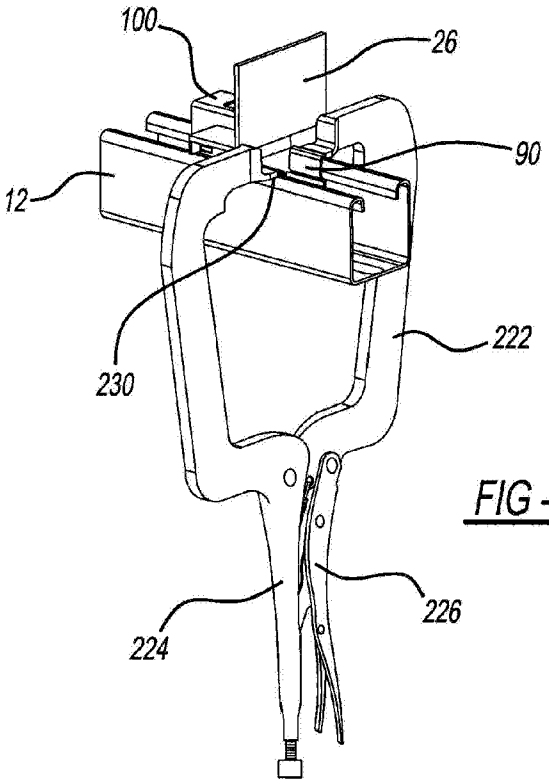

FIG - 13

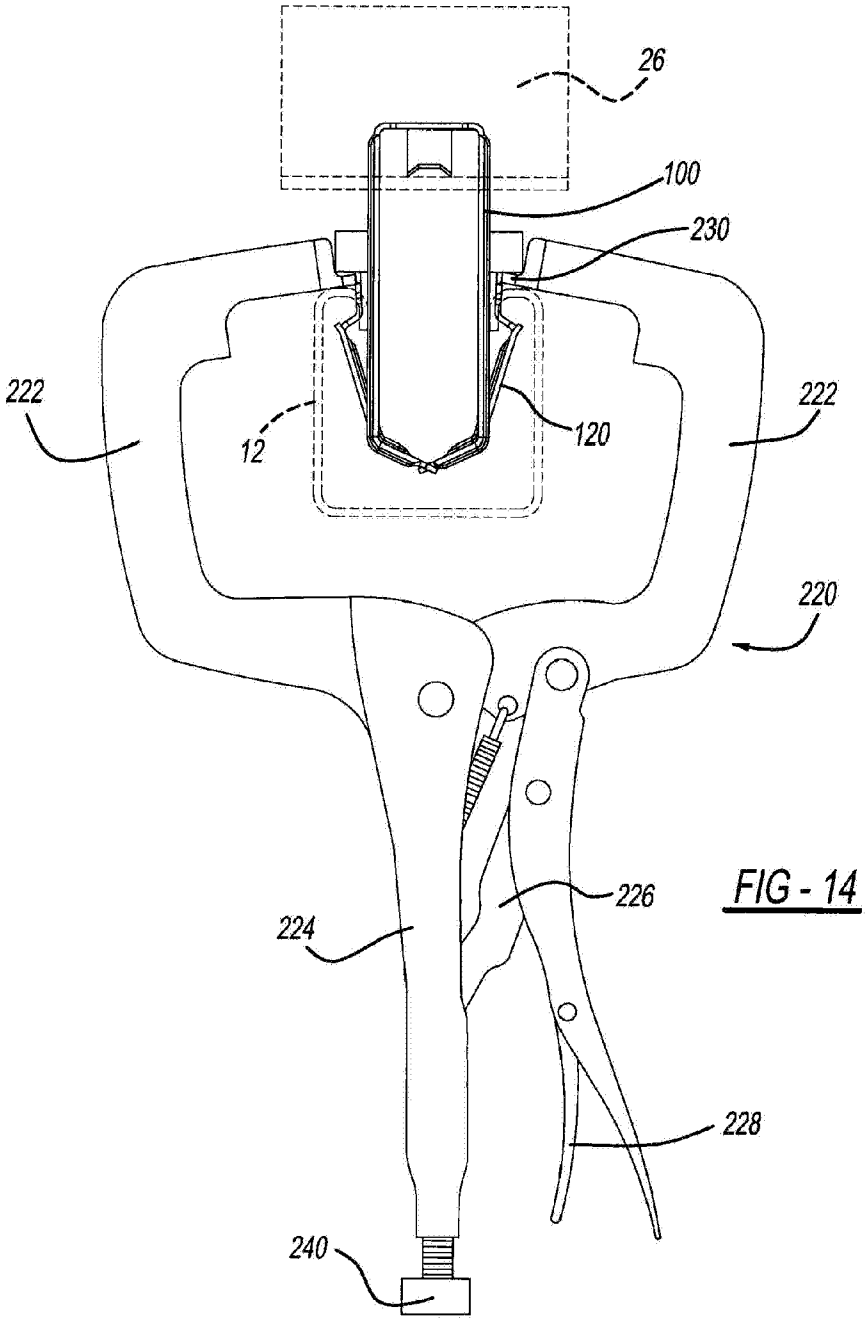

FIG - 14

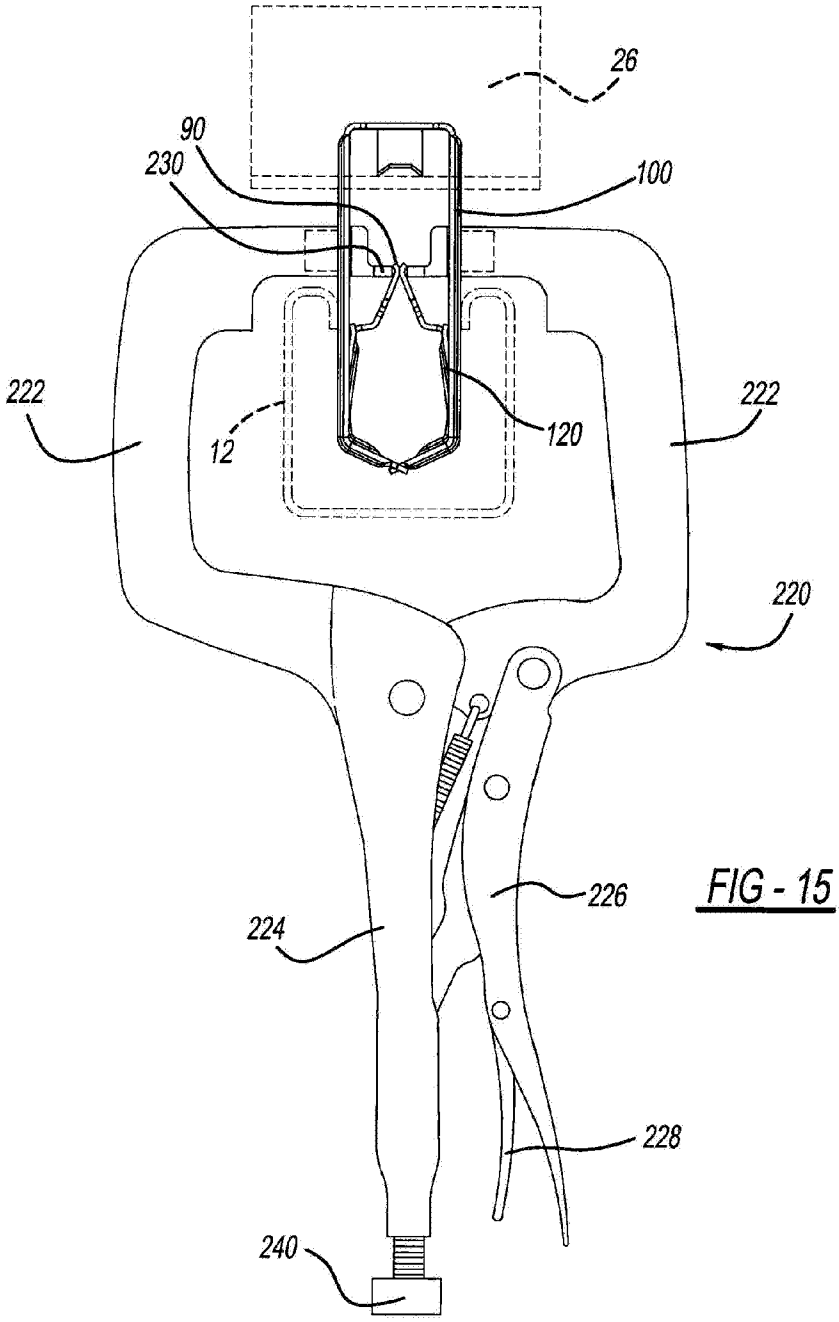

FIG - 15

FIG - 16

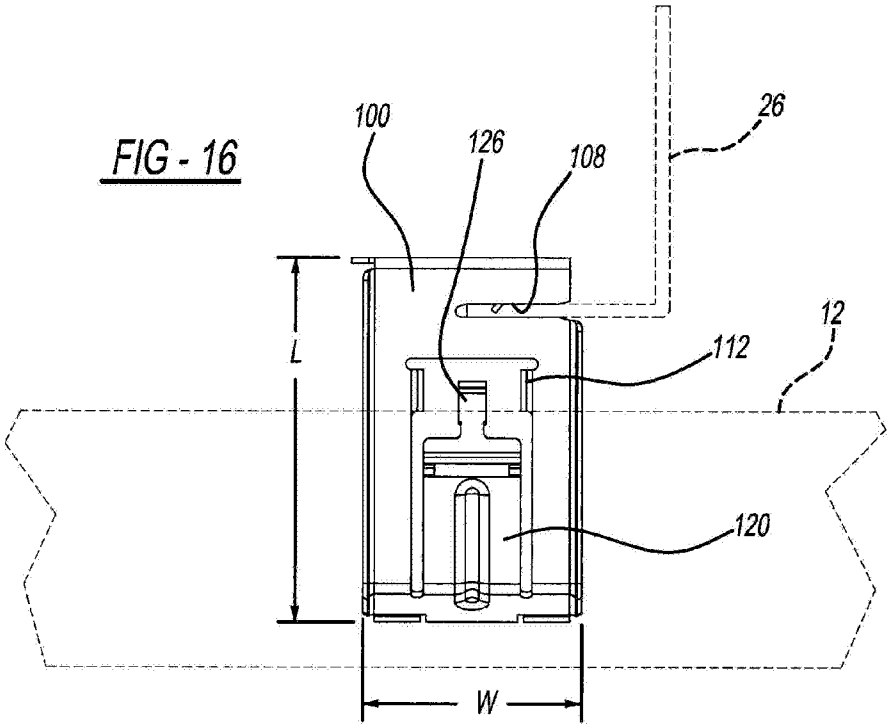

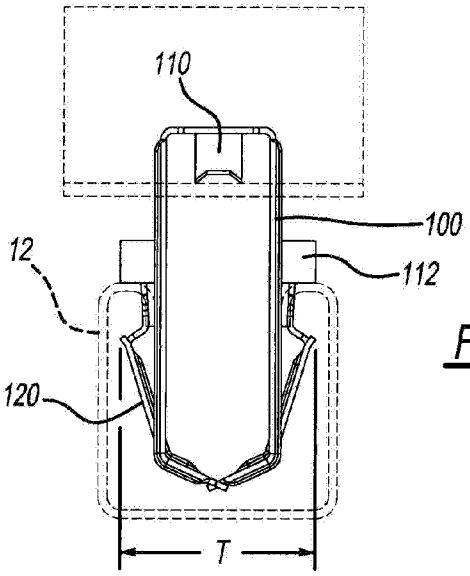

FIG - 17

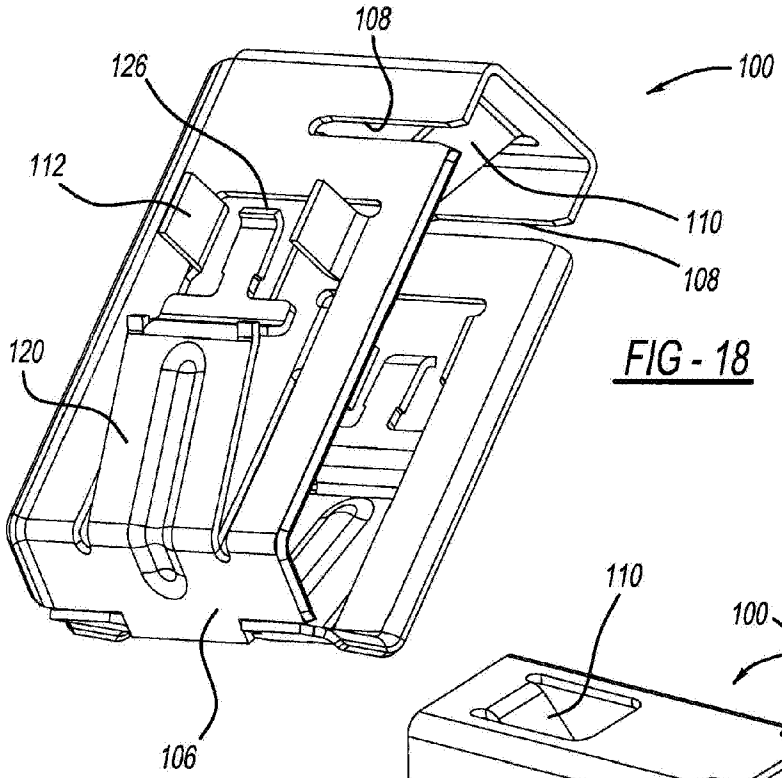
108
126
100
112
110
108
120
106

FIG - 18

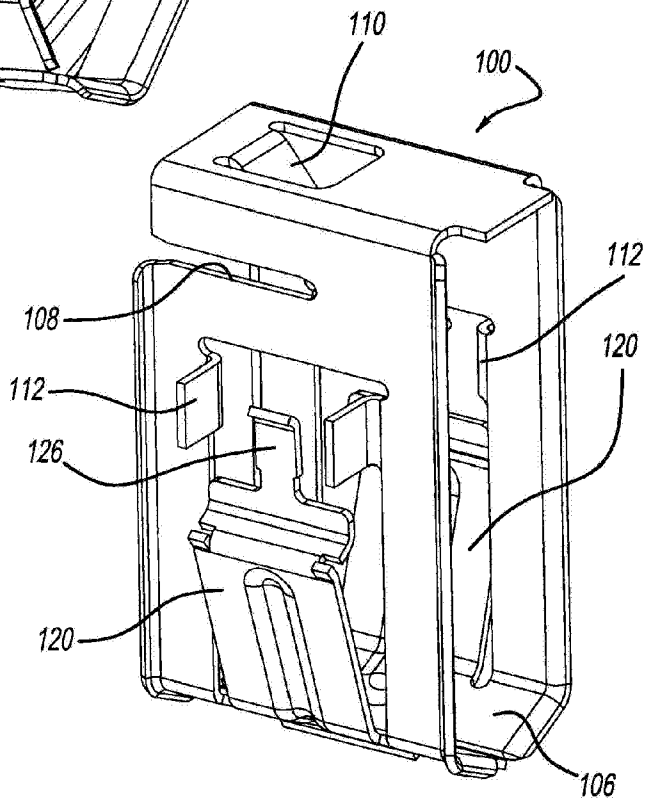
110
100
112
108
120
112
126
120
106

FIG - 19

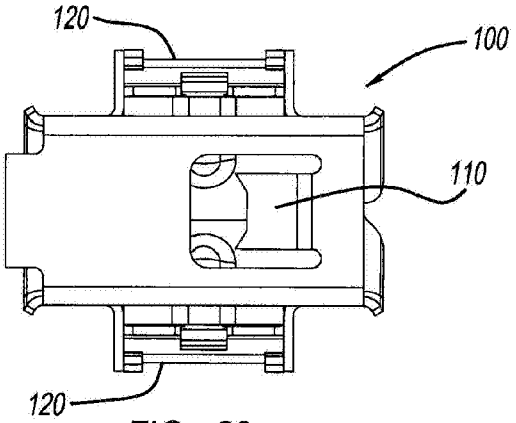

FIG - 20

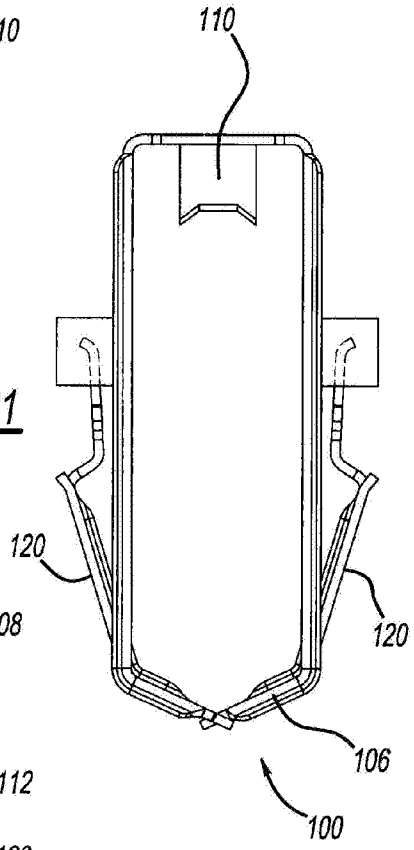

FIG - 21

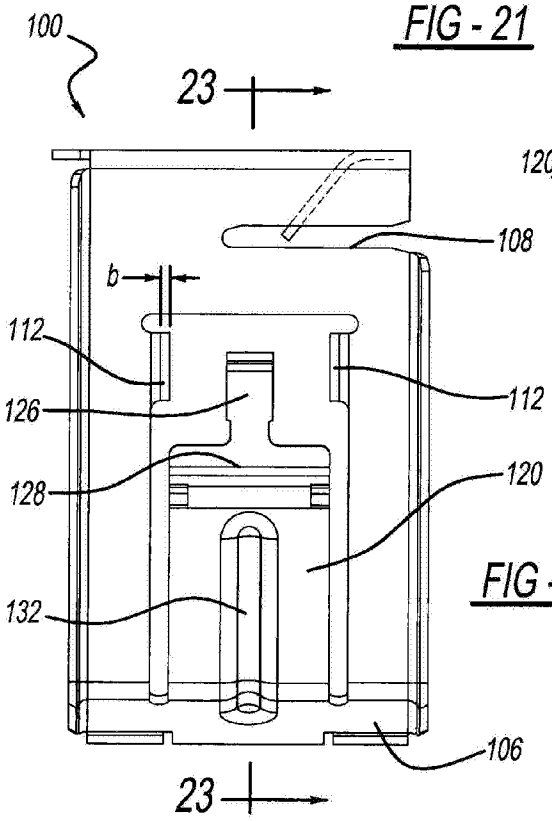

FIG - 22

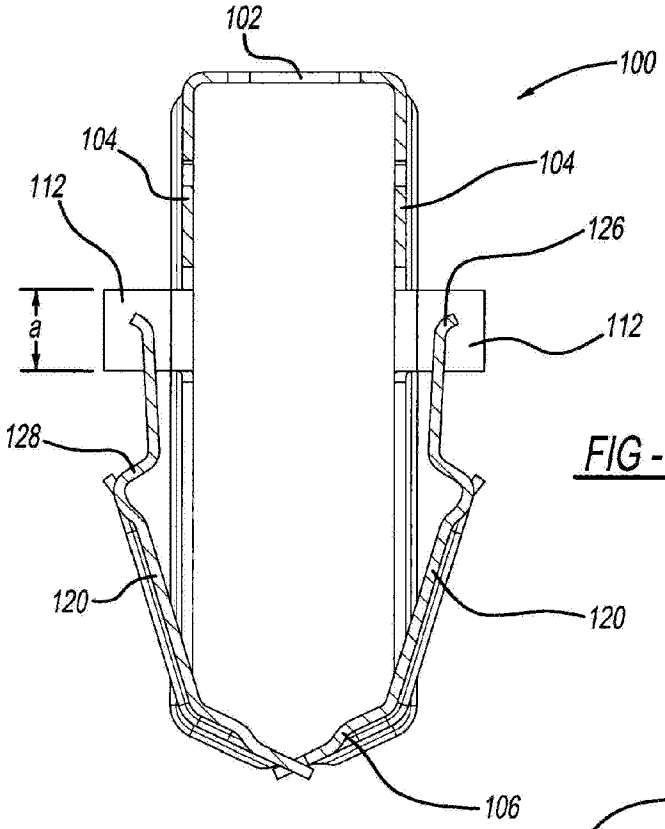
102
100
104
104
112
126
a
112
128
120
120
106

FIG - 23

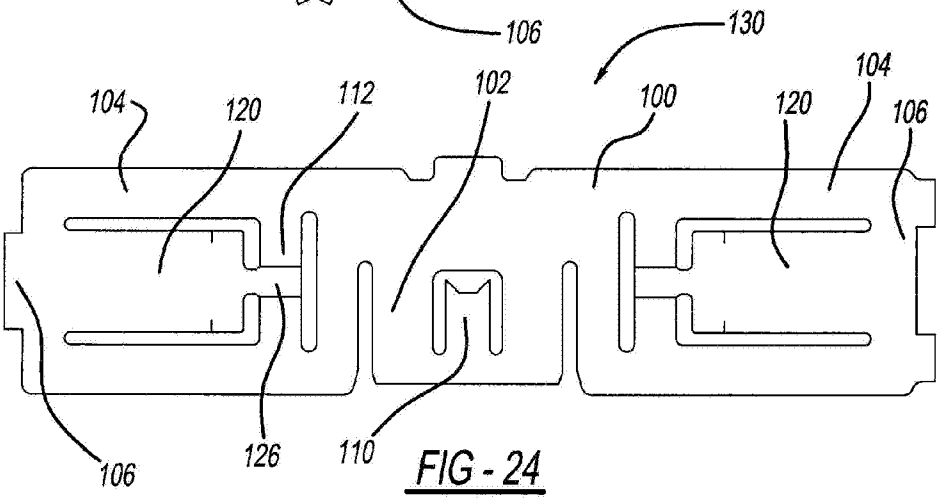
130
104
120
112
102
100
120
104
106
106
126
110

FIG - 24

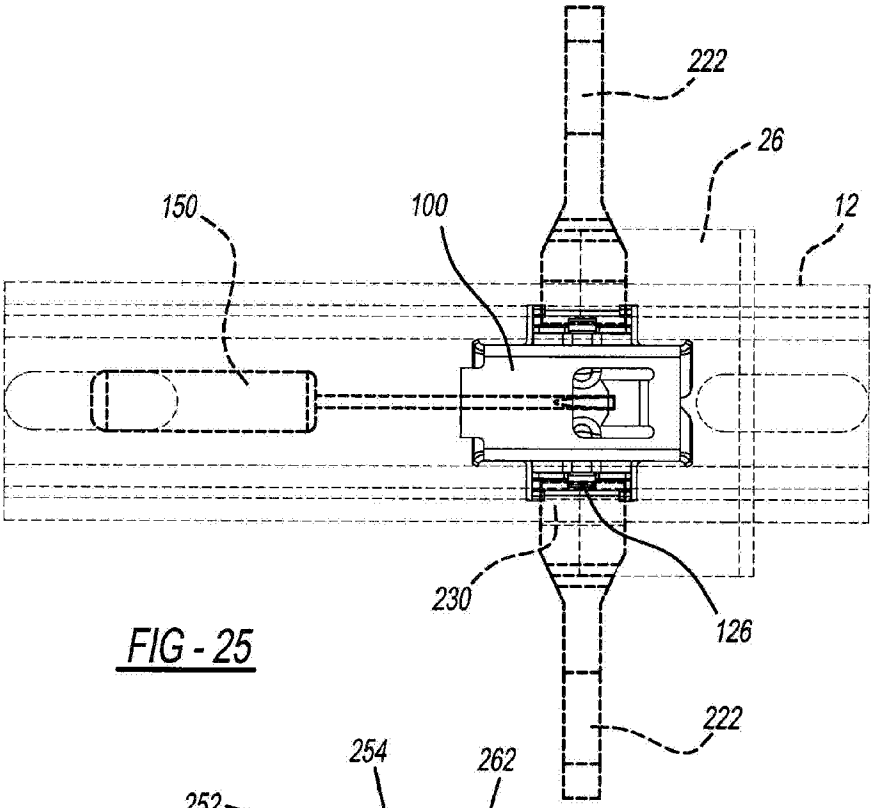
222
26
150
100
12
230
126
222

FIG - 25

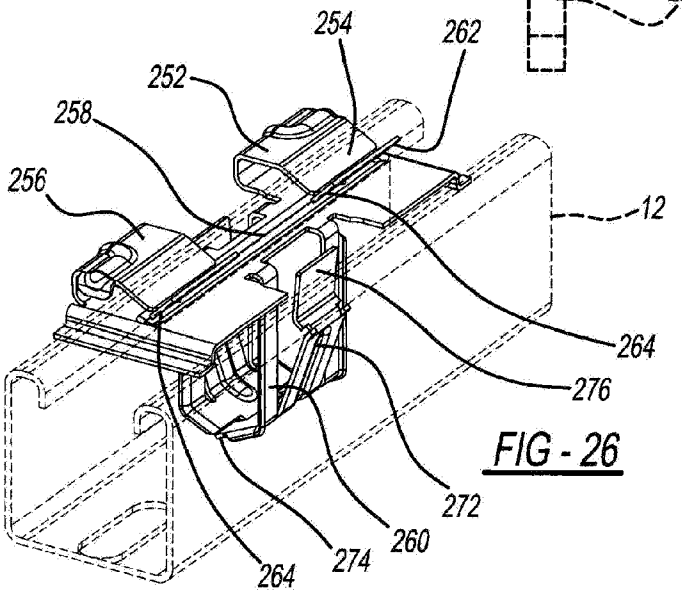
254
262
252
258
256
12
264
276
272
260
274
264

FIG - 26

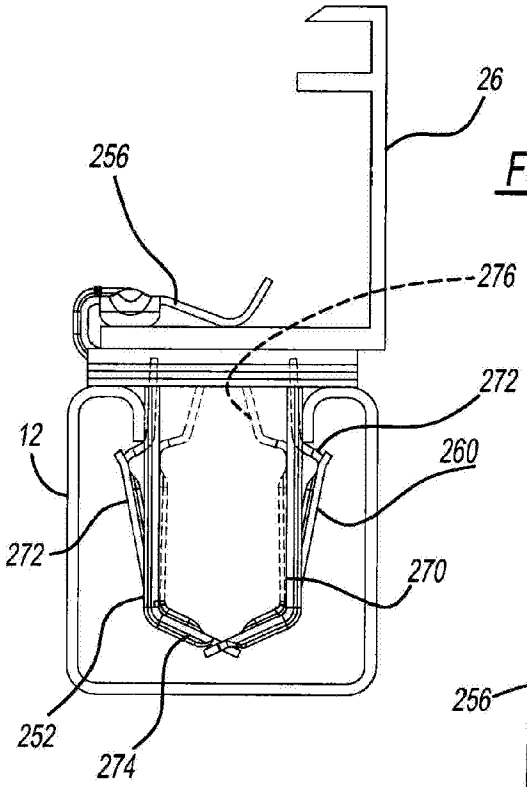
26
256
276
272
12
260
272
270
252
274

FIG - 27

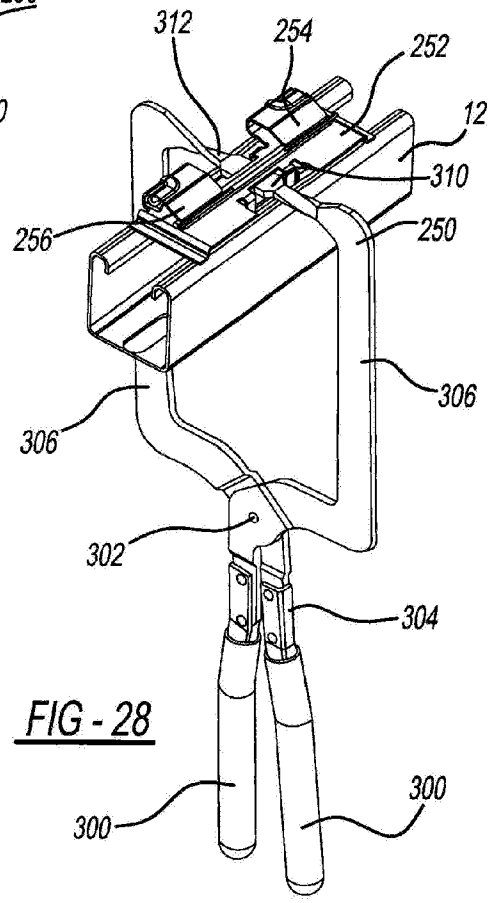
312
254
252
12
310
256
250
306
306
302
304
300
300

FIG - 28

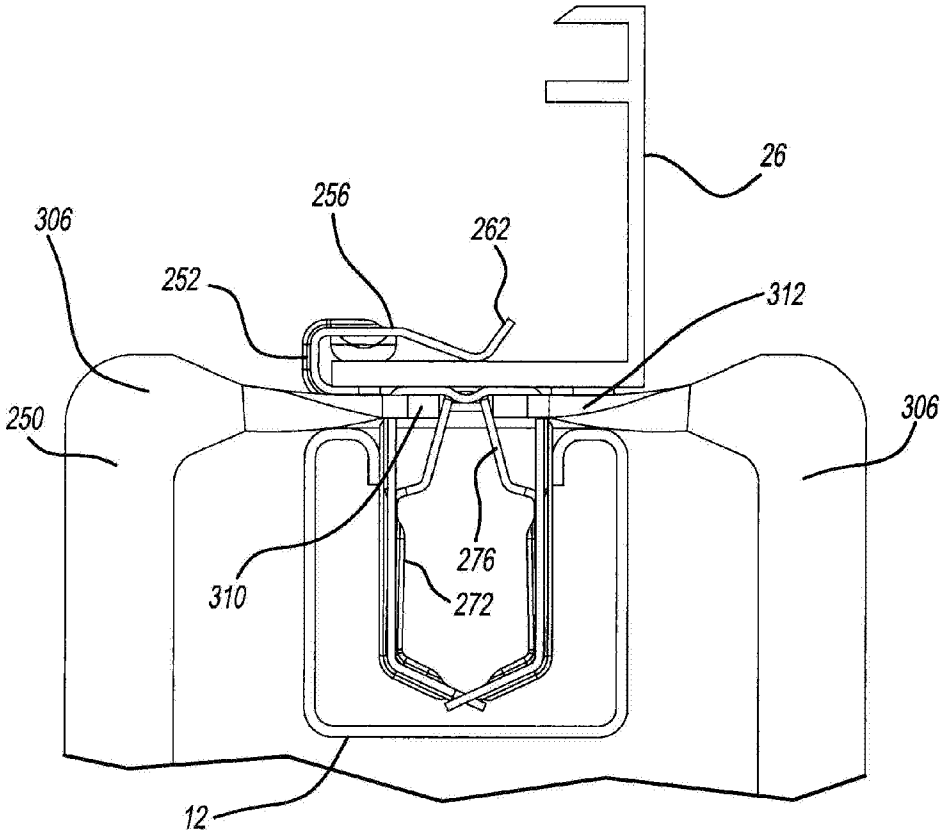

FIG - 29

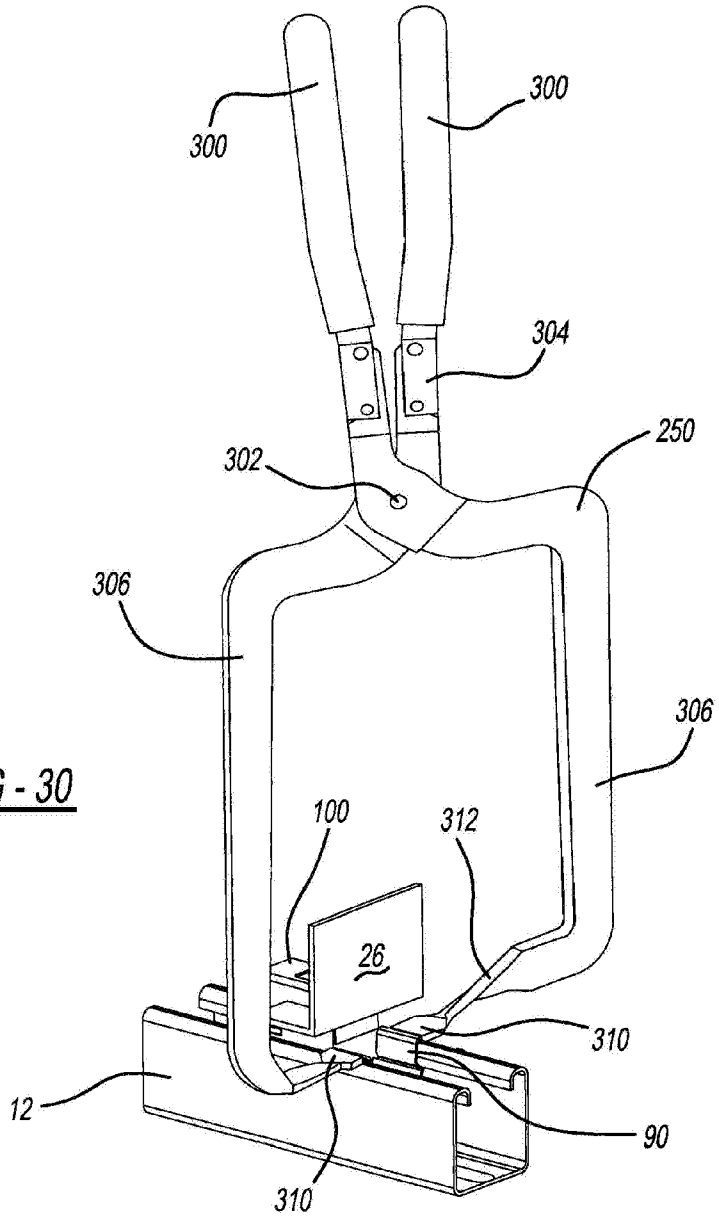

FIG - 30