Sept. 18, 1934. H. R. MILLER 1,974,190

MACHINE FOR DIGGING, REMOVING, AND SMOOTHING DIRT, GRAVEL, AND THE LIKE

Filed Dec. 26, 1931 4 Sheets-Sheet 1

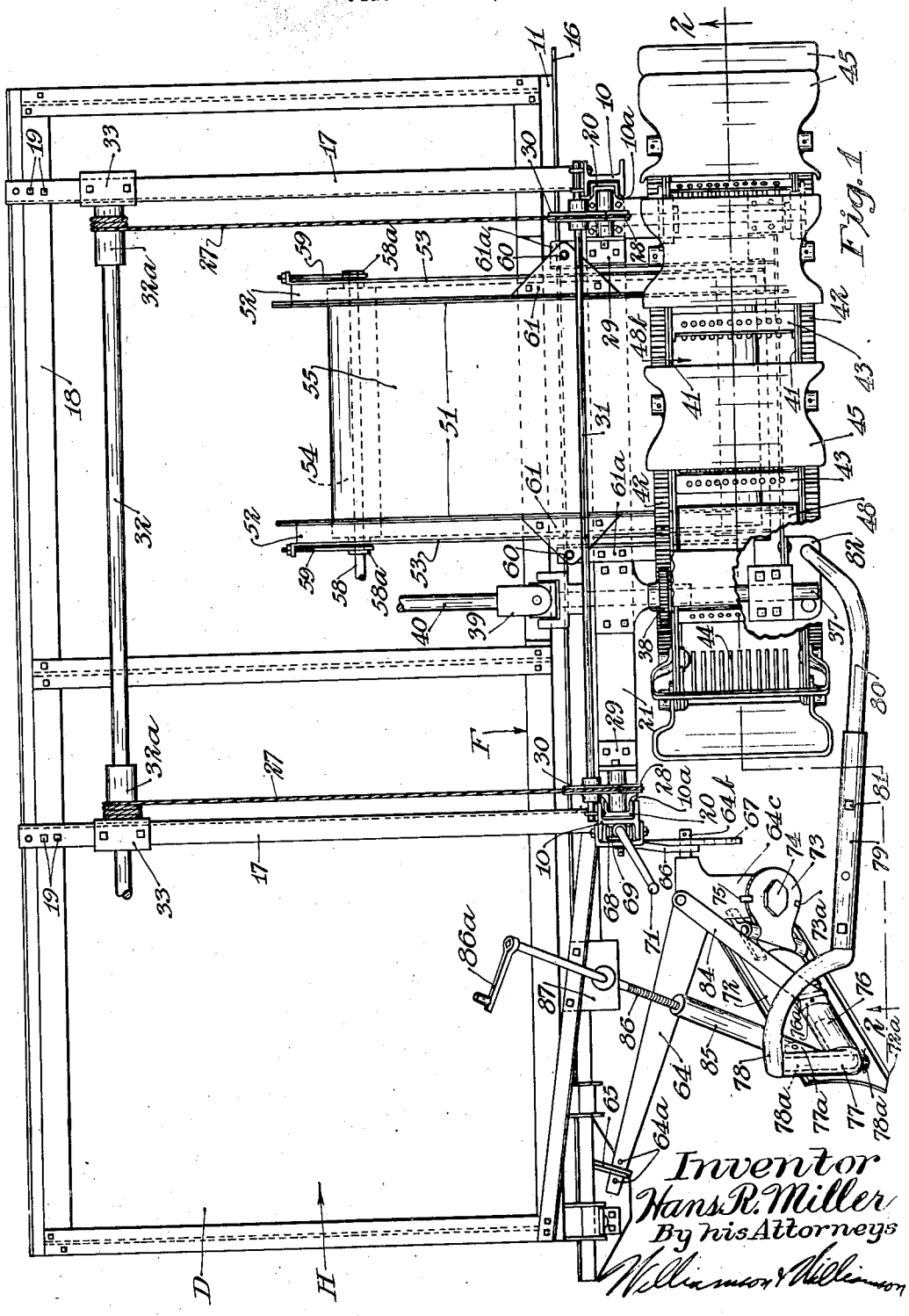

Fig. 1

Inventor
Hans R. Miller
By his Attorneys
Williamson & Williamson

Sept. 18, 1934. H. R. MILLER 1,974,190

MACHINE FOR DIGGING, REMOVING, AND SMOOTHING DIRT, GRAVEL, AND THE LIKE

Filed Dec. 26, 1931 4 Sheets-Sheet 2

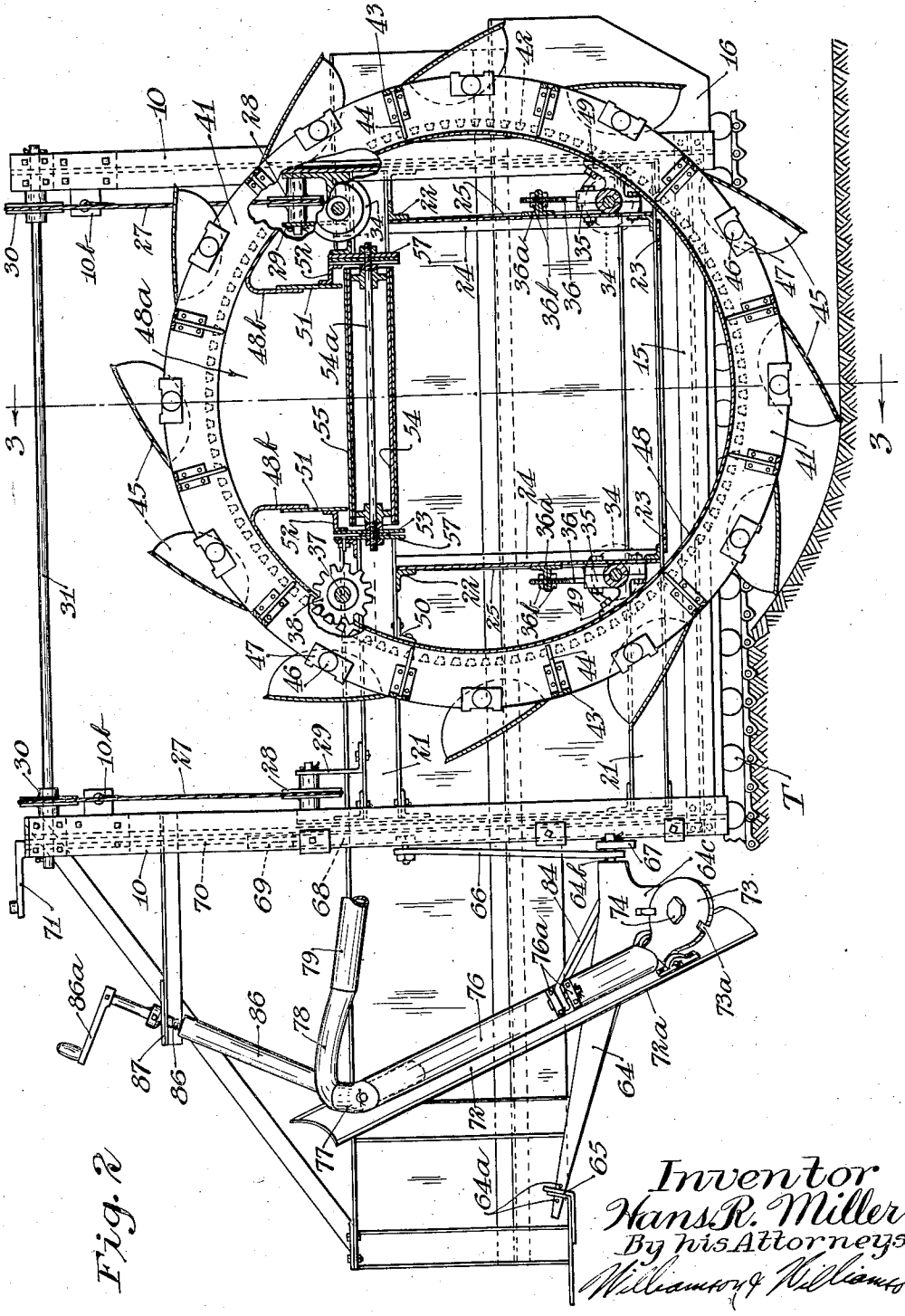

Fig. 2

Inventor
Hans R. Miller
By his Attorneys
Williamson & Williamson

Sept. 18, 1934. H. R. MILLER 1,974,190

MACHINE FOR DIGGING, REMOVING, AND SMOOTHING DIRT, GRAVEL, AND THE LIKE

Filed Dec. 26, 1931 4 Sheets-Sheet 3

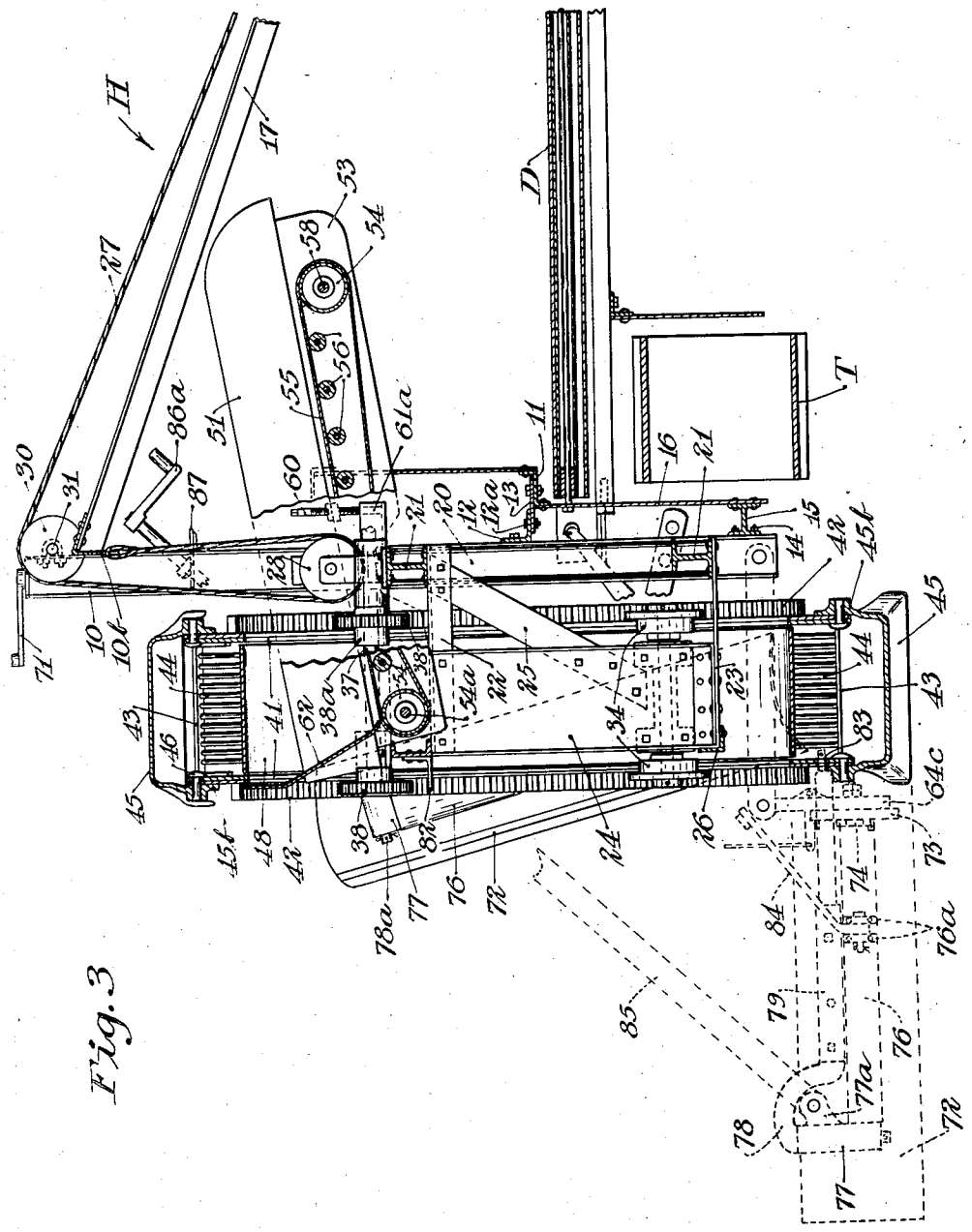

Fig. 3

Inventor
Hans R. Miller
By his Attorneys
Williamson & Williamson

Sept. 18, 1934. H. R. MILLER 1,974,190

MACHINE FOR DIGGING, REMOVING, AND SMOOTHING DIRT, GRAVEL, AND THE LIKE

Filed Dec. 26, 1931 4 Sheets-Sheet 4

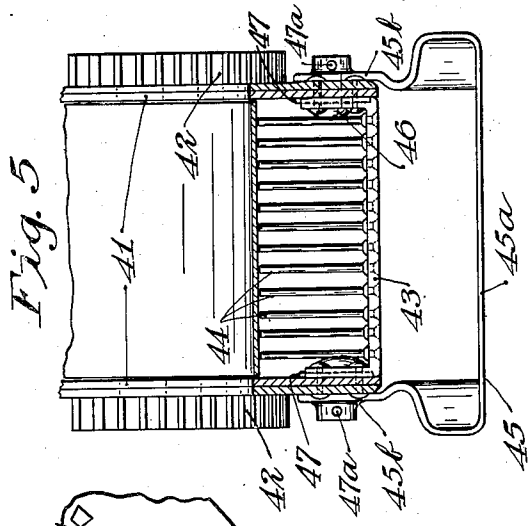

Fig. 5

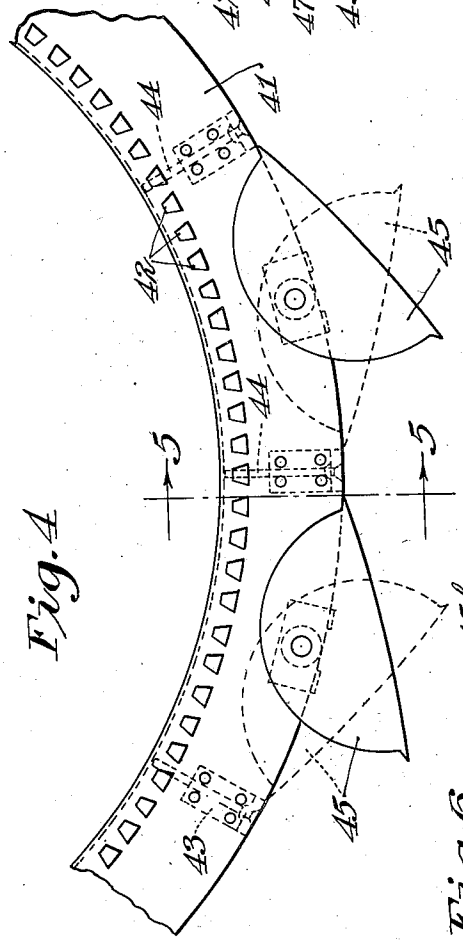

Fig. 4

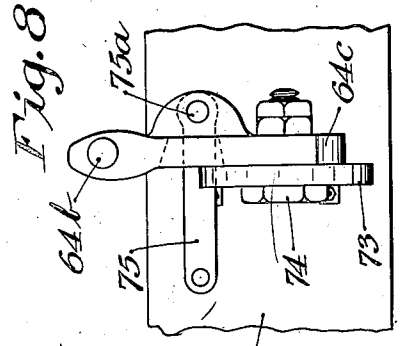

Fig. 8

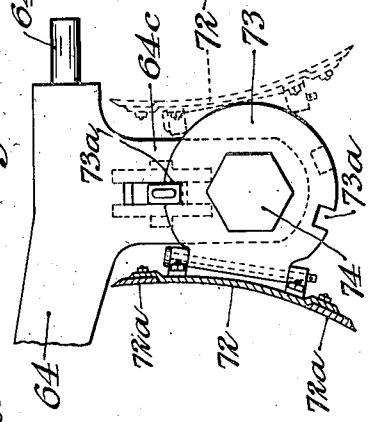

Fig. 7

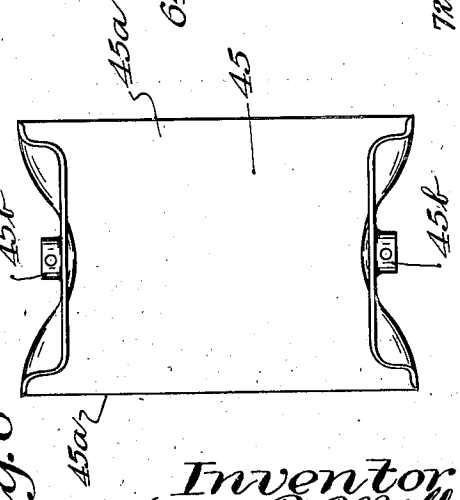

Fig. 6

Inventor
Hans R. Miller
By his Attorneys
Williamson & Williamson

Patented Sept. 18, 1934 1,974,190

UNITED STATES PATENT OFFICE

1,974,190

MACHINE FOR DIGGING, REMOVING, AND SMOOTHING DIRT, GRAVEL, AND THE LIKE

Hans R. Miller, Fergus Falls, Minn.

Application December 26, 1931, Serial No. 583,182

7 Claims. (Cl. 37—190)

This invention relates to machinery for excavating, cutting and removing earth or dirt and more particularly to machines of the type employing an endless excavating mechanism or a wheel equipped with buckets or shovels or other means for cutting and removing the dirt.

Machinery of this general type has been extensively utilized for excavating or cutting below the level of the ground on which the machine is supported, but such machinery has not been adapted for use in cutting and removing banks or material disposed above the supporting surface over which the machine travels.

It is an object of my invention to provide an improved digging and excavating machine for use in removing dirt and material either above or below the level of the ground on which the machine is supported and for further digging and removing dirt when the machine is driven either forwardly or rearwardly.

It is a further object to provide digging and excavating mechanism of the driven endless type or wheel type equipped with buckets or shovels, which is highly efficient to cut, pick up, remove and discharge material when driven either in clock-wise or counter clock-wise directions and which may be conveniently associated with a vehicle or tractor for traveling over a right-of-way, highway or other piece of land.

It is a further object to provide a highly efficient dirt moving and excavating machine especially designed for road building and the like which, in addition to cutting and removing dirt or earth above and below the level of the ground on which the machine is supported, will plane or back-slope and in so doing will function to collect and discharge the dirt or material planed. My machine as disclosed includes a back sloping and planing element which is mounted in advance of the endless excavating mechanism and which, if the excavating mechanism is not in operation for cutting and removing dirt, may be connected with the wheel or endless carrier member of the excavating mechanism to enable the back sloping or planing element to be adjusted in angulation during planing or back sloping operations through short operations of said endless carrier member.

Another object is to provide in dirt removing and excavating machinery means for varying to a limited extent the angulation of an endless excavating member with reference to the frame of the tractor or vehicle on which said mechanism is mounted thereby enabling an inclined cut or bank to be effected.

These and other objects and advantages of the invention will be fully set forth in the following description made in connection with the accompanying drawings, in which like reference characters refer to similar parts throughout the several views, and in which:—

Fig. 1 is a top plan view of an embodiment of my invention, some portions of the endless excavating member being broken away and showing my back sloping mechanism operatively positioned to slope a bank and move the dirt in positions to be collected and removed by means of the excavating wheel disposed at the rear thereof;

Fig. 2 is a vertical sectional view taken approximately along the line 2—2 of Fig. 1 showing the machine, with the exception of the excavating and digging wheel and its supporting mechanism in side elevation;

Fig. 3 is a cross section taken substantially along the line 3—3 of Fig. 2, the dotted lines indicating the position of the back sloping and planing members when the machine is operated as a planer;

Fig. 4 is a detail side elevation on a larger scale showing a segment of the excavating wheel with a pair of the shovels or buckets, the dotted lines indicating the shifted position of the buckets or shovels for digging when the wheel is driven in a counter clock-wise direction with the tractor or vehicle traveling rearwardly;

Fig. 5 is a cross section taken substantially along the line 5—5 of Fig. 4, but, however, showing one of the buckets or shovels in a midway position between the two operative positions;

Fig. 6 is a top plan view of one of the shovels or buckets detached;

Fig. 7 is a vertical sectional view through the inner or attached end of the back sloper and planing mold board showing the rear or attachment end of the mold-board-supporting beam and also showing the manner in which the said mold board may be reversed; and

Fig. 8 is a detail rear elevation showing the attachment bracket for the back sloper, mold board and its connection with the supporting beam.

My improvements in dirt removing and excavating machines include the provision of a digging and excavating mechanism of the driven endless or wheel type mounted on an adjustable overhanging support at one of the longitudinal sides of a tractor or vehicle and disposed outwardly of the tracks, wheels or other supporting means, to enable dirt, gravel and the like to be dug and removed at the side of the vehicle either above or below the level of the ground on which the tractor or vehicle is supported.

My digging mechanism as shown includes a se-

ries of circumferentially arranged buckets or shovels adapted to cut, remove and elevate dirt and the like both when the endless carrier member of wheel is driven in clockwise or counter clockwise direction. As shown, said buckets are provided with oppositely disposed cutting edges and are shiftable automatically by reversing the driving of the wheel to properly position the same with regard to the direction of rotation of the endless carrier member. I do not, however, limit myself to the use of shiftable dirt digging elements, but contemplate the use of any digging or plowing elements which will successfully operate regardless of the direction of revolution of the carrier member.

I closely associate with said digging mechanism a planer or back sloper which also extends outwardly of said longitudinal side of the vehicle directly in front of the digging mechanism in such manner that a bank may be sloped or material planed thereby and the removed dirt directed to the digging mechanism which then acts as an elevator for this material. Further cooperation between the back sloper and digging mechanism is present in the provision of an actuating means for adjusting the angulation of the back sloper during certain operations thereof. In such operations the wheel or carrier member is normally stationary and may be momentarily connected for driving through short oscillations to act as a crank or power adjustment for the back sloper. Other cooperative functions of the back sloper and digging mechanism will be hereafter explained.

In the embodiment of my invention illustrated in the drawings my improved mechanism is associated with a conventional type of tractor, some portions of which are shown including one of the endless tracks T and including a rectangular frame indicated as an entirety by the letter F which is supported on the main tractor frame and constitutes a frame work for a large hopper H. The hopper as shown is provided with a bottom comprising an endless dumping conveyor D of the structure disclosed in my Patent No. 1,942,034, patented January 2, 1934, entitled Road building machine. A detailed description of the hopper and its associated mechanism is unnecessary inasmuch as it constitutes no important part of my present invention.

My excavating and cutting mechanism as well as my improved back sloping mechanism is supported from the tractor and as shown, from the frame work of the hopper and is disposed exteriorly at one of the longitudinal sides thereof. To this end a pair of strong vertical standards 10 are rigidly secured to the left hand side of the tractor and hopper frames. As shown the hopper H is provided with a longitudinal lower Z-beam 11 (see Fig. 3) to the horizontal web of which the upright standards 10 are secured by suitable means such as heavy angle brackets 12 which are adjustably clamped by bolts 12*a* to attachment plates 13 which have slotted outwardly extending portions through which the clamping bolts 12*a* extend. The lower ends of standards 10 are connected by bolts 14 with an H-beam 15 (see Fig. 3) which is in turn rigidly secured to a heavy depending plate 16 rigidly secured to the tractor frame and shielding one of the tracks T and its associated mechanism. The upper end of each standard 10 as shown is rigidly secured to a diagonal brace angle 17, which brace angles traverse the top of hopper H and are adjustably secured at their inner ends (see Fig. 1) to the longitudinal angle beam or frame member 18 disposed at the opposite side of the hopper. Adjustment may be made in the attachment of the right hand or inner ends of brace angles 17 in any suitable manner, as by providing a series of apertures in the attachment ends of angles 17 through any one of which bolts 19 may extend, said bolts engaging apertured portions of the hopper frame beam 18.

The upright standards 10 may be conveniently constructed from H-beams and have opposed guide channels 10*a* in which are slidably mounted vertical channels 20 of the supporting frame for the excavating and dirt removing mechanism. Vertical channels 20 are rigidly secured together, as shown, by horizontal H-bars 21 at their upper and lower ends forming a rigid rectangular supporting structure which is slidably and adjustably supported in the vertical guide portions of standards 10. Overhanging angle bars 22 are rigidly secured at their inner ends to the lower web of the upper H-bar 21 and extend laterally from the longitudinal side of the tractor frame; and outwardly projecting flat bars 23 extend laterally from and are rigidly attached to the lower flange of the lower H-bar 21, said flat bars 23 being vertically aligned with the overhanging angle bars 22 respectively. A relatively wide vertical channel 24 rigidly connects each of the overhanging angles 22 with its cooperating bar 23 and the frame so formed is additionally strengthened by diagonal braces 25 secured at their upper ends to angle bars 22 and at their lower ends to the channel members 24. The lower ends of channels 24 as well as the outer ends of flat bars 23 are rigidly secured together by means of a horizontal angle bar 26. Additional diagonally disposed bracing means may be provided at the upper and lower sides of the box-like rectangular supporting frame above described.

Said supporting frame is adjustably supported by suitable means, such as heavy cables 27 which as shown are secured at their stationary ends to additional brackets 10*b* mounted adjacent the upper ends of standards 10 and said cables pass beneath sheaves 28 which are journally connected to the upper ends of the supporting frame by means of brackets 29. Cables 27 are then passed around sheaves 30 mounted at the upper ends of standards 10 and as shown being journaled on a horizontal shaft 31 which extends longitudinally of the machine between the upper ends of standards 10. The opposite ends of cables 27 are attached to the reels 32*a* of a windlass shaft 32 which may be conveniently journaled in bearings 33, as shown, mounted on the diagonal angle braces 17 located adjacent the right hand side of the hopper H. Windlass shaft 32 is preferably connected for driving with a transmission mechanism (not shown) which is adapted to drive in both forward and reverse directions.

Externally of the overhanging supporting frame for the excavating mechanism and adjacent each of three of the corners thereof I mount a pair of flanged idler wheels 34, the flanges of said wheels being disposed outwardly and oppositely. Said idler wheels as shown are journaled in split bearings 35 and each of the two lower corners of the frame is provided with a set of said idlers and also the upper rear corner of the frame. The bearings 35 for the lower idler wheels are slidably connected with the wide vertical channels 24 of the supporting frame and vertical adjustment screws 36 are mounted in brackets 36*a* attached to channels 24, the lower ends of said adjustment screws engaging the upper ends of bearings 35,

suitable means such as a pair of nuts 36b being provided to facilitate adjustment.

At the upper and forward corner of the overhanging supporting frame and externally thereof a short pinion shaft 37 is journaled, said shaft having affixed thereto a pair of spaced driving pinions 38. Said shaft extends inwardly to a point approximately above the left hand longitudinal edge of hopper H and is connected by a universal coupling mechanism 39 with a driving shaft 40 which may be connected with the transmission mechanism previously referred to or any suitable source of power which is provided with means for driving in forward and reverse directions and preferably at a plurality of speeds.

The embodiment of my dirt removing and excavating mechanism comprises a substantially rigid wheel revolubly mounted upon the supporting idler wheels 34 and driving pinions 38. I also contemplate the use of endless flexible excavating mechanism of the conveyor or chain and bucket type.

The structure of the endless carrier or rigid wheel illustrated comprises a pair of spaced annular side members 41 the inner edges of which surround and are supported upon the idler wheels 34 and also cylindrically bossed portions 38a of the driving pinions 38. The flanges of the idler wheels 34 and also the toothed flange of the driving pinions 38 overlap the inner peripheral edges of the wheel sides 41 and retain the same against outward lateral displacement. Large internal gears 42 are provided by each of the wheel sides and while any suitable structure may be utilized, the form disclosed comprises a series of circumferentially arranged gear teeth in the form of lugs projected outwardly from the outer sides of the respective wheel members 41 and extending substantially normal to the planes of said wheel sides, which internal gears are constantly meshed with the two driving pinions 38 respectively. Wheel sides 41 are spaced apart and rigidly connected by means of U-shaped supporting bars 43 (see particularly Fig. 5) and said supporting bars are circumferentially arranged with respect to the wheel and rigidly carry a series of inwardly extending rods 44 which extend radially of the wheel and constitute a series of reticulated dividers the purpose of which will later be explained. The said radial dividers separate the interior of the wheel defined by the sides 41 into a plurality of dirt receiving sectors and medially disposed of said sectors and mounted transversely upon the external periphery of the wheel are a series of shiftable excavating buckets or scoops 45. While these scoops may vary considerably in shape and size, the form illustrated in Figs. 4, 5 and 6 was found highly satisfactory for the work intended. The scoop illustrated is of general U-shaped construction having a somewhat flared outer soil cutting portion or body 45a, which is pivotally connected to the annular sides 41 of the wheel by bossed attachment ends 45b. Headed pivots 46 connect the attachment flanges of the buckets with the sides and are applied as shown on the inner surfaces of the wheel sides and spring friction clips 47 are interposed between the heads of said pivots and the adjacent surfaces of the wheel sides. The outer ends of said pivots are secured to the bossed portions of the attachment flanges of the shovels by suitable means such as the pins 47a. Sufficient compression is placed upon the resilient clips to prevent the shovels or scoops from swinging during the normal revolution of the wheel. The shovels or scoops 45 are each provided with a pair of oppositely disposed edges or elements for cutting dirt. As shown the opposite edges of the buckets are sharpened although I contemplate the use of detachable cutting edges or cutting fingers for engaging and removing dirt. The widths of the bodies 45a of the scoops or buckets are such that, when the scoops are disposed either in the position shown in full lines in Fig. 4 or in the dotted line position, one of the edges of each scoop will be disposed in juxtaposition to one of the radial dividers.

A stationary cut off rim 48 is disposed concentrically of the wheel comprising an annular plate and occupies the position just inwardly of the inner peripheral edges of said wheel sides traversing the space between the two annular sides 41. This rim may be rigidly supported from any suitable attachment means connected with the overhanging supporting frame and as shown I provide attachment lugs 49 integrally formed with the split bearings 35 for the idler wheels to which the rim 48 is secured. Other attachment brackets 50 may be provided which are riveted or otherwise rigidly secured to the internal periphery of rim 48. Rim 48 encompasses the internal periphery of the wheel with the exception of a portion at the top thereof. At said portion the rim 48 is provided with a cut off or discharge passage 48a which may be formed by breaking the upper portion of the rim and turning the broken or open ends thereof downwardly at 48b, which depending ends may telescope with the vertical longitudinal sides of a cross conveyor 51. The cross conveyor is mounted in a frame comprising, as shown, a pair of spaced Z-bars 52 to the outer flanges of which are secured elongated guide plates or conveyor sides 53. Rollers 54 are journaled in the opposite ends of the guide plates 53 respectively and and endless apron or belt 55 is trained about said rollers and the upper run thereof also passes over a series of small spaced supporting rollers 56 journaled between the guide plates 53. The roller 54 at the receiving end of the conveyor is journaled on a dead shaft 54a which acts as a pivot shaft for the entire conveyor, being pivotally connected with depending supporting plates 57 which are secured transversely across the upper portion of the overhanging supporting frame for the excavating mechanism. The cross conveyor is angularly adjustable upon the axis of shaft 54a and may be held in a desired adjusted position by suitable means such as vertical adjustment screws 60 which threadedly engage elements of V-shaped plates 61 rigidly carried by the sides of the conveyor frame. The lower ends of adjustment screws 60 abut the horizontal webs of short angle bars 61a which may be rigidly secured to the upper portions of the overhanging supporting frame.

The roller 54 at the delivery end of the conveyor is fixed to a shaft 58 which shaft may be journaled in slide bearings 58a adjustably mounted in the conveyor sides 53 and which are adjusted by belt tightening devices 59. Shaft 58 is drivably connected with a source of power, preferably the source of power for driving the endless carrier or wheel 41. An inclined end plate 62 is rigidly and suitably mounted at the receiving end of the cross conveyor and preferably extends from endless belt 55 upwardly to the inner peripheral edge of one of the annular side members 41 of the wheel.

Forwardly of the dirt removing and excavating mechanism is mounted a cooperating plan-

ing and back sloping device which is also projected, as shown from the left hand longitudinal side of the tractor or vehicle. Said structure includes a plow beam 64 which is loosely fulcrumed and connected at its forward end with a heavy attachment bracket 65 suitably affixed, as shown, to the lower front corner of the hopper frame. Heavy pins 64*a* are disposed at opposite sides of the upstanding portion of attachment bracket 65 confining the beam 64 against longitudinal displacement in either direction. The rear end of beam 64 carries a projecting stub 64*b* which is pivotally connected with an inclined supporting bar 66 and also with a substantially horizontally extending bar 67, the opposite ends of said bars being suitably connected at widely spaced points with a vertical supporting member, as shown, in the form of a channel member 68, which channel member is slidably mounted in the forwardly disposed guide channel provided by the H-beam which comprises the forward vertical standard 10. Channel 68 may have affixed to its upper end a screw sleeve 69 (see dotted lines Fig. 2) which threadedly engages a vertical adjusting screw 70 fixed to a crank handle 71 which is mounted at the top of forward vertical standard 10.

The plow beam 64 is provided at its rear end with a heavy laterally projecting attachment arm 64*c* to which the mold board 72 of the planer or back sloper is pivotally and reversably connected. The reversible connection of said mold board is well shown in Figs. 7 and 8. A heavy attachment tongue 73 is hinged adjacent the inner end of the mold board on an axis extending transversely of said mold board and said attachment tongue 73 is pivotally connected by a heavy bolt 74 with arm 64*c* of the plow beam. The periphery of attachment tongue 73 is substantially circular and is provided as shown with a pair of retaining notches or recesses 73*a* disposed slightly more than 180 degrees apart. A retaining latch 75 extends substantially perpendicular to the attachment arm 64*c* and attachment tongue 73 and is hinged by means of a pivot 75*a* to a lug provided in the attachment arm of the plow beam, the free end of said latch working through a slot in attachment arm 64*c* and engaging the periphery of attachment tongue 73 to lock said tongue to the plow beam in two different or reversed positions as shown by the full and dotted lines respectively in Fig. 7. Mold board 72 may carry the conventional detachable cutting edges 72*a* seated in off set longitudinal marginal portions of the mold board. It will be noted that a cutting edge is provided at each longitudinal edge of mold board 72. The back of mold board 72 is reinforced by means of a rigidly secured longitudinally extending pipe 76 and an upstanding elbow 77 is rotatably telescoped in the outer end of said pipe, the upwardly projecting end of said elbow constituting a socket for rotatably accommodating the straight depending pin 78*a* of a curved arm or thrust element 78. The shank of arm 78 is telescoped within a sleeve 79 and rigidly secured thereto and the rear end of sleeve 79 receives a curved rod or rigid connection 80 and is adjustably and non-rotatively connected therewith by means of one or more bolts 81 adapted to engage a series of apertures formed in sleeve 79. The rear end of curved rod 80 is diminished at its extremity for insertion and attachment in one or the other of two recessed portions of a strong attachment bracket 82 rigidly affixed to the upper forward corner of the overhanging suporting frame for the digging wheel. Said diminished end of rod 80 may also be inserted in an aperture 83 formed in one of the annular side plates 41 of the wheel, as shown by the dotted lines in Fig. 3, the purpose of this connection being to effect a power adjustment means of the crank type for varying the angulation of the back sloper or planer in certain operations of the machine.

It will be noticed that the pivotal connection of elbow 77 with pipe 76 and the pivotal connection of curved arm 78 with the upstanding socket of elbow 77 cooperate to provide a universal connection or coupling between the outer end of the mold board and its connection with the machine. An end thrust link 84 is pivoted at its inner end to the rear portion of plow beam 64 and has a turned outer end pivoted between attachment lugs 76*a* disposed at the intermediate portion of the back of mold board 72 and more precisely carried by the reinforcing pipe 76. Said link 84 relieves both the outward and inward thrust placed upon the back sloper structure.

Adjustable means are provided for varying the angulation of mold board 72 with respect to the horizontal and as shown said means comprise a threaded sleeve 85 pivotally connected at its lower end with the outer portion of the mold board. Said pivotal connection may be effected by providing an attachment lug 77*a* upon an upstanding portion of elbow 77. Sleeve 85 is threadedly connected with an elongated screw 86 which extends upwardly and inwardly toward the frame of the machine being rotatably connected with a heavy bracket 87 secured to the frame work of the tractor or if desired to the frame work of the hopper H. The upper end of screw shaft 86 is provided with a crank handle 86*a* to facilitate turning of the same.

Operation

When my improved machine is utilized solely for digging and excavating material the back sloper mechanism may be swung upwardly and inwardly against the frame of the vehicle or tractor or if desired may be quickly and easily removed from the machine. It is, of course, understood that the tractor or vehicle may travel and be guided either in a forward or rearward direction. When the machine is traveling forwardly I prefer to drive the wheel or endless carrier in clock wise direction when viewed from the left hand side of the machine. The overhanging supporting frame for the wheel is conveniently adjusted for effecting digging at the requisite depth or height through the operation of the windlass shaft 32. Upon revolution of the wheel in clockwise direction the digging shovels 45 will automatically be shifted to the position indicated in full lines in Figs. 1 to 4 inclusive of the drawings and will cut and remove material, the rotative movement of the wheel or carrier forcing the removed dirt or material inwardly into the sector shaped carrier chambers defined by the dividers 44. The material is elevated to the top of the wheel through the cooperation of the stationary cut off rim 48 and at the top of the wheel drops through the discharge passage 48*a* onto cross conveyor 55. Cross conveyor 55 as shown is positioned to deliver the dirt and material to hopper H but may be positioned to dump material at the outside of the wheel, which is desirable in ditch digging. In the embodiment of the invention illustrated the cross conveyor may be driven in reverse direction and will discharge

the material through the open center of the wheel outwardly thereof.

In certain operations, such as in digging rocky soil it is sometimes of advantage to revolve the carrier member or wheel counter-clockwise when the machine is traveling in a forward direction, to enable the digging wheel to climb over large rocks and throw the same rearwardly in the trench or ditch. The transmission mechanism is accordingly shifted to a desired reverse speed and the counter-clockwise movement of the digger wheel automatically effects the shifting of the shovels 45 from the position shown in full lines in Fig. 4 to the position shown in dotted lines. The resilient clips 47 afford sufficient friction to yieldingly hold the shovels until the revolution of the wheel is reversed.

It will be noted that due to the overhanging supporting frame for the endless carrier or wheel, adjustment considerably above or below the level of the ground upon which the vehicle is traveling may be readily effected. Thus I may cut and remove a bank of even greater height than the diameter of my carrier wheel as well as dig a ditch of considerable depth.

The cut or ditch formed by the digging wheel may be inclined from the vertical within certain limits by adjusting or tilting the upright standards 10. This is effected by releasing clamping bolts 12*a* which rigidly connect brackets 12 of the standards to the slotted attachment plates 13. It is also necessary for adjustment to release the bolts 19 which adjustably secure the diagonal angle bars 17 with the right hand side of the hopper frame and repositioning said bolts 19 in the desired holes to secure the standards in the desired tilted position. In this manner an inclined bank may be formed at one side of the cut.

When it is desired to cut and dig with the machine traveling rearwardly the endless carrier or wheel is usually driven in a counter-clockwise direction, automatically shifting the buckets or cutting elements to the dotted line positions shown in Fig. 4. It will, of course, be apparent that for heavy work in digging rocky soil the wheel if desired may be revolved in a clockwise direction when the machine is traveling rearwardly over the ground.

In most excavating or digging machinery of the endless carrier type the digging mechanism can cut only below the level of the ground upon which the vehicle or machine is supported. By the use of my overhanging supporting frame for the digger wheel positioned beyond the tracks or supporting wheels at one of the sides of the machine I am able to elevate the wheel above the lower runs of the tracks or wheels of the vehicle and can advantageously cut a high bank at the side of the machine.

When the excavating or digging wheel is operated in conjunction with the back sloper as shown in Figs. 1 to 3 of the drawings, assuming the machine is traveling in a forwardly direction it will be seen that the material planed by the blade of the back sloper may be directed inwardly to a position directly in advance of the forward edge of the wheel and said material will be collected by the shovels 45, elevated to the top of the wheel and discharged upon the cross conveyor. It will also be apparent from an inspection of the dotted line position of the back sloper illustrated in Fig. 3 that if desired the back sloper or planer may be lowered to a substantially horizontal position and secured or connected with the peripheral portion of one of the annular sides 41 of the wheel by means of the connection, including the adjustably united parts 78, 81 and 80 in which instance the digging wheel remains normally stationary and is momentarily operated through short oscillations in clockwise or counter-clockwise directions to act as a power adjustment for varying the angulation of the mold board 72 of the planer so that material may be planed and moved inwardly toward the tractor or vehicle or outwardly as desired.

Another important function obtained by the cooperation of my rotary digging mechanism with the planer or back sloper is the efficient and practical use of the machine for laying sewers, hollow tile and pipe lines. In this connection the excavating wheel is adjusted by lowering its overhanging supporting frame to cut a ditch of the desired depth, the cross conveyor including the belt 55 is driven in reverse direction to discharge material outwardly of the wheel and the mold board 72 of the back sloper is reversed as shown in the dotted line positions in Fig. 7 and adjusted a proper distance from the digger wheel to scrape material into the ditch, filling the same, taking the place of a back filler. The machine travels during such operation in a rearwardly direction and at a very slow speed and preferably with the carrier wheel revolving in counter-clockwise direction. The sectional sewer pipes, tiles and the like are telescopically laid directly behind the wheel and in advance of the back sloper and are successively covered in the manner previously described.

It will, of course, be understood that various changes may be made in the form, details, proportions and arrangement of the parts without departing from the scope of my invention, which, generally stated, consists in a device capable of carrying out the objects above set forth and in the novel parts and combinations of parts disclosed and defined in the appended claims.

What is claimed is:—

1. In excavating machinery, a vehicle or tractor, an auxiliary supporting frame supported from said vehicle and having supporting members projecting laterally from said vehicle, a movable carrier member surrounding said projecting members and supported for movement thereon, said carrier member thus being unobstructed from top, bottom, front and rear and a series of excavating elements mounted on said carrier and adapted to cut, remove and elevate material, said excavating elements having blades provided with oppositely disposed cutting edges and having turned attachment portions pivotally secured adjacent their extremities to the exterior sides of said carrier member and means for driving said carrier in forward and reverse directions.

2. In excavating mechanism, a wheel comprising a pair of spaced annular side members, means for rotatively moving said wheel, a stationary rim constituting a cut off disposed concentrically of said wheel and traversing the space between said side members, said rim having an opening in the upper portion thereof constituting a material discharge, a series of substantially radial dividers mounted between said side members and defining a series of circumferentially arranged compartments and a series of circumferentially arranged excavating elements carried by said wheel and each associated with one of said compartments.

3. The structure set forth in claim 2 and a conveyor having a receiving end mounted within

said wheel and disposed beneath said material discharge.

4. In excavating machinery, a frame mounted for travel over the ground, an excavating wheel mounted in said frame at one of the longitudinal sides thereof, means for driving said wheel forwardly and rearwardly, a back-sloping and planing member mounted on said longitudinal side of said frame and swingably adjustable and means whereby a connection may be made between said wheel and said back-sloping and planing member for adjusting said member by power.

5. In excavating and plowing machinery, a frame mounted for travel over the ground in forward and rearward directions and soil cutting mechanism mounted on said frame and including a cutting element comprising a shiftable plate having upturned attachment portions and a body or blade terminating in oppositely disposed cutting edges, one extending toward the front of the machine and one extending toward the rear of the machine.

6. In excavating machinery, a frame mounted for travel over the ground in forward and rearward directions, excavating mechanism mounted on said frame and comprising a movable carrier member having spaced sides defining a channel, means for driving said carrier member and a series of shiftable cutter elements mounted on said carrier member, said cutter elements comprising body portions or blades having a pair of oppositely disposed cutting edges, said cutter elements also having turned attachment portions pivoted to the exterior sides of said carrier member on axes disposed inwardly of said body portion.

7. In excavating machinery, a frame mounted for travel over the ground in forward and rearward directions, excavating mechanism mounted on said frame and including a wheel comprising a pair of spaced annular side members, means for rotating said wheel, means cooperating with the side members of said wheel to form an annularly arranged channel, a series of circumferentially arranged excavating elements carried by said wheel, each comprising a body portion traversing said annular side members and disposed outwardly thereof and each having a pair of inwardly extending attachment portions pivoted to said annular side members on an axis extending inwardly considerably of said body portion, said body portion having oppositely disposed cutting edges.

HANS R. MILLER.