E. G. W. DITTMER.

APPARATUS FOR PERFORATION OF CINEMATOGRAPHIC FILMS.

APPLICATION FILED SEPT. 18, 1919.

1,379,396. Patented May 24, 1921.

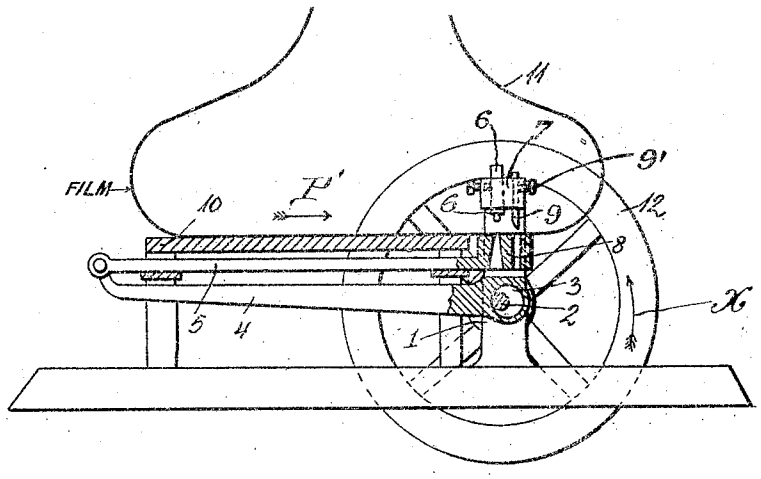

Inventor:
Ernst Gustav Wilhelm Dittmer
By Attys
Fraser, Durle & Myers

UNITED STATES PATENT OFFICE.

ERNST GUSTAV WILHELM DITTMER, OF CHARLOTTENLUND, NEAR COPENHAGEN, DENMARK.

APPARATUS FOR PERFORATION OF CINEMATOGRAPHIC FILMS.

1,379,396. Specification of Letters Patent. Patented May 24, 1921.

Application filed September 18, 1919. Serial No. 324,641.

To all whom it may concern:

Be it known that I, ERNST GUSTAV WILHELM DITTMER, a subject of the King of Denmark, residing at Charlottenlund, near Copenhagen, Denmark, have invented new and useful Improvements in Apparatus for Perforation of Cinematographic Films, of which the following is a specification.

In the previous used apparatuses for perforating of cinematographic films, a so-called catcher is used for feeding the film forward during the punching operation. The catcher consists mainly of a reciprocating arm fitted with pins or claws which are inserted into the holes punched in the film, and feed the film forward a distance equal to the spacing—or a multiple of the spacing—of the holes for each back and forth stroke of the catcher. In order to prevent any error present in the spacing of the holes from accumulating, it is necessary that the claws of the catcher, whenever they engage the holes punched in the film, should be inserted into the last hole or holes punched. Apparatuses where this is done have been constructed, but they are subject to the drawback that the apparatus cannot operate at a sufficiently high speed, because the perforating punch as well as the die must be moved considerably away from the film, in order that the catcher may operate freely.

This drawback has been avoided by letting the catcher work at some distance from the place where the perforation is performed, there being then used two or more guiding pins in firm connection with the punch. The catcher would then feed the film forward some distance, whereafter the guiding pins (whose distance from the punch was exactly one hole-space, and whose front and rear sides, in the direction of the moving film, were beveled,) would be inserted into the holes last punched, so that either one or the other of the beveled faces of the guiding pins would force the film into exact position, the sum of the motions received by the film from the catcher and the guiding pins equaling exactly one hole-space. In the beginning, there will hereby be attained an exceedingly accurate adjustment of the hole-spacing, but the apparatus is subject to the drawback that the guiding pins will quickly be worn and cause the perforation to be inaccurate. Besides, the guiding pins in such apparatus are not adjustable.

These drawbacks are avoided entirely, according to the present invention, in that instead of the regular catcher there is used one or more guiding pins adjustably connected to the punch or punches, which punch and consequently the guiding pins thereon are given a circular motion relatively to the fixed portion of the apparatus. The circular movement may be truly circular, elliptical, or other endless movement. During a portion of this motion, the punch will cut a hole in the film, while the guiding pin takes care of the entire motion of the film, pushing the latter forward partly before and during, and partly after, punching, so that the total motion of the film between two consecutive punchings of holes becomes exactly equal to one hole-space.

The drawing shows one manner of constructing the invention,

The figure showing a perforating apparatus in side elevation.

1 is a fixed bearing or frame, wherein a shaft 2 is journaled. This shaft is fitted with an eccentric disk 3, which moves a connecting rod 4, when the shaft 2 revolves, the said connecting rod imparting, thereby, a reciprocating motion to a carriage 5. The perforating punch 6 is fastened in a head 7 firmly connected to the end of the connecting rod 4 actuated by the disk 3. 8 is the die, which is seated on the carriage 5 directly below the punch 6. One end of the connecting rod 4 is connected to the carriage 5 and imparts thereto a rectilinear reciprocating motion. The head 7 carrying the punch 6 and pin 9 will be given an elliptic motion, as indicated by dotted lines in Fig. 1.

10 is a stationary table, whereon the film 11 slides in the direction indicated by the arrow P^1, while the perforation is being performed. The side of the guiding pin facing the punch is obliquely cut as shown. 12 is a flywheel disposed on the shaft 2.

The apparatus acts in the following manner.

If the flywheel 12 and, thereby, the shaft 2 revolves in the direction indicated by the arrow X the eccentric disk 3 will partly raise the punch 6 and partly move it to the left, so that the punch performs an elliptic motion at the same time as the eccentric 3 moves the die to the left a distance equaling the motion to the left of the punch. During the last half of this motion, the punch

moves downward, and this downward motion is continued when the eccentric 3, after having revolved through 180°, changes the direction of motion of the punch and moves it to the right. During the first part of this motion to the right, the guiding pin 9 will be moved down into the last hole punched in the film, and will move the latter forward by coöperating with the front edge of the hole, and the punch 6 will immediately thereafter be moved toward the film 11, and will penetrate it. During the last quarter of the revolution of the eccentric 3, the punch is again moved upward and away from the film. After the punch 6 has been withdrawn from the film, the guiding pin 9 will remain, for a short while, in engagement with the said hole, coöperating with the front edge thereof during the last portion of the rotation of the eccentric 3 and, thereby, impart to the film a final relatively short forward motion smaller than one hole-space. This space and the accuracy of the motion may be adjusted by vertical adjustment of the guiding pin, the latter then engaging the film during a shorter or longer time, depending on the adjustment, after the punch has been withdrawn from the film and, thereby, moving the film forward a shorter or longer distance. The hole-spacing may also be adjusted more coarsely by selection of suitable different eccentrics 3. For effecting the vertical adjustment of the pin 9 in the head 7, a set screw 9′ may be provided.

The film slides on the table 10 and is guided thereon by the table being fitted with raised side edges. The film forms a loop on the supply side of the apparatus as well as on the discharge side thereof. Hereby an advantage is attained in that nothing opposes the displacements of the film due to the action of the punch and the guiding pin. The perforation of the two rows of holes in the same film is performed simultaneously by means of two punches, which may be fastened in one and the same punch holder. In this case, there may be used a single guiding pin in connection with one of the punches or if desired, a series of one or more guiding pins for each of the punches.

What I claim is:—

1. In an apparatus for perforating films the combination of a punch, a die, a guide-pin for advancing the film, a head on which said guide-pin and punch are mounted, and means for imparting circular movement to said head carrying said punch and guide-pin so as to cause said punch and guide-pin to both perforate and by steps advance the film.

2. In an apparatus for perforating films the combination of a punch, a die, a guide-pin for advancing the film, a head on which said guide-pin and punch are mounted, and means for imparting circular movement to said head carrying said punch and said guide-pin, so as to cause said punch to perforate the film, and said guide pin to by steps advance the film exclusively by means of said guide-pin.

3. In an apparatus for perforating films the combination of a punch, a die, a guide-pin for advancing the film, a head on which said guide-pin and punch are mounted, and means for imparting circular movement to said head carrying said punch and said guide-pin, and a reciprocating movement to said die, so as to cause said punch to perforate the film, and said guide-pin to by steps advance the film exclusively by means of said guide-pin.

4. In an apparatus for perforating films the combination of a punch, a die, a guide-pin for advancing the film, a head on which said guide-pin and punch are mounted, said guide-pin being adjustable, and means for imparting circular movement to said head carrying said punch and said guide-pin, and a reciprocating movement to said die, so as to cause said punch to perforate the film, and said guide-pin to by steps advance the film exclusively by means of said guide-pin.

In witness whereof I have hereunto signed my name in the presence of two subscribing witnesses.

ERNST GUSTAV WILHELM DITTMER.

Witnesses:
CARL HEMMINGSEN,
U. BANG.