T. M. FINLEY.

PLANE FOR AIRSHIPS.

APPLICATION FILED APR. 10, 1917.

1,265,639.

Patented May 7, 1918.

2 SHEETS—SHEET 1.

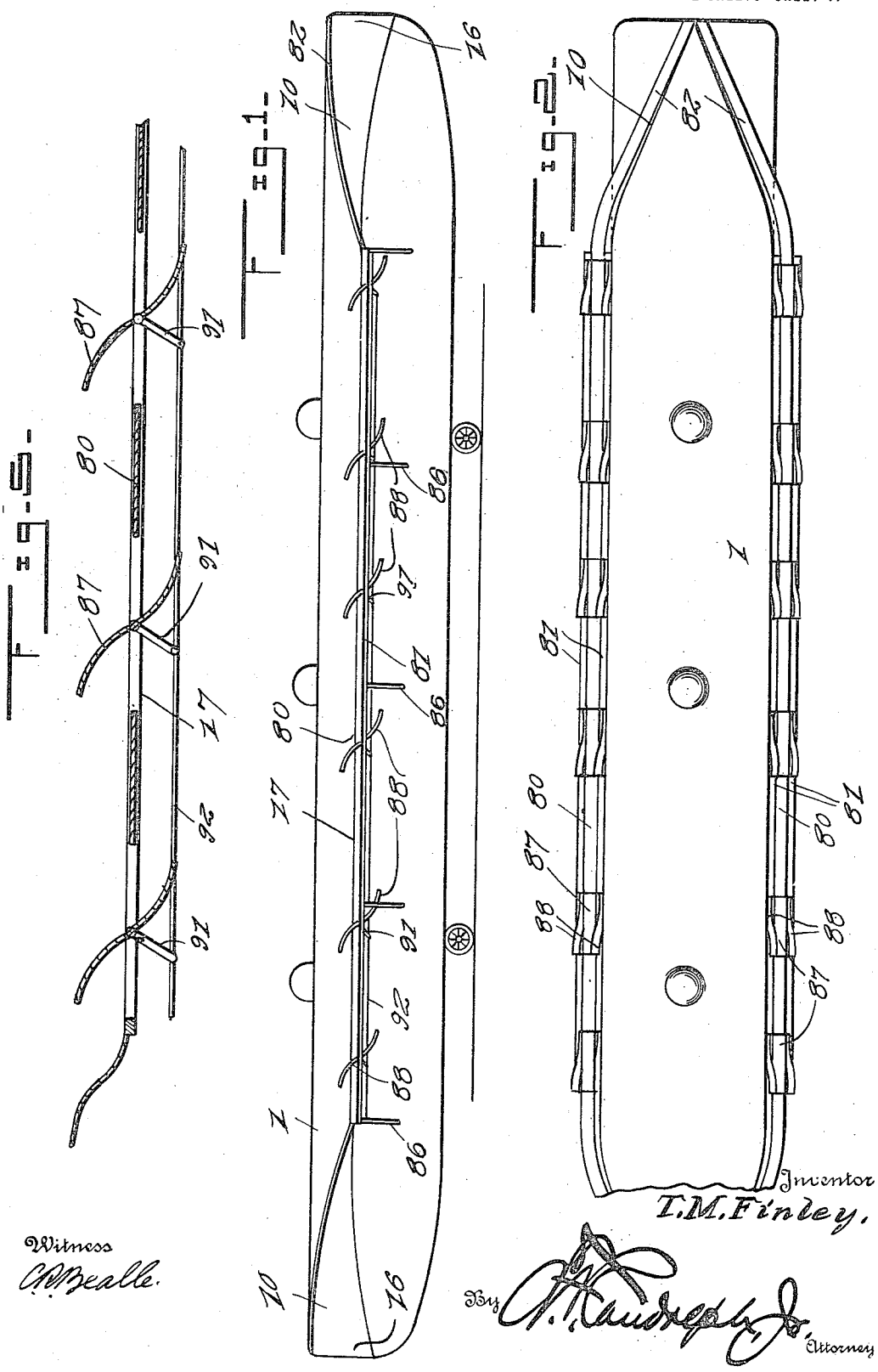

Witness
C. R. Bealle.

Inventor
T. M. Finley.

By [signature] Attorney

T. M. FINLEY.

PLANE FOR AIRSHIPS.

APPLICATION FILED APR. 10, 1917.

1,265,639.

Patented May 7, 1918.

2 SHEETS—SHEET 2.

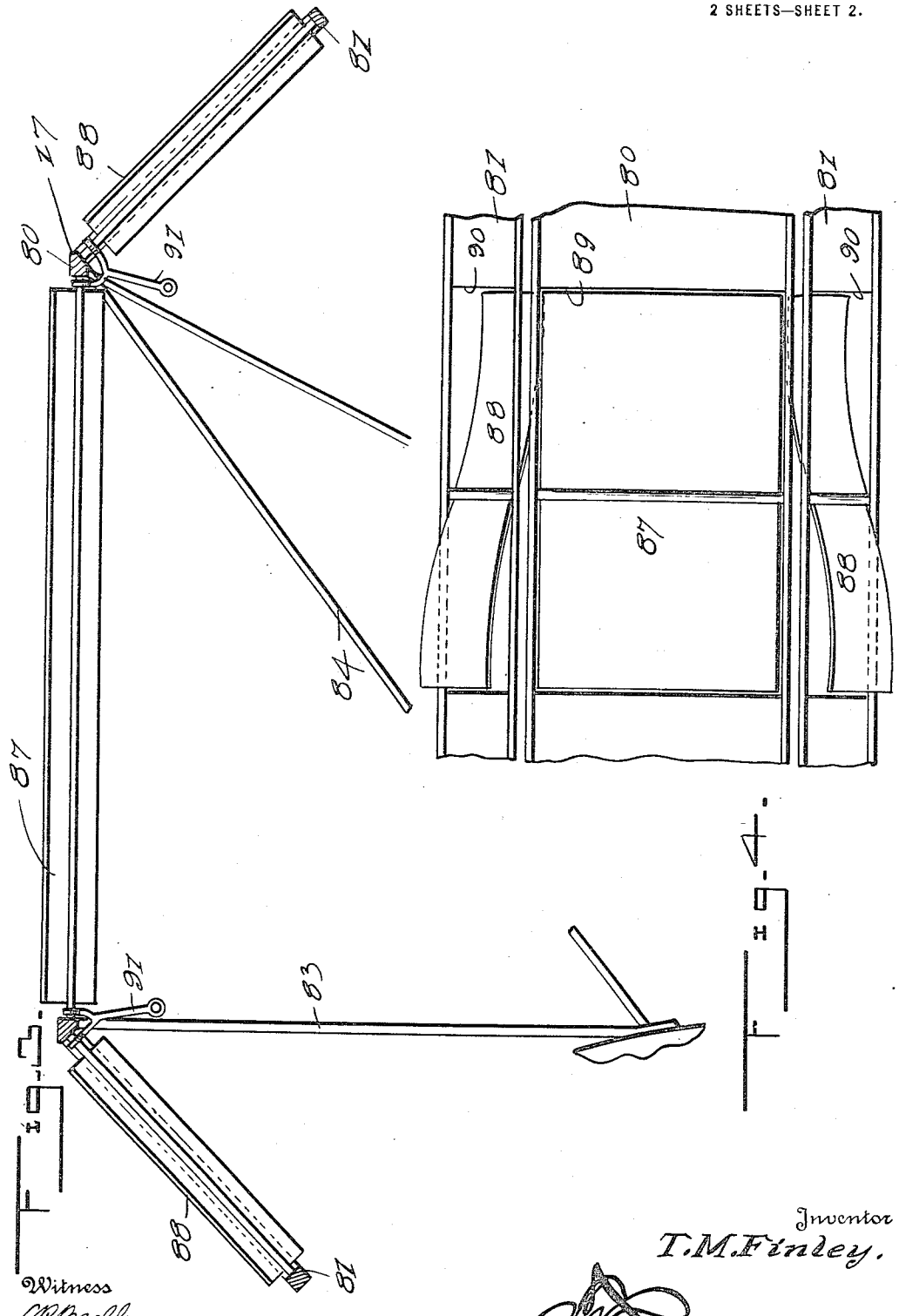

Fig. 3.

Fig. 4.

Witness

C. R. Bealle.

Inventor

T. M. Finley.

By C. F. Kaudregh, Jr.

Attorney

UNITED STATES PATENT OFFICE.

THOMAS M. FINLEY, OF WESTPLAINS, MISSOURI.

PLANE FOR AIRSHIPS.

1,265,639. Specification of Letters Patent. Patented May 7, 1918.

Application filed April 10, 1917. Serial No. 160,979.

To all whom it may concern:

Be it known that I, Rev. THOMAS M. FINLEY, a citizen of the United States, residing at Westplains, in the county of Howell and State of Missouri, have invented certain new and useful Improvements in Planes for Airships; and I do hereby declare the following to be a full, clear, and exact description of the invention, such as will enable others skilled in the art to which it appertains to make and use the same.

The invention relates to improvements in planes for airships, and is a division of an application executed of even date herewith.

The object of the present invention is to improve the construction of airships and to provide side supporting planes adapted to coöperate with the propelling means to assist a heavier than air body to be elevated and also to assist in maintaining the same firm and steady by preventing rolling, pitching or whipping of the airship.

With these and other objects in view, the invention consists in the construction and novel combination of parts hereinafter fully described, illustrated in the accompanying drawings and pointed out in the claims hereto appended; it being understood that various changes in the form, proportion, size and minor details of construction, within the scope of the claims, may be resorted to without departing from the spirit or sacrificing any of the advantages of the invention.

In the drawings:

Figure 1 is a side elevation of an aero-cruiser provided with side planes constructed in accordance with this invention.

Fig. 2 is a plan view of the same.

Fig. 3 is an enlarged transverse sectional view of one of the side planes.

Fig. 4 is a plan view of the same.

Fig. 5 is a longitudinal sectional view of the central member of the side planes.

Like numerals of reference designate corresponding parts in the several figures of the drawings.

In the accompanying drawings in which is illustrated the preferred embodiment of the invention, the hollow body 1, which is constructed as shown and described in the aforesaid application, is equipped at opposite sides with side supporting planes 17 which are acted on by the air divided by the upper portion of the body 1 and traveling along the sides of the upper portion of the same. In this manner the air displaced by the body and directed along the same to the side supporting planes assists in sustaining the body instead of simply retarding or resisting the forward movement of the same through the air.

The side supporting planes 17 are composed of central horizontal members 80 and inner and outer inclined side members 81 extending downwardly and outwardly and downwardly and inwardly in diverging relation to provide side longitudinal troughs, which are located at opposite sides of the body and positioned to receive the air divided by the upper tapered section 10 of the said body. The central members of the side planes are provided with upwardly extending inclined terminal portion 82, adapted to deflect the air divided by said section 10 of the body for causing the same to rush beneath the side planes and through the troughs formed by the horizontal central members and the inner and outer inclined members of the said planes. These planes, which are adapted to assist in supporting the body when the same is traveling through the air, also serve to maintain the body in firm equilibrium as they are located above the center of gravity of the body and serve to steady the same and prevent rolling, whipping or pitching. The side planes are supported by vertical and inclined bars 83 and 84 and by suitable braces or stays 86, but any other suitable supporting frame work may of course be employed for this purpose.

The central and side planes are provided with pivoted transversely disposed blades 87 and 88 operating in openings 89 and 90 in the central and side members of the side planes and adapted to be opened and closed. These central and side planes, which are designed to be arranged in sets, are preferably curved in opposite directions at opposite sides of the pivots or pintles and their front portions, which extend upwardly when they are arranged in the position shown in Fig. 5, are adapted to catch the air and force the same downwardly beneath the side planes. The pivots or pintles are provided with arms 91, which extend downwardly and to which are connected suitable operating rods 92. The blades of the central member are designed to be approximately twice the area of the blades of the side members but the relative size of the blades may

of course be varied and the said blades may be operated to extend their front portions above or below the central side members and some of the sets may be extended below and others above to produce an upward passage of the air through some of the openings and a downward passage of the air through other of the openings so that the air at the sides of the body will serve to lock the same in relatively rigid stability and thereby counteract any tendency of the body to roll or pitch. When the pivoted blades of the central and side members of the side planes are closed they close the openings of the said side planes. The inclined side members will be braced and supported at intervals by any suitable means.

The air, which is divided by the sharp top portion of the body and sent around the sides of the same, reaches the side planes with its density increased affording the side planes increased power. The side planes arrest the air in its natural rush toward the thin air at the crest or top of the body and force the air downwardly packing the same and causing such air to pack downwardly to the lower edges of the sides of the body so that such air will replace the packed air beneath the body and produce a rush of air around the side edges of the body, and this action is intensified by the air rushing inward toward the fast moving body when the same is in motion. The friction resisting the forward movement of the bodies of airships is thus largely eliminated and the pressure of the air is utilized in sustaining and facilitating the propulsion of the machine. Also by the tendency of the side planes to condense or pack the air beneath them they ride at all times on heavy streams of air. The blades, when open, draw the air from above and not only lighten the air at the crest of the body but they also serve to arrest the heavy streams of air that rush around the ends of the body and flow toward the space of the thin or light air at the top of the machine, forcing such streams backward and downward and causing the air in such packed condition to flow around the side edges of the body. These streams of heavily packed or condensed air flowing in great quantity around the lower edges of the airship will hold the airship firmly in proper position and afford the body increased steadiness in flight and render the airship stable and safe.

The inclined terminal portions 82, which consist of extensions of the central horizontal members of the side planes, are curved longitudinally and extend upwardly and forwardly converging along the tapered top sections of the body 1 of the airship to the front edge 16 of the said tapered top section 10. This will effectually prevent the air divided by the tapered section 10 of the body from passing upwardly over the side planes. The length and arrangement of the terminal portions may be varied but it is preferable to construct them as shown and extend them to the ends of the body. A pair of longitudinal troughs is illustrated in the drawings, but the number and arrangement of the troughs or longitudinal planes may be varied.

What is claimed is:

1. An airship of the class described including a body having a tapered end portion, and side troughs arranged exteriorly of the body at opposite sides thereof and having terminal portions converging along the tapered end portion of the body.

2. An airship of the class described including a body having a tapered end portion, and side troughs arranged exteriorly of the body at opposite sides thereof and having terminal portions inclined upwardly from the troughs and converging along the tapered end portion of the body.

3. An airship of the class described including a body having tapered end portions, and side troughs located at opposite sides of the body and provided with inclined terminal portions extending upwardly from the troughs and converging to the ends of the body at the tapered portions thereof.

4. An airship of the class described including a body having a tapered end portion, and horizontally disposed longitudinal side troughs located at opposite sides of the body and composed of horizontal top portions and inner and outer inclined side portions, said troughs being provided with inclined terminal portions forming extensions of the said horizontal top portions of the troughs and extending upwardly therefrom and converging along the tapered portion of the body.

5. An airship of the class described including a body, and longitudinal side troughs located at opposite sides of the body and having inclined terminal portions extending upwardly along the body arranged to direct the air divided by the body to the said troughs.

6. An airship of the class described including a body, and longitudinal side troughs located at opposite sides of the body and having inclined terminal portions extending upwardly longitudinally of the body to the end of the same at the top thereof for directing the air divided by the body to the side troughs.

7. An airship of the class described including a body provided with a longitudinal plane forming a trough having top and side walls and located above the bottom of the airship, said longitudinal plane being provided with openings, and blades movably mounted in the openings and adjustable to direct the air through the same.

8. An airship of the class described including a body provided with a longitudinal plane forming a trough having top and side walls and located above the bottom of the airship, said longitudinal plane being provided with openings, and pivoted blades mounted in the openings and adjustable to direct the air upwardly or downwardly through the said openings.

9. An airship of the class described including a body provided with a longitudinal plane forming a trough having top and side walls and located above the bottom of the airship, said longitudinal plane being provided with openings, and pivoted blades mounted in the openings and adjustable to direct the air upwardly or downwardly through the said openings and being of a size to close the openings and form parts of the said plane.

10. An airship of the class described including a body provided with a longitudinal plane forming a trough having top and side walls and located above the bottom of the airship, said longitudinal plane being provided with openings, and blades pivotally mounted in the openings and having front and rear portions reversely curved, said blades being adjustable to direct the air upwardly and downwardly through the said openings.

11. An airship of the class described including a longitudinal plane composed of a horizontal top member and inclined side members diverging downwardly, said members being provided with openings, and blades pivotally mounted in the openings and adjustable to direct the air through the same and also to close the openings.

12. An airship of the class described including a body, side planes located at opposite sides of and extending longitudinally of the body and composed of oppositely inclined side members and a top connecting member, said members being provided with openings, pivoted blades mounted in the openings and adjustable to direct the air through the same and adapted also to close the openings, and means for operating the blades.

13. An airship of the class described including a body having side planes extending longitudinally of the body and composed of oppositely inclined side members and a top connecting member, said members forming troughs and the top connecting member being provided at the front and rear ends of the body with inclined extensions extending to the ends of the body.

14. An airship of the class described including a body having side planes extending longitudinally of the body and composed of oppositely inclined side members and a top connecting member, said members forming troughs and the top connecting member being provided at the front and rear ends of the body with inclined extensions extending to the ends of the body, and pivoted blades mounted in the said members for directing the air upwardly and downwardly through the same.

In testimony whereof I affix my signature in presence of two witnesses.

THOMAS M. FINLEY.

Witnesses:
M. D. LEWIS,
BENNETT S. JONES.