(Model.)

J. R. BODELL.

Miter Machine.

No. 236,978. **Patented Jan. 25, 1881.**

Fig. 1.

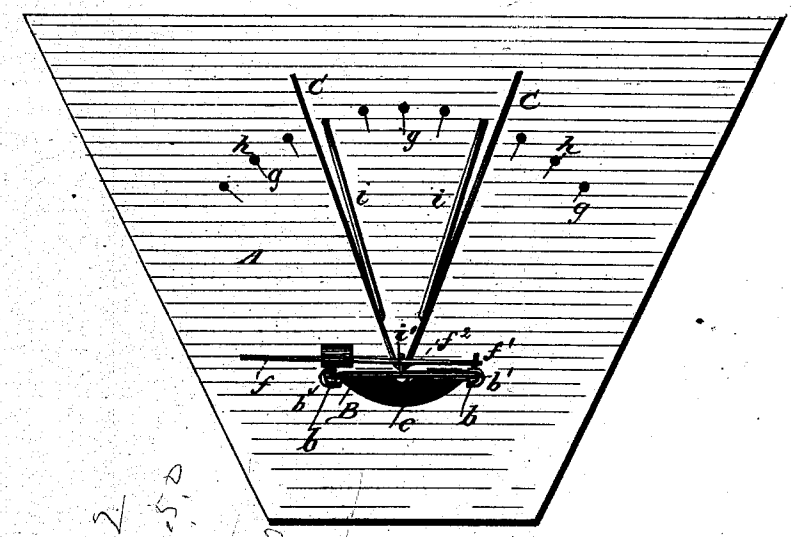

Fig. 2.

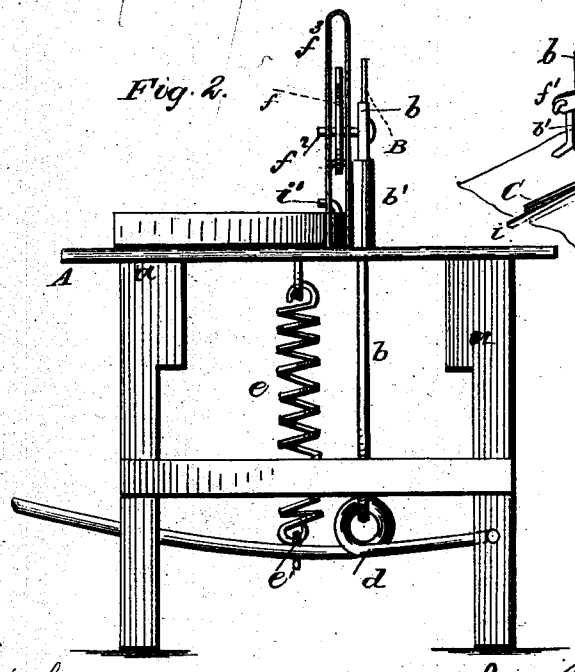

Fig. 3.

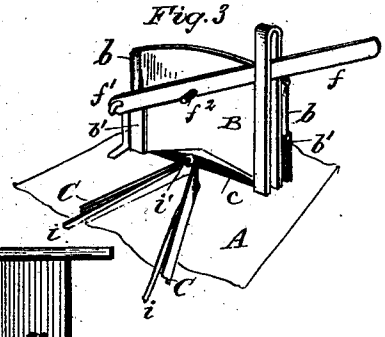

Witnesses
Fred. J. Dieterich
Joseph T. Power

Inventor
Ino. R. Bodell
by Louis Bagger & Co.
Attorneys.

N. PETERS, PHOTO-LITHOGRAPHER, WASHINGTON, D. C.

UNITED STATES PATENT OFFICE.

JOHN R. BODELL, OF NEW SALEM, ASSIGNOR OF ONE-HALF TO JACOB ZOLINGER, OF WALNUT TOWNSHIP, FAIRFIELD COUNTY, OHIO.

MITER-MACHINE.

SPECIFICATION forming part of Letters Patent No. 236,978, dated January 25, 1881.

Application filed July 27, 1880. (Model.)

To all whom it may concern:

Be it known that I, JOHN R. BODELL, of New Salem, in the county of Fairfield and State of Ohio, have invented certain new and useful Improvements in Miter-Machines; and I do hereby declare that the following is a full, clear, and exact description of the invention, which will enable others skilled in the art to which it appertains to make and use the same, reference being had to the accompanying drawings, which form a part of this specification, and in which—

Figure is a plan view of my improved mitering-machine. Fig. 2 is a side elevation of the same, and Fig. 3 is a detail view of the mechanism for operating the knife or cutter by hand.

Similar letters of reference indicate corresponding parts in all the figures.

This invention contemplates improvements in machines for mitering, molding, or pointing pickets for fences or other purpose; and it consists in the detailed construction and combination of parts of a device of that class, as hereinafter described, and particularly pointed out in the claim.

In the accompanying drawings, A indicates the table, suitably supported upon legs *a a* or other support.

B is the knife, which is fixed to and between two uprights or rods, *b b*, guided in ways *b'* fastened to the table, with the knife sliding or moving vertically in an opening, *c*, in the table to permit the knife to cut past the edge formed in the table by said opening. The lower ends of these rods *b* are connected to eyes formed in the side bars of a treadle, *d*, whose rear ends are pivoted in the rear legs of the table, while their forward ends are connected to a cross foot-piece, securing said ends together. An upwardly drawing or acting spring, *e*, has one end attached to a central cross-piece, *e'*, of the treadle, and so acts upon the treadle and knife-rods as to hold the knife in an elevated position, its upper end being attached to the under side of the table. A lever, *f*, hung upon a fixed hooked pin, *f'*, preferably fastened to one of the knife-guides, rests across a lateral stud or projection, f^2, of the knife, and extends through and is guided in its movement by the staple-like guide, f^3, fastened to the table and one of the knife-guides.

The knife may be operated either by the action of the foot upon the treadle or by the action of the hand upon the lever *f*.

The table A is laid off with a series of graduating lines, *g*, radiating from a focal point at the pivotal point of the gages, presently more fully set forth. Each line is punctured or pierced with a perforation, *h*.

C C are the gages, each of which consists of a thin metallic bar or strip having an eye at one end, by which it is pivoted upon the common pintle *i'*, placed in the center of the arc formed by the holes *h h*, and is further provided on its inner side with a spring, *i*, the outer end of which is bent at right angles, so as to form a hook, which may be, by the elasticity of the spring, sprung into any one of the holes *h*. These springs *i*, when so secured, form lateral bearings or supports for their respective gage strips or bars C, against the outer side or face of which the work to be mitered is placed. One gage is to permit of the cutting of a right-hand miter, and the other gage a left-hand miter, as is necessary in carpentry to effect the fitting together or matching of the parts. By these gages and graduations the desired angle or bevel to be cut on the material—molding, panel, or other article—may be obtained by suitably adjusting the gages with relation to the graduated lines on the table.

Having thus fully described my invention, I claim and desire to secure by Letters Patent of the United States—

The combination of the graduated table A, having pintle *i'* and apertures *h*, pivoted gages C, having hooked springs *i*, knife or cutter B, secured between the rods *b*, treadle *d*, and spring *e*, substantially as and for the purpose herein shown and specified.

In testimony that I claim the foregoing as my own I have hereto affixed my signature in presence of two witnesses.

JNO. R. BODELL.

Witnesses:
BENJAMIN F. WILSON,
LEWIS H. YOUTZ.