# United States Patent [19]

**Kobelt**

[11] **3,838,630**

[45] **Oct. 1, 1974**


[54] **DOUBLE-ACTING POSITIONING LINEAR ACTUATOR**


[76] Inventor: **Jack R. Kobelt,** 235 E. 5th Ave., Vancouver 10, British Columbia, Canada



[22] Filed: **Mar. 30, 1973**

[21] Appl. No.: **346,653**

[52] **U.S. Cl.** ..... **92/48,** 92/99, 92/131

[51] **Int. Cl.** ..... **F01b 19/00**

[58] **Field of Search** ..... 92/48, 97, 99, 130, 131, 92/38



[56] **References Cited**

UNITED STATES PATENTS

| | | | |
|---|---|---|---|
| 867,282 | 10/1907 | MacFarren | 92/131 X |
| 1,835,919 | 12/1931 | Waseige | 92/48 X |
| 2,381,259 | 8/1945 | Coffey | 92/48 X |
| 2,529,393 | 11/1950 | Hogue | 92/131 X |
| 2,627,750 | 2/1953 | Titus | 92/38 X |
| 2,671,470 | 3/1954 | Boteler | 92/48 X |
| 3,106,135 | 10/1963 | McAfee, Jr. et al. | 92/131 X |
| 3,683,753 | 8/1972 | Johnson | 92/48 |



*Primary Examiner*—Irwin C. Cohen
*Assistant Examiner*—Abraham Hershkovitz



[57] **ABSTRACT**

This disclosure relates to an infinitely variable double-acting positioning linear actuator which responds proportionally to fluid pressure. The actuator includes a cylindrical housing having a fluid actuating chamber at each end defined by the housing and an axially movable piston means. A center positioning ring is secured axially substantially at the center of the housing. A pair of spring retainer means interface the piston means at each end of the housing and interact compressively with opposite sides of the center positioning ring. A mechanical coil compression spring interacts with the spring retainer means. The piston means are interconnected to the housing by diaphragm means. The spring retainer means are slidably mounted on a positioning actuator rod which interconnects the pistons and extends slidably outside each end of the housing.


**7 Claims, 5 Drawing Figures**

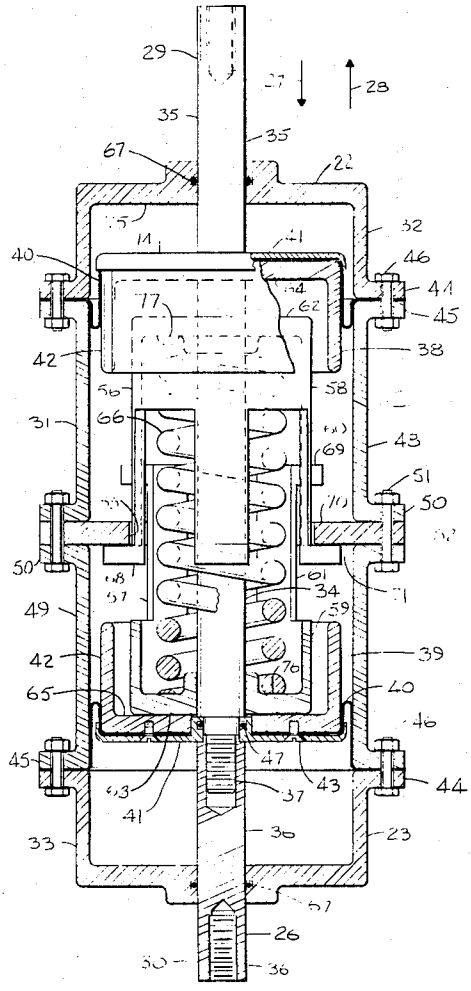

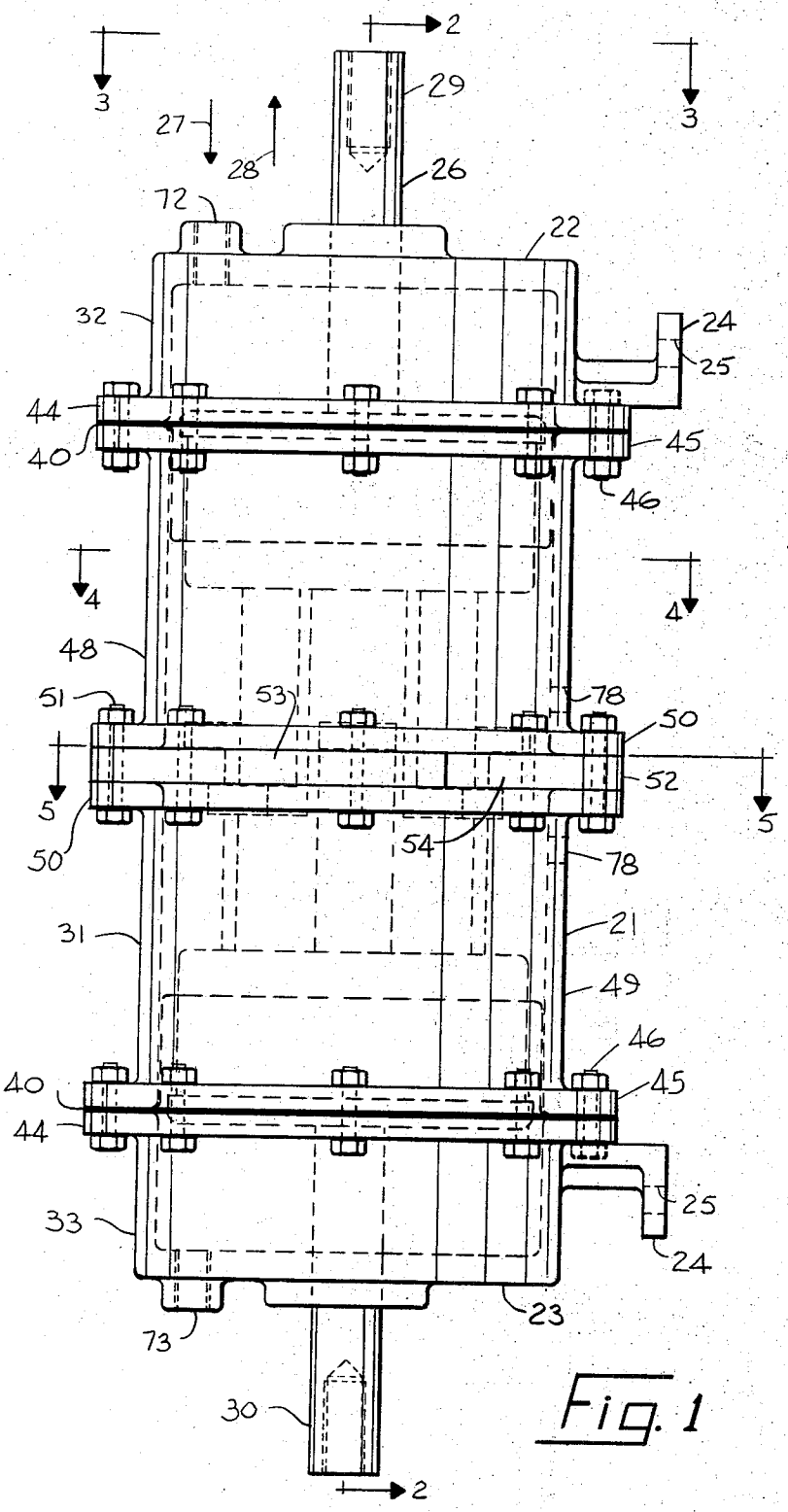
2
3
3
27
28
29
26
72
22
32
24
25
44
40
45
46
4
4
48
51
53
78
50
52
5
5
50
54
78
31
21
49
46
40
45
44
25
24
33
23
73
30
2

Fig. 1

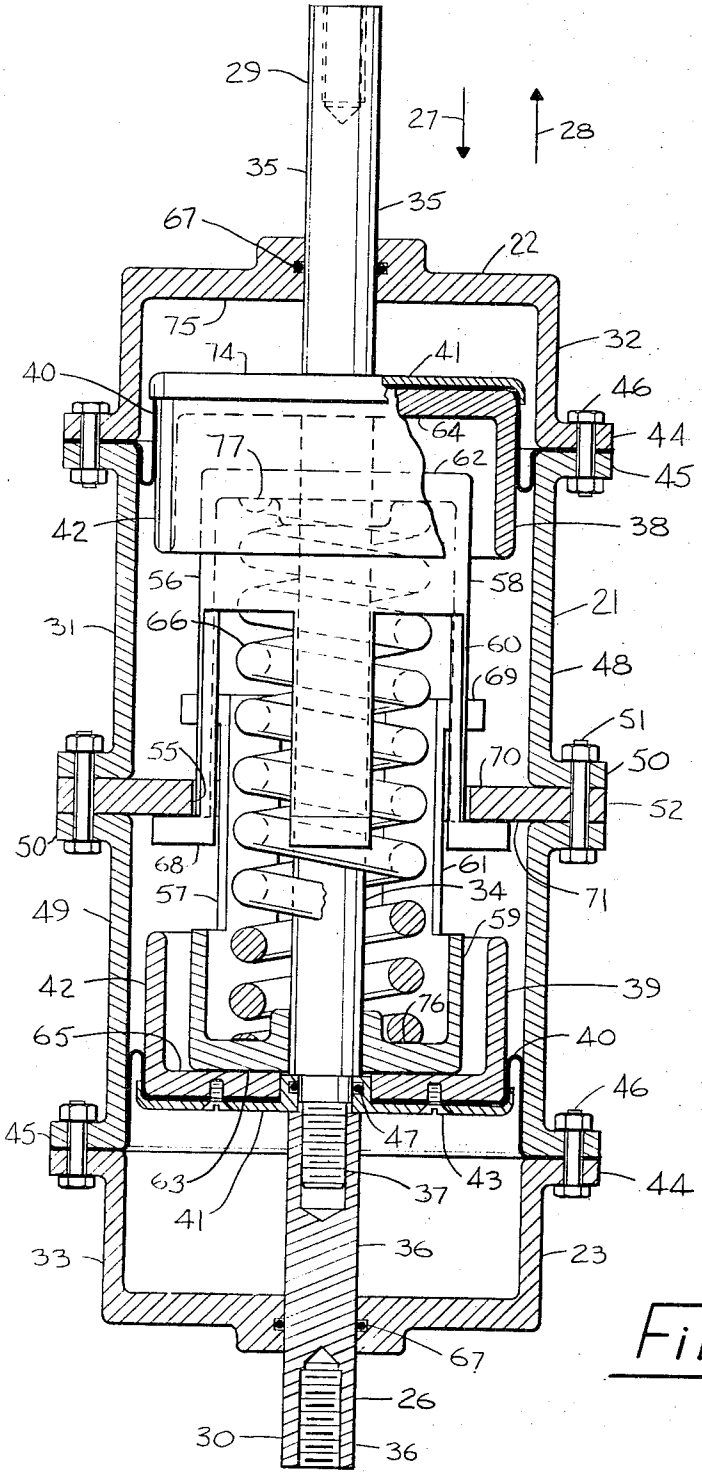
29
27
28
35
35
67
22
75
74
41
32
40
46
64
44
77
62
45
42
38
56
58
21
31
66
60
48
69
51
55
70
50
50
52
68
61
71
57
34
49
59
42
39
76
65
40
46
45
47
63
43
44
41
37
33
36
23
67
26
30
36

Fig. 2

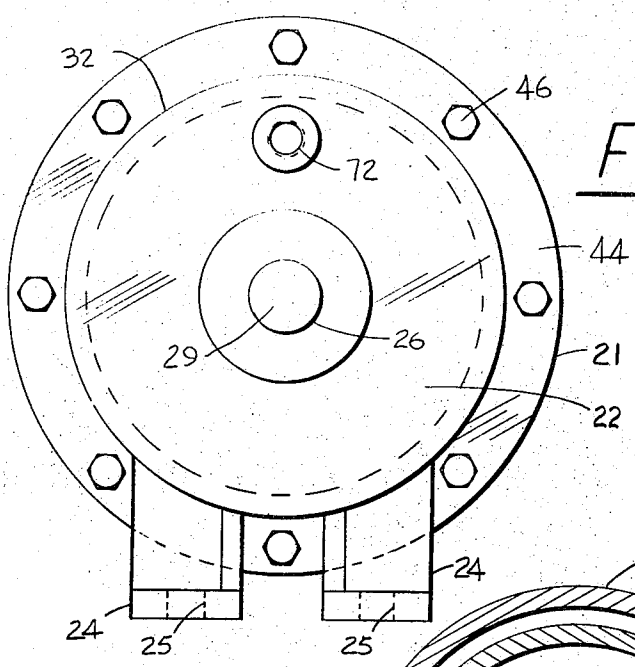


Fig. 3

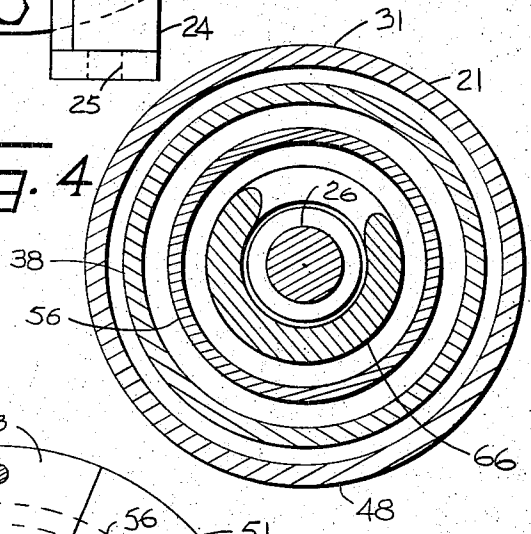


Fig. 4

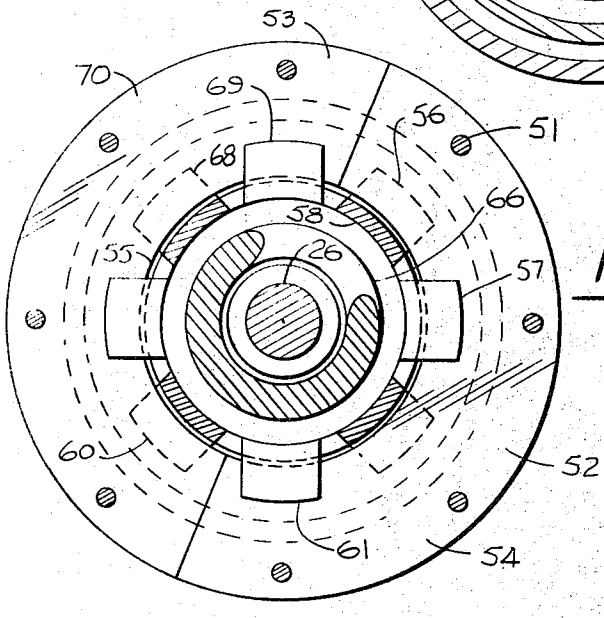


Fig. 5

# DOUBLE-ACTING POSITIONING LINEAR ACTUATOR

## DISCLOSURE

This invention relates to novel improvements in devices which are known in the art to which they pertain as fluid operated linear actuators, or to devices such as hydraulic and pneumatic actuators which are of the general character of linear actuators. Specifically, my invention relates to linear actuators in which fluid acutation is opposed by spring means, thereby providing an infinitely variable pressure proportional linear positioning means. Still more specifically, my invention provides infinitely variable pressure-proportional linear positioning in two axially opposite directions.

In their simplest form, positioning linear actuators comprise a cylinder portion, a piston portion, a rod portion, and a spring means. Fluid power is employed to move the rod and piston portions with respect to the cylinder portion. Where movement of the piston is opposed by a spring means whose force is proportional to deflection, or piston movement, the linear position of the rod and piston will be proportional to the fluid pressure. My invention provides structure whereby a single mechanical spring is interposed between a pair of pistons secured to a rod such that fluid pressure may be applied to either piston to provide double-acting positioning. Further, rolling diaphragms are employed to seal actuation chambers formed between the cylinder portions and piston portions, thereby substantially eliminating hysteresis in low pressure fluid positioning linear actuators. Still further, my invention incorporates a rod which is slidably mounted in the outer end of each actuation chamber thereby providing piston guidance, substantially equal piston pressures, and a double-acting positioning linear actuator assembly which may operatively actuate a device at either or both ends of the assembly.

My invention is adapted for use in devices which require infinitely variable linear positioning in two axial directions. An example of such a device is a controllable pitch propeller requiring infinitely variable forward and reverse positioning and a positive neutral position; controllable pitch propellers often employ a fluid operated servo-mechanism in which a variable volume pump provides or a valve delivery system controls the motive force. Another example of a device where my invention finds use is in any steering system where infinitely variable positioning in two directions is required.

Accordingly, it is one object of my invention to provide a double-acting positioning linear actuator employing a single centering and position proportioning spring means. Another object of my invention is to provide a double-acting positioning linear actuator wherein diaphragm piston-cylinder interconnections substantially eliminate positioning hysteresis. Yet another object of my invention is to provide a double-acting positioning linear actuator assembly whose pistons are secured to a single rod which equalizes piston area, guides the pistons and provides positioning at either one or both ends of the assembly. Still another object of my invention is to provide a double-acting positioning linear actuator having structure which results in economies of manufacture and simplicity of maintenance. These and further objects of my invention,



which reside in its details of structure and operation, will be evident from a study of the following disclosure and accompanying drawings which illustrate my now preferred embodiment of the invention. This embodiment is merely exemplary and is not intended to detract from the full scope of the invention as set out of the annexed claims.

In the drawings, wherein like numerals refer to like parts:

FIG. **1** is a side elevation showing the overall outer structure of my invention;

FIG. **2** is a sectional view of my invention taken substantially along line **2—2** in FIG. **1**, and illustrates the inner structure of my invention;

FIG. **3** is an end view of my invention taken substantially along line **3—3** in FIG. **1**;

FIG. **4** is a sectional view of my invention taken substantially along line **4—4** in FIG. **1**;

FIG **5** is a sectional view of my invention taken substantially along line **5—5** in FIG. **1.**

Turning now to the drawings, FIGS. **1** and **3** illustrate the exterior of my invention wherein a cylindrical housing means **21** comprises a first end-portion **22** and a second end-portion **23.** Housing means **21** may be operatively mounted on a frame or base (not shown) by means of foot members **24** having holes **25.** Actuation rod means **26** is slidably mounted in the end-portions **22** and **23** for axial movement, substantially parallel to the central axis of housing means **21** and rod means **26,** in either direction **27** or **28.** An actuated device may be connected operatively to either one or both ends **29** and **30** of rod means **26** by means of threaded holes **31.**

With reference now to all of FIGS. **1 – 5,** it will be seen that housing means **21** comprises spring chamber portion **31** axially interposed between actuation chambers **32** and **33.** Actuation rod means **26** comprises spring section **34** and outer sections **35** and **36** interconnected by screw thread **37.** Pistons means **38** and **39** secured axially by the threaded interconnections respectively between rod portions **34** and **35,** and rod portions **34** and **36.** Piston means **38** and **39** include rolling diaphragm means **40** secured between piston cover plate **41** and piston body **42** by means of screws **43.** Diaphragms **40** are secured to housing **21** by means of actuation chamber flanges **44,** spring chamber flanges **45,** and bolts **46.** Piston cover plate **41** is sealed by sealing means **47** to prevent fluid flow from chambers **32** and **33** into spring chamber **31.** Sealing means **67** prevents fluid flow from chambers **32** and **33** to the exterior of housing **21.**

Spring chamber portion **31** comprises two flanged sections **48** and **49** having central flanges **50.** Secured between flanges **50** by bolts **51** is centering means **52** comprising split ring segments **53** and **54** extending radially inward to a diameter indicated by inner cylindrical surface **55.** Slidably mounted on rod means **26** are a pair of spring retainer means **56** and **57,** comprising cup portions **58** and **59,** each on one side of centering means **52,** and a plurality of centering members **60** and **61,** respectively, spaced about the outer circumferences of cups **58** and **59** and extending through centering means **52.** Cup portions **58** and **59** are adapted respectively for compressive axial contact between surfaces **62** and **63** and surfaces **64** and **65** of piston means **38** and **39.** Centering members **60** and **61** are adapted respectively for compressive axial interaction between

sides 62 and 63 of centering means 52 and are adapted to mesh axially whereby to permit axial movement of one of retainer means 56 and 57 with respect to the other. A compressive spring means 66 is interposed between retainer means 56 and 57, such that the spring retainer means are forced respectively against pistons 38 and 39. Spring means 66 comprises a precision mechanical coil spring through the coils of which rod portion 34 passes.

Operation of my invention may now be considered with reference to FIGS. 1 and 2. When fluid pressure in chambers 32 and 33 is less than that required to overcome the force of spring means 66, member portions 68 and 69 of members 60 and 61 respectively will be forced against sides 70 and 71 of centering means 52. Fluid entering actuation chamber 33 through inlet ports 72 and 73, such that the force of spring means 66 is overcome, will cause piston 39 to move in direction 28. Whereas member portions 68 hold retainer 56 and end 77 of spring 66 with respect to centering means 52 and housing 21, portions 69 will be carried in direction 28 by piston 39 into a position away from side 70 of centering means 52, just as shown in FIG. 2. The higher the subsequent pressure in chamber 33, proportionately further in direction 28 piston 39 and retainer 57 will move, until ultimately surface 74 of piston 38 bottoms out against surface 75 of chamber 32. Conversely, if the fluid from chamber 33 is now exhausted and fluid pressure applied to chamber 32, portions 69 will hold end 76 of spring 66 and retainer 56 will be carried with piston 38 in direction 27.

Hence, equal pressures in chamber 32 and 33 will cause rod 26 to be centered, a higher pressure in chamber 32 than in chamber 33 will cause rod 26 to move in direction 27, and a higher pressure in chamber 33 than in chamber 32 will cause rod 26 to move in direction 28. The distance moved from the center position in either direction 27 or 28 will be directly proportional to the fluid pressure differential between chambers 32 and 33. When the pressure in chambers 32 and 33 are returned to zero or an equal pressure, such as atmospheric pressure, rod 26 will consistently return to a center or neutral position.

It should be noted that whereas theoretically no change in volume occurs in spring chamber 31 during movement of rod 26, vent holes 78 permit fluid leakage for whatever reason into chamber 31, from either of chambers 32 and 33, to escape (see FIG. 1).

It is believed that my invention of a double-acting positioning linear actuator will have been clearly understood from the foregoing detailed description of my now preferred and illustrated embodiment. Various modifications, changes, additions, and equivalents may be resorted to in view of these teachings by one skilled in this art without departing from the spirit of my invention. For instance, split centering ring 52 might readily comprise a plurality of members extending radially into chamber 31; conversely, member portions 68 and 69 might readily extend through slots in the cylindrical surface of chamber 31 thereby eliminating the need for inward radial projections in chamber 31. Member portions 68 and 69 might be removable, adjustable, or otherwise operatively secured to spring retainer means 56 and 57. Spring retainer means 56 and 57 might be telescopically inter-related, slots being provided operatively for member portions 68 and 69. Spring means 66 might readily comprise a plurality of spring means spaced about rod portion 34. Therefore, whereas a choice between such variations, modifications, changes, additions, and equivalents falling within the true scope of my invention will depend largely upon the circumstances in which my invention is used, it is my express intention that no limitations be implied and that the hereto annexed claims be given the broadest interpretation to which the language fairly admits.

The embodiments of the invention in which an exclusive property or privilege is claimed are defined as follows:

1. A double-acting positioning linear actuator comprising a cylindrical housing having first and second end-portions, an actuation chamber in each of said end-portions, a spring chamber portion interposed axially between said actuation chambers, an actuating rod means slidably mounted in at least one of said end-portions for axial movement substantially parallel to the central axis of said cylindrical housing, in each of said actuation chambers a piston means operatively secured to said actuating rod means, a centering means secured to said spring chamber portion, a pair of spring retainer means slidably mounted on said actuating rod means between said piston means, compressive spring means between said pair of spring retainer means, each of said pair of spring retainer means comprising a cup portion and a centering portion, said centering means comprising a ring extending radially into said spring chamber portion, said cup portion interacting compressively with said piston means in said one of said end-portions, said centering portion extending through said ring and interacting with a portion of said ring facing said other of said end-portions to limit the extent of outward movement of said cup portion, whereby fluid pressure in one of said actuation chambers compresses said spring means and causes said piston means and said actuating rod means and one of said pair of spring retainer means to move axially with respect to said cylindrical housing means.

2. A double-acting positioning linear actuator as defined in claim 1, wherein at least one of said piston means is slidably mounted in said cylindrical housing means, seal means adapted substantially to prevent fluid flow axially between one of said actuation chambers and said spring chamber portion.

3. A double-acting positioning linear actuator as defined in claim 1, wherein at least one of said piston means is secured axially to said actuating rod means, there being a clearance between the outer cylindrical surface of said piston means and the inner cylindrical surface of said actuation chamber, rolling diaphragm means operatively connected to said piston means and said cylindrical housing means, said actuating rod means extending outside each end of said cylindrical housing means.

4. A double-acting positioning linear actuator as defined in claim 3, wherein at least one of said actuation chambers has an assembly flange, said spring chamber portion comprising two flanged sections, said centering means comprising a ring operatively secured between interfacing flanges of said two flanged sections and extending radially into said spring chamber portion, said rolling diaphragm means operatively secured between one flange of one of said flanged sections and said assembly flange.

5. A double-acting positioning linear actuator as defined in claim 1, wherein each of said cup portions on

one side of said centering means and said centering portion comprising a plurality of centering members extending axially to the other side of said centering means, said plurality of centering members of one of said sping retainer means meshing axially with said centering members of the other of said spring retainer means, each of said centering members in operative compressive relation with said centering means.

**6.** A double-acting positioning linear actuator as defined in claim **1,** wherein said compressive spring means comprises a single mechanical coil spring, said actuating rod means passing through the coils of said mechanical coil spring.

**7.** A double-acting positioning linear actuator comprising a cylindrical housing means having first and second end-portions, an actuation chamber in each of said end-portions, a spring chamber portion interposed axially between said actuation chambers, an actuating rod means slidably mounted in each of said end-portions, in each of said actuation chambers a piston means operatively secured to said actuating rod means, a centering means secured to said spring chamber portion, slidably mounted on said actuating rod means between said piston means a pair of spring retainer means having a cup portion and a centering portion, said cup portion on one side of said centering means and said centering portion comprising a plurality of centering members extending axially to the other side of said centering means, said plurality of centering members of one of said spring retainer means meshing axially with said centering members of the other of said spring retainer means, each of said centering members in operative compressive relation with said centering means, a compressive spring means between said pair of spring retainer means, whereby fluid pressure in one of said actuation chambers causes said piston means and said actuating rod means and one of said pair of spring retainer means to move axially with respect to said cylindrical housing means.

* * * * *