Dec. 13, 1949 C. W. SIMONSEN 2,491,139

CLOSURE FOR CYLINDRICAL FILTER CASES

Filed May 21, 1947

Fig 1

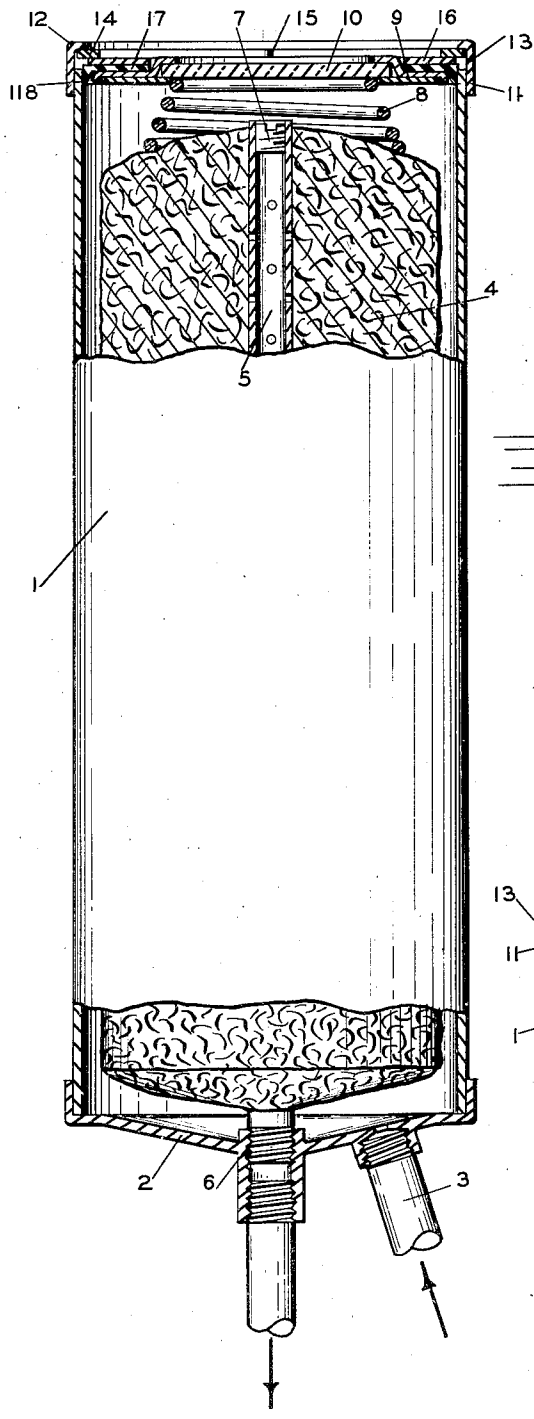

Fig 2

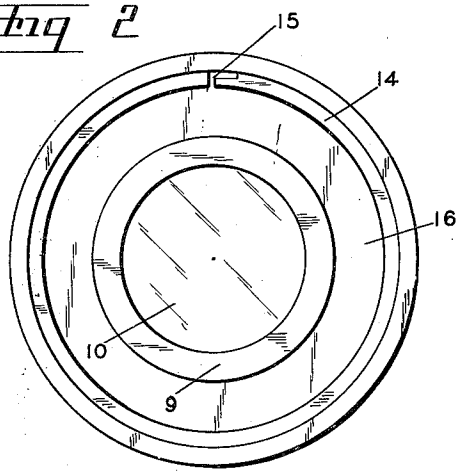

Fig 3

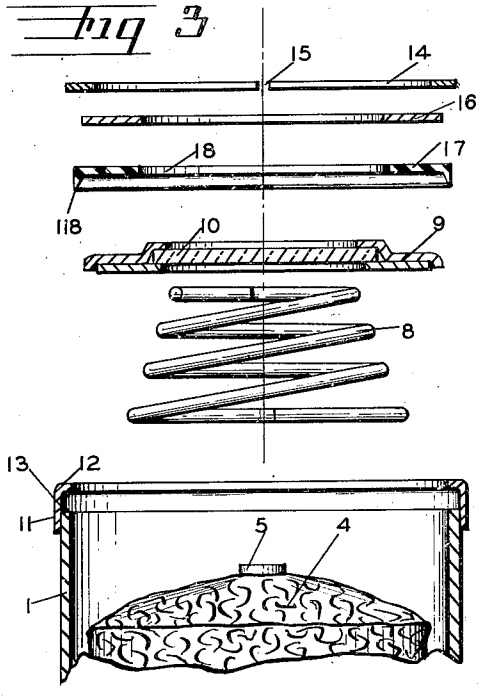

Fig 4

INVENTOR.
CHARLES W. SIMONSEN

BY

ATTORNEY

Patented Dec. 13, 1949

2,491,139

UNITED STATES PATENT OFFICE

2,491,139

CLOSURE FOR CYLINDRICAL FILTER CASES

Charles W. Simonsen, Denver, Colo.

Application May 21, 1947, Serial No. 749,610

1 Claim. (Cl. 220—46)

1

This invention relates to closure means for a filter case or the like, where space is limited and where tightness automatically available upon assembly is imperative.

The objects are high efficiency, low cost, ease of assembly and opening up and long life of parts. It is especially useful when used with a top window here shown but not claimed, but which is claimed in my earlier co-pending application for "Windowed filter case," Serial No. 648,312, filed February 18, 1946, of which this application is a continuation-in-part.

A drawing accompanies and forms a part hereof in which:

Fig. 1 is an elevation of a complete filter case partly sectioned to show a filter cartridge;

Fig. 2 is a top view of Fig. 1;

Fig. 3 is a "blow-out group" with a centerline illustrating the order with which they are assembled in the top of the case, and;

Fig. 4 is a section of the case without the closure elements.

Further describing the drawing. Numeral 1 indicates a cylindrical case, 2 is a bottom, shown welded on 3 is a supply pipe for forcing oil through a filter cartridge 4, from the outside inwardly towards the perforated pipe 5, from whence it returns to a crank case by gravity.

The perforated pipe 5 lends stability to the filter cartridge 4 by being screwed into a socket 6 on the inside of the bottom 2, and is plugged at the top by a plug 7. The cartridge 4 serves the additional purpose of a base support for the compression spring 8 which bears resiliently against the underside of the top closure plate 9 which contains a window 10.

The case 1 is equipped with an annular ring 11, welded on. The open end of the ring 11 is inturned at 12 to about the same diameter as the inside of the case 1 and the ring 11 is only partly pushed over the end of the case 1 leaving a groove 13, which serves as a seat for the snap-ring 14 which is open at 15. The snap-ring 14 normally enters the groove 13 to lock the annular plate 16 against blowing out. The annular plate 16 serves as a backing plate for the cup-washer 17, which has a central opening 18 to receive the window 10 of the top closure plate 9. The cup-washer 17 will be made of synthetic oil resisting rubber and seals the case 1 by its lip 118 in the well known manner.

It is to be observed that the snap ring is of flattened rectangular cross section, its outside diameter is such that it bottoms in the groove 13 when assembled in the case 1 and its inside diameter is materially less than the outside diameter of the

2

annular plate 16, hence when the parts are assembled the snap ring is in single shear, to resist pressure within the case 1, which makes a very strong combination to hold internal pressure and one that is easily assembled and separated.

To assemble the spring 8 is rested on a fresh cartridge 4, the spring 8 is seated thereon, the top closure plate placed on the small end of the spring, the cup washer on top of the cover plate, the annular plate 16 follows providing a seal plate for the cup washer, then some tool or merely the fingers pass through the snap-ring 14 to compress the assembly of parts shown in order in Fig. 3 onto the spring 8 enough so that the snap-ring 14 can be neatly compressed and placed within the groove 13 whereupon the filter case is sealed in operable condition. It can easily be opened by reversing the order of assembly. Since the presence of a filter cartridge such as 4 is a prerequisite to assembly it cannot be sealed without it.

This closure device is believed to have substantial advantages over any of the many previously proposed closure structures to satisfy the stated objects of the invention.

Having fully disclosed my invention so that those familiar with the relatively simple art involved can make and use it, what I claim as new and desire to secure by Letters Patent is:

A closure for the open end of a cylindrical filter case or the like, having an inner circumferential groove near its open end comprising a plate like circular closure member that slips easily into the open end of the said filter case, a spring for resiliently urging said closure member outwardly, a rubber cup washer fitted over said closure plate, a seal plate that holds the cup-washer in sealing relation to the case and snap-ring means for locking the seal plate against being pushed out characterized by the said snap ring being of flattened rectangular section with an outside diameter that bottoms it in the said circumferential groove, and an inside diameter that is substantially less than that of the said seal plate.

CHARLES W. SIMONSEN.

REFERENCES CITED

The following references are of record in the file of this patent:

UNITED STATES PATENTS

Number	Name	Date
848,493	Redenbaugh	Mar. 26, 1907
2,072,393	Briggs	Mar. 2, 1937
2,089,609	Houghton	Aug. 10, 1937
2,215,537	Bjong	Sept. 24, 1940