April 5, 1949. A. JACOBS 2,466,590

CIRCUIT-ARRANGEMENT ADAPTED TO VISUALIZE DIRECT VOLTAGES ON THE SCREEN OF A CATHODE-RAY OSCILLOGRAPH

Filed March 3, 1947

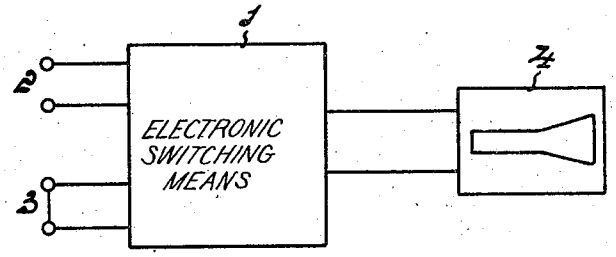

Fig. 1

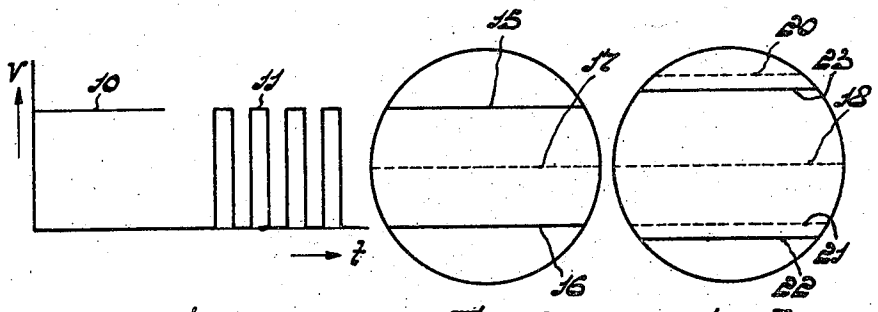

Fig. 2 Fig. 3 Fig. 4

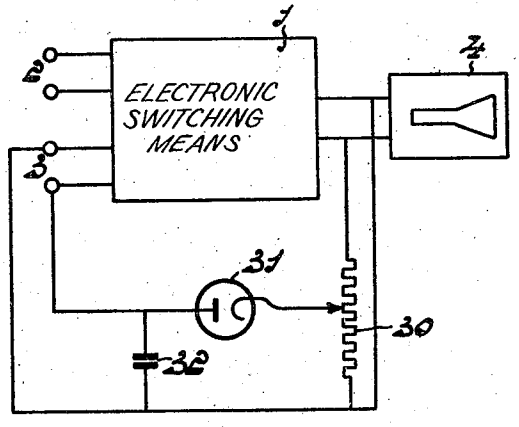

Fig. 5

INVENTOR
ANTHEUNIS JACOBS
BY Lee B. Kemon
ATTORNEY

Patented Apr. 5, 1949

2,466,590

UNITED STATES PATENT OFFICE

2,466,590

CIRCUIT ARRANGEMENT ADAPTED TO VISUALIZE DIRECT VOLTAGES ON THE SCREEN OF A CATHODE-RAY OSCILLOGRAPH

Antheunis Jacobs, Eindhoven, Netherlands, assignor to Hartford National Bank and Trust Company, Hartford, Conn., as trustee

Application March 3, 1947, Serial No. 731,906
In the Netherlands March 5, 1946

2 Claims. (Cl. 315—26)

1

This invention relates to circuit-arrangements adapted to visualize direct voltages, as the case may be of slowly variable value, on the screen of a cathode-ray oscillograph.

In a known type of circuit-arrangement for visualizing direct voltages use is made of an electron switch comprising two channels which are alternately connected to the same set of plates of the oscillograph. The direct voltage is supplied to one channel, the other channel being short-circuited. The electron switch supplies a block voltage the amplitude of which is a measure of the value of the direct voltage. The rhythm in which the electron switch alternately connects the channels to the oscillograph may, without objection, be chosen very high, say, 800 c./sec. The block voltage comprises alternating-voltage components of which the lowest frequency, the fundamental frequency, is 800 c./sec. The oscillograph and the associated amplifier is adapted to reproduce such alternating voltages without deformation. However, in the case of not too slow variations in the value of the direct voltage the circuit-arrangement as described exhibits switching phenomena by which the interpretation of the image visible on the screen is rendered difficult.

The object of the invention is to provide a circuit-arrangement by which the said disadvantage is obviated.

According to the invention, a portion of the output voltage of the electron switch is rectified and supplied, after being smoothed, to the other inoperative channel with a polarity opposite to that of the direct voltage of the first channel.

As will appear hereinafter, the circuit-arrangement according to the invention permits of facilitating correct interpretation of the image visible on the screen owing to the absence of troublesome switching phenomena.

In order that the invention may be more clearly understood and readily carried into effect, it will now be described more fully with reference to the accompanying drawing, in which:

Figure 1 shows the above-described circuit-arrangement of known type.

Figure 2 shows a graph with the aid of which the operation of the circuit-arrangement shown in Figure 1 will be explained more fully.

Figures 3 and 4 show the image which in certain conditions is visible on the screen of the cathode-ray oscillograph of Figure 1.

Figure 5 shows the circut-arrangement according to the invention.

In Figure 1, the electron switch 1 comprises two channels 2 and 3 which are alternately connected to the cathode-ray oscillograph 4 in a rhythm of 800 times per second. The direct voltage to be indicated is supplied to the channel 2, the channel 3 being short-circuited.

2

In Figure 2 the voltage V is plotted as a function of the time t, reference numeral 10 indicating the direct voltage of the channel 2 and 11 the output voltage of the electron switch as supplied to the oscillograph 4. For the sake of simplicity in the case under consideration the output voltage is shown of same amplitude as the direct voltage 10. As a rule, the electron switch 1 will also amplify the voltages so that the amplitude of the block voltage 11 is in this case greater than that of the direct voltage 10.

Figue 3 shows the image produced on the screen of the cathode-ray oscillograph and comprising two parallel lines 15 and 16. The distance between these two lines is a measure of the value of the direct voltage supplied to the channel 2. The lines 15 and 16 are symmetrical with respect to the zero line 17 which is indicated when no voltage is supplied to the channel 2. This symmetrical location is brought about by adjustment of the RC-couplings between the input wires and the plates of the cathode-ray oscillograph 4.

As a rule, one of the lines of the channel 2 and also one of the input wires of the electron-ray oscillograph 4 will be earthed. However, owing to the presence of the said coupling elements the image visualized on the screen is nevertheless symmetrical with respect to the zero line 17 on account of the load on the condensers in the coupling elements. If, now, the direct voltage of the channel 2 suddenly increases by a certain amount, one of the two lines 15, 16 will suddenly be shifted. The image which is then produced is shown in Figure 4 by the lines 20 and 21. The time necessary to ensure again symmetrical location of the image with respect to the zero line 18 is determined by the value of the RC-time of the couplings provided in the oscillograph. This time is, as a rule, very long since the oscillograph must also be suitable for very low frequencies, say, 10 c./sec. Consequently, the lines 20 and 21 displace themselves slowly to their symmetrical adjustment 22, 23. During this switching phenomenon it is difficult to determine whether the direct voltage 2 remains constant, since to this end it is necessary to examine whether the distance between two moving lines remains constant, or that such is not the case.

Figure 5 shows the circuit-arrangement according to the invention, in which the said disadvantage is obviated. The elements correspond-

ing to Figure 1 are indicated by the same reference numerals. A portion of the output voltage of the electron switch is in this case taken from a potentiometer 30. This voltage is rectified by a rectifier 31 and smoothed by a condenser 32. The direct voltage thus produced is supplied to the channel 3 in such manner that its polarity is opposite to that of the voltage of the channel 2. By correct adjustment of the potentiometer 30, or by means of the voltage control for the two coils 2 and 3 which is in most cases provided in the electron switch it may be ensured that the voltages of the channels 2 and 3 are equal. The output voltage of the electron switch is now alternately negative and positive and hence symmetrical with respect to the input wires, which automatically ensures symmetrical location of the picture lines 15 and 16 on the screen of the cathode-ray oscillograph with respect to the zero line 17. Upon sudden variation in the value of the direct voltage it is now not necessary to await the end of the switching phenomenon in the coupling elements in the oscillograph. However, a switching phenomenon now occurs in the filter 30, 31, 32, but the RC-time thereof need only be made long with respect to the switching frequency of the electron switch. Consequently, upon sudden voltage variations in the channel 2 the lines 15 and 16 occupy almost immediately the final position, that is to say the symmetrical position with respect to the zero line.

What I claim is:

1. An electrical circuit arrangement for measuring potential comprising a cathode ray oscillograph, a first input circuit, a second input circuit, an output circuit, electronic switching means to selectively connect said first and second input circuits to said output circuit, means to apply the potential to said first input circuit, means to couple said output circuit to said cathode ray oscillograph, a unilateral conducting element, a smoothing circuit, and a series connection of said unilateral conducting element and smoothing circuit between said output circuit and second input circuit.

2. An electrical circuit arrangement for measuring potential comprising a cathode ray oscillograph, a first input circuit, a second input circuit, an output circuit, electronic switching means to selectively connect said first and second input circuits to said output circuit, means to apply the potential to said first input circuit, means to couple said output circuit to said cathode ray oscillograph, a diode rectifier, a smoothing circuit, and a series connection of said diode rectifier and smoothing circuit between said output circuit and second input circuit.

ANTHEUNIS JACOBS.

REFERENCES CITED

The following references are of record in the file of this patent:

UNITED STATES PATENTS

Number	Name	Date
2,135,171	Chireix	Nov. 1, 1938
2,212,634	Buckingham	Aug. 27, 1940
2,312,761	Hershberger	Mar. 2, 1943