June 7, 1938. A. LEVY 2,119,921

TOY BUILDING BLOCKS, TILES, BRICKS, AND THE LIKE

Filed March 8, 1937

FIG. 1.

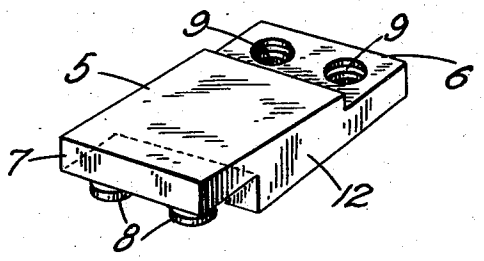

FIG. 2.

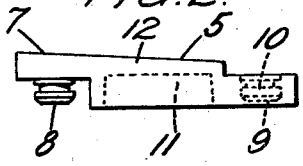

FIG. 3.

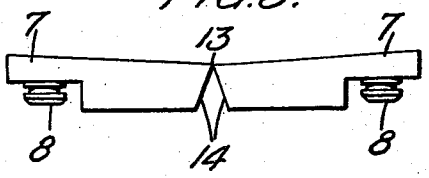

FIG. 4.

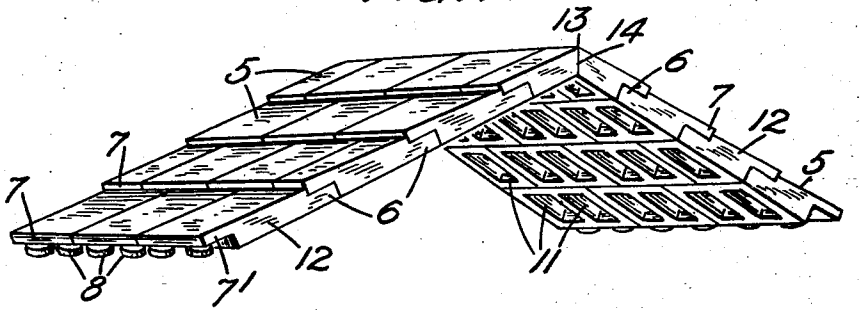

Inventor,
Arnold Levy
By, [illegible] Atty.

Patented June 7, 1938 2,119,921

UNITED STATES PATENT OFFICE

2,119,921

TOY BUILDING BLOCKS, TILES, BRICKS, AND THE LIKE

Arnold Levy, Petersfield, England, assignor to Premo Rubber Company Limited, Petersfield, Hampshire, England

Application March 8, 1937, Serial No. 129,749
In Great Britain March 12, 1936

2 Claims. (Cl. 46—25)

This invention relates to constructional toys employing elements such as bricks adapted to be connected with one another by means of pegs extending between two adjacent elements, at least one of the cooperating parts, i. e. the pegs or the elements themselves, being of resilient material, while the interconnecting pegs are either separate, or alternatively are formed integrally with one of the cooperating adjacent members and are engaged in apertures in the elements.

In the erection of model houses and like buildings from constructional toys of the sort above referred to, although the units lend themselves to considerable variation in arrangement, the size and shape of the finished model has always had to be more or less confined within certain limits owing to the fact that the roof structures have been single units intended just to be placed on top of the erected structure. Quite obviously, it would not be possible at anything like moderate expense to provide a very large number of different single roof units, and consequently the scope for ingenuity on the part of an erector is apt to be somewhat limited, the general tendency being to follow a set plan to suit the few forms of roof variation available.

The present invention seeks to overcome the disadvantages pointed out above, and to this end constructional toys of the kind referred to include separate tile units or groups of tile units provided with interconnecting means for building up into a roof structure. It is preferred for the sake of realism that the roof structure shall be built up from separate tile units each provided at its upper and lower ends with interconnecting means. The tile units preferably will comprise individual tiles each having interconnecting means, but it will be appreciated that a unit may comprise a group of tiles of only one piece but made up to look like separate tiles.

In order that it may be clearly understood and more readily carried into effect, the invention is hereinafter described with reference to the accompanying diagrammatic drawing, in which:

Figure 1 is a perspective view of a single tile unit according to the present invention;

Figure 2 is a side elevation corresponding to Figure 1;

Figure 3 is a side elevation of a ridge tile unit; while

Figure 4 is a perspective view of a small roof section.

As shown with reference to Figures 1 and 2, the separate tile units comprise individual tiles moulded from rubber. The tiles have the actual tile surface 5 cambered or sloped, and at each end thereof stepped substantially flat portions 6 and 7. On the substantially flat portions 6 and 7 are provided the interconnecting means which comprise pegs 8 each of which is formed with an enlarged head to be pressed into an aperture 9. The form of the apertures 9 is more clearly shown in the dotted portion of Figure 2 where the reference numeral 10 indicates a stop bead, the purpose of which is to hold the enlarged head of the peg down in the aperture and prevent inadvertent withdrawal of the peg. Actually, when the peg has been pressed fully home into the aperture 9, a very positive pull is needed to withdraw it. In order to effect substantial saving in the material used, the body of the tile unit is hollowed out as indicated at 11 (Figure 2) in dotted lines, and as shown also at 11 with reference to Figure 4. In spite of the fact that the body is hollowed out, the side flanges 12 (see Figure 1) and the solid flat end pieces 6 and 7 ensure quite a rigid individual tile unit.

Figure 3 illustrates the application of the invention to a ridge tile the general construction of which is somewhat similar to that outlined with reference to Figures 1 and 2. The body part, however, is provided with a transverse line of weakness substantially central, as indicated at 13. The line of weakness is provided by cutting away a wedge-shaped piece in the under surface of the ridge unit. The walls 14 of the wedge-shaped piece preferably are so disposed that when they come together and bear against one another they locate the ridge unit with its tile surfaces properly disposed in relation to each other at the required angular relationship, and if for any reason it is desired to alter the said required angular relationship, it is contemplated that a wedge-shaped piece of rubber may be gripped between the walls 14. Generally, a ridge tile will have the stud-carrying flats 7 at each end, but actually there is no reason why the flats 7 should not have apertures for the reception of studs upstanding from an adjacent unit.

The ridges and the individual tile units may in some cases have interconnecting means such as the pegs and cooperating apertures on the sides as well as at the top and bottom ends. Furthermore, it is contemplated that ridge units may be made up to resemble a plurality of units like that shown in Figure 3, but in fact comprising a single moulded unit. In a similar way, instead of actually having individual tile units, a

group of tiles, or even a whole roof section including the ridge and one or more sloping surfaces, may be moulded in a single piece but made to present the appearance of separate tiles. In fact, the arrangement shown with reference to Figure 4 might well be a section built up from a number of individual tiles and ridges, or it might on the other hand be a moulded section having substantially the appearance of a roof section built up from these individual units. Figure 4 is intended to illustrate the general form which a roof section would take, and makes it clear how the walls 14 cooperate to locate the gable at the right angular relationship, and how the stepped portions fit into one another leaving the interconnecting means, e. g. the pegs 8, for attachment to the remainder of the structure.

The interconnecting pegs and the apertures preferably are so arranged that when a roof section is built up the apertures and pegs of adjacent members are equally spaced so that it is possible to build up the roof sections either in rows or imbricated. Half-tile sections may in some cases be necessary to make the rows even at each end of the roof sections, and such half-sections will in cases where the interconnecting means are arranged in pairs have only one set of interconnecting members.

Assuming the roof section shown in Figure 4 is a complete roof section for attaching to the top of the walls of a finished model, it will be appreciated that there will be a slight angular difference as between the axes of the pegs 8 and receiving apertures therefor in the uppermost bricks of the structure. It may be mentioned that the lowermost peg-carrying flat 1' is sufficiently flexible to bend to allow the pegs proper engagement with their receiving apertures, or alternatively the angular difference may be corrected by forming the uppermost bricks of the walls with correspondingly inclined upper faces.

A roof section built up of separate units such as hereinbefore described is found to possess considerable rigidity, but it is contemplated that where the models have very large roof spans, they may be braced internally.

What I claim is:—

1. A tile unit constructed for use in forming the roof of a toy building and the like, comprising an integral body having a flat lower surface, an upper surface inclined in one direction relative to the lower surface, a first thickness reduction at one end of the body to provide a flat surface below the inclined upper surface, a second thickness reduction at the opposite end of the body to provide a flat surface above the lower surfaces of the body, the shoulder formed by the first thickness reduction being of less height than the similar dimension of the end of the body overlying the second thickness reduction, the flat surfaces of both thickness reductions being on substantially the same plane longitudinally of the body and parallel to the flat lower surface of the body, whereby when the units are assembled in roof form with the second thickness reduction of each unit overlying and interfitting with the first thickness reductions of adjacent units, the end of the unit overlying the second thickness reduction will project above the surface of the immediately adjacent unit to simulate roof formation.

2. A construction as defined in claim 1, wherein the upper flat surface of the first thickness reduction and the lower flat surface of the second thickness reduction are provided with complementary interfitting locking elements to secure the units in roof forming arrangement.

ARNOLD LEVY.