Aug. 29, 1939. J. F. TIMMONS 2,171,134

X-RAY SYSTEM

Filed Aug. 8, 1936 4 Sheets-Sheet 1

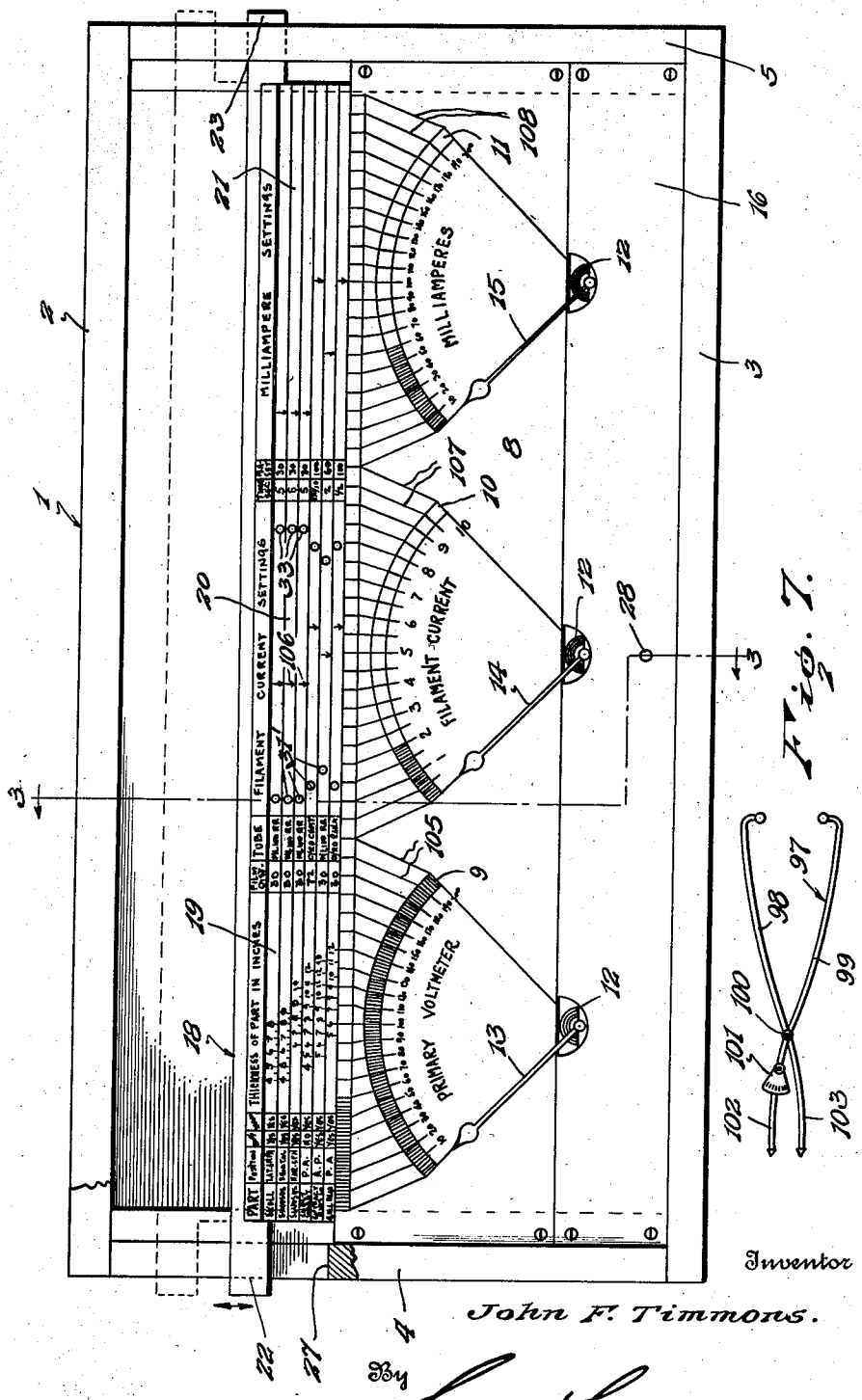

Fig. 1.

Fig. 2.

Aug. 29, 1939. J. F. TIMMONS 2,171,134

X-RAY SYSTEM

Filed Aug. 8, 1936 4 Sheets-Sheet 2

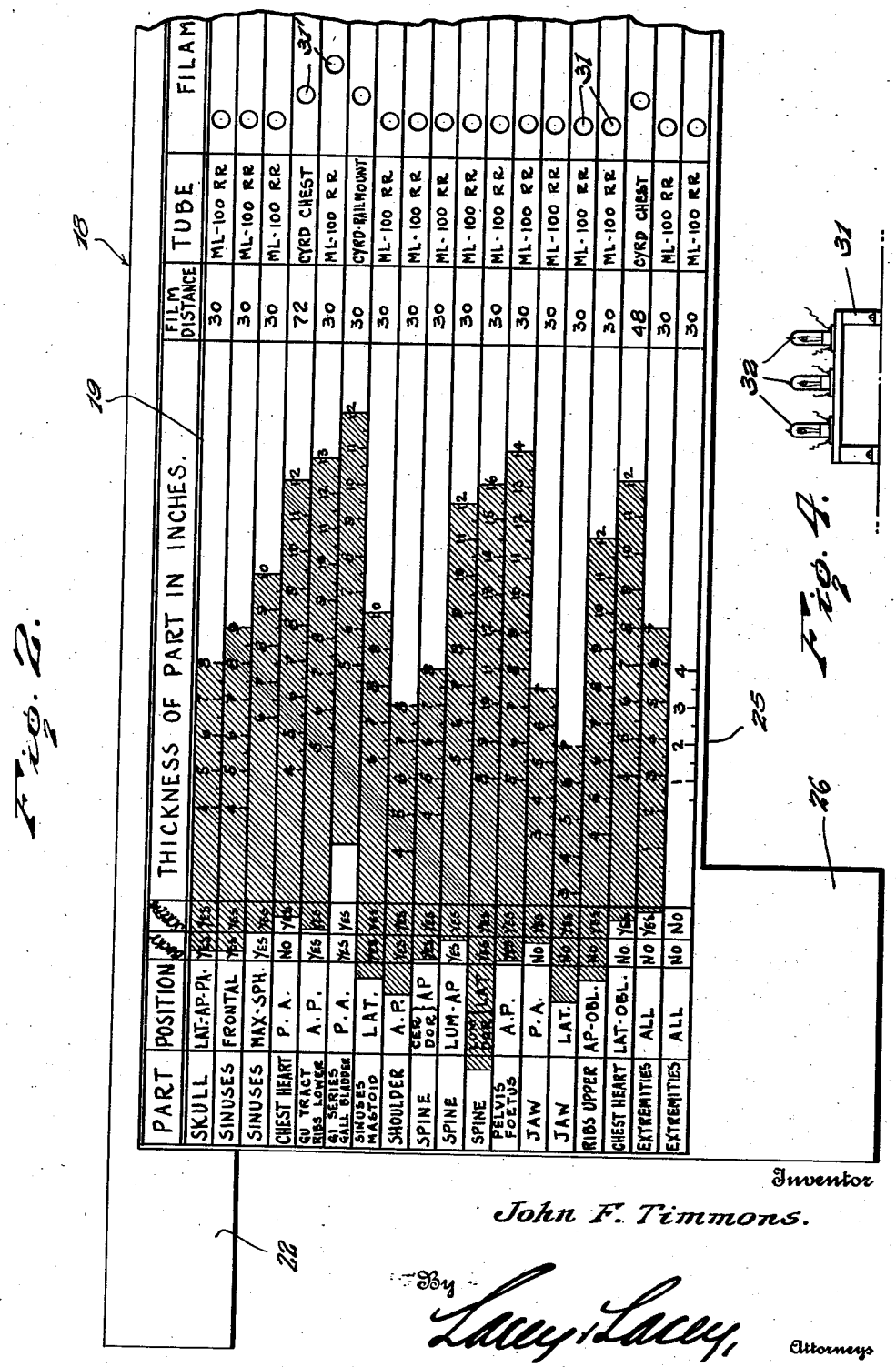

Fig. 2.

Fig. 4.

Inventor

John F. Timmons.

By Lacey & Lacey,

Attorneys

Aug. 29, 1939. J. F. TIMMONS 2,171,134

X-RAY SYSTEM

Filed Aug. 8, 1936 4 Sheets-Sheet 3

Fig. 3.

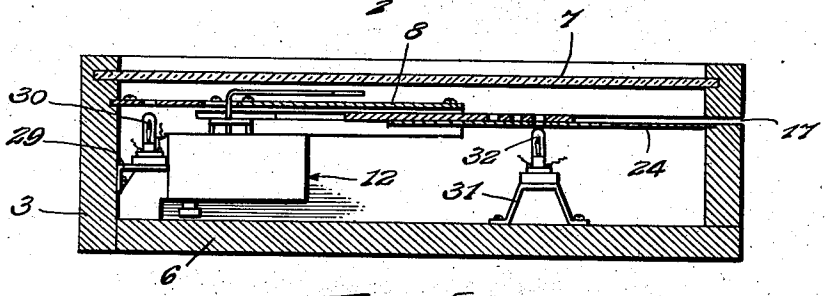

Fig. 5.

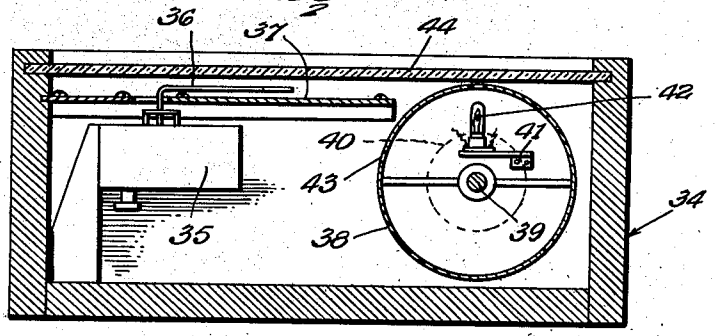

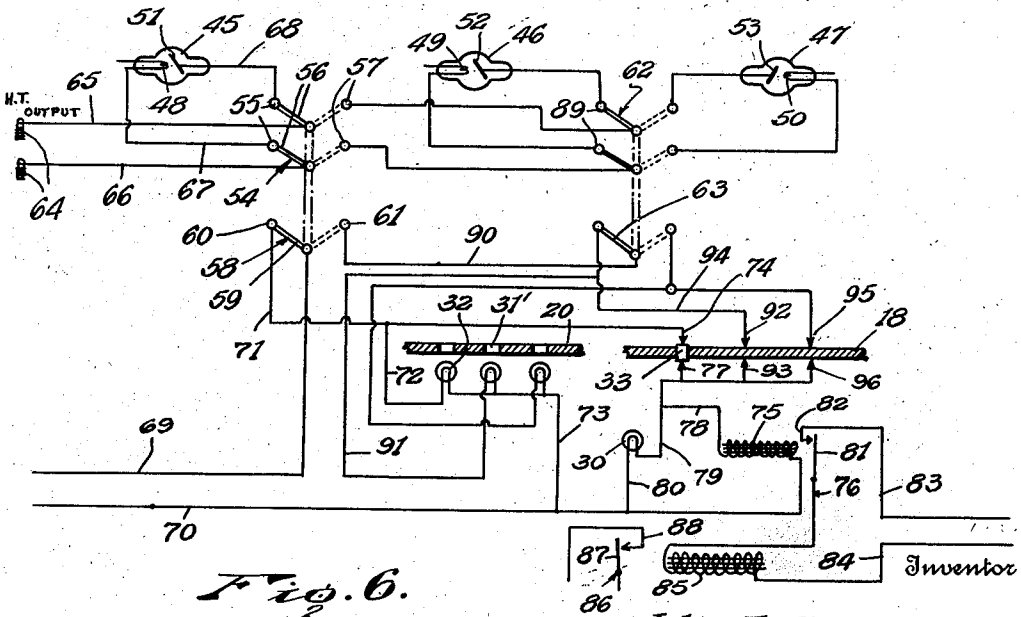

Fig. 6.

Inventor

John F. Timmons.

By Lacey & Lacey,

Attorneys

Aug. 29, 1939. J. F. TIMMONS 2,171,134

X-RAY SYSTEM

Filed Aug. 8, 1936 4 Sheets-Sheet 4

Fig. 9.

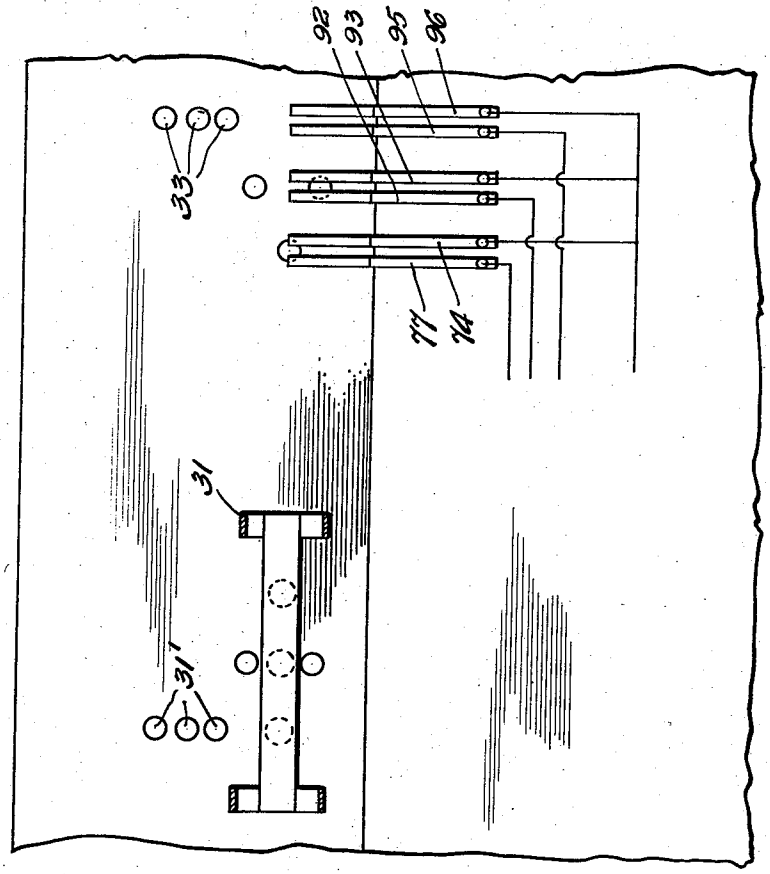

Fig. 8.

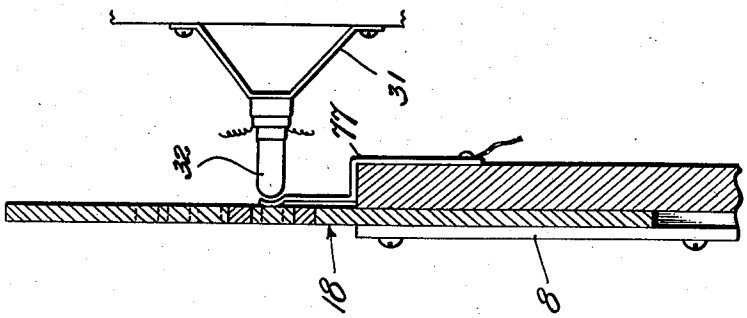

Inventor

John F. Timmons.

By Lacey & Lacey, Attorneys

Patented Aug. 29, 1939 2,171,134

UNITED STATES PATENT OFFICE

2,171,134

X-RAY SYSTEM

John F. Timmons, Rochester, N. Y.

Application August 8, 1936, Serial No. 94,993

7 Claims. (Cl. 250—94)

This invention relates to an X-ray system.

One object of the invention is to provide an X-ray system which will permit the setting of X-ray circuit components and readings for a given X-ray tube by direct measurement of the part of the body to be X-rayed and direct transfer of such measurement to the scale of a volt meter in the primary circuit of the X-ray transformer so that reference to charts, and time consuming calculations, by an X-ray operator, will be avoided.

Another object of the invention is to provide an X-ray system which will embody a plurality of indicating scales and which will employ signal lamps under certain of the scales to cooperate with indicia on said scales for indicating the connection of a given X-ray tube in a circuit for a desired radiographing operation, permitting the application of high tension to the X-ray tube so that protection of said tube will be accorded and mistakes, caused by ignorance of which tube was connected for a desired radiographing operation, with the result of possible destruction of the tube, will be avoided.

Another object of the invention is to provide a system of this character wherein the indicating scales may be shifted with respect to the meter scales for disposing certain of said indicating scales in proximity to certain of said meter scales whereby direct readings may be transferred from certain of said indicating scales to certain of said meter scales.

Another object of the invention is to provide an X-ray system embodying a plurality of meters and scales therefor, and indicating scales adapted to cooperate with said meter scales, said meters and all of said scales being embodied in a single casing.

A further object of the invention is to provide a system of this character embodying a set of calipers which will permit the direct transfer of a measurement of a part of the body to be X-rayed to one of the indicating scales from whence it may be directly read on the adjacent meter scale so that proper setting of the X-ray apparatus, without reference to calculations or charts, may take place.

And a still further object of the invention is to provide an X-ray system embodying indicating scales, one of said scales having contacts thereon which are electrically connected in a circuit with the signal lamps previously referred to so that shifting of the scale will connect the desired signal lamp in the circuit for indicating the presence of a certain X-ray tube in the circuit for a radiographing operation, said contact being adapted to control a relay for breaking the circuit to the primary of the X-ray transformer so that the X-ray tube will not be energized unless the contacts are properly located with respect to each other for completing the primary circuit.

Other and incidental objects of the invention not specifically mentioned hereinabove, will render themselves apparent as the description of the invention proceeds.

Referring now more particularly to the accompanying drawings:

Figure 1 is a plan view, partly shown in section, showing the meter casing of my invention, with the meters and scales therein.

Figure 2 is an enlarged fragmentary plan view of one of the indicating scales employed.

Figure 3 is a vertical sectional view on the line 3—3 of Figure 1, looking in the direction indicated by the arrows.

Figure 4 is a detail plan view showing the brackets employed with the signal lamps thereon.

Figure 5 is a vertical sectional view of a modified form of my invention.

Figure 6 is a diagrammatic view showing the circuit connections for my improved X-ray system.

Figure 7 is a perspective view of the calipers employed in connection with my invention.

Figure 8 is an enlarged fragmentary vertical sectional view showing the manner of mounting certain of the contacts and lamps employed.

Figure 9 is an enlarged fragmentary plan view showing a portion of the rear of the casing and scale board and showing particularly the manner of mounting the contacts and lamps.

Referring to the accompanying drawings, wherein like numerals of reference designate like parts throughout the several views, the numeral 1 indicates in general the meter casing of my invention. The meter casing may be formed of wood, metal, or other suitable material and may be rectangular in shape. The casing includes top and bottom walls 2 and 3, and end walls 4 and 5. A rear wall 6 is adapted to close the rear of the casing and a preferably glass pane 7 is adapted to be removably mounted in longitudinal slots in the top, bottom and end walls of the casing at the front thereof for normally closing the front of said casing. If desired, the pane may extend but half the height of the casing, or may be omitted entirely. The casing 1 includes a longitudinally extending scale board 8 on which are inscribed arcuate scales 9, 10 and 11. The scale board and scales form a part of meter move-

ments indicated in general at 12, in Figure 3, which meters include needles 13, 14 and 15. The needles are, of course, actuated by the movements 12 which are mounted on the rear wall 6 of the casing and project upwardly within said casing in spaced relation to the scale board 8. A signal board 16 is disposed in the casing directly beneath the scale board 8 and both said boards 8 and 16 are completely confined within the end walls 4 and 5 of the casing. The meters 12, as shown best in Figure 1 of the drawings, comprise a primary voltmeter, an ammeter, and a milliammeter. It should be understood that, if desired, other suitable meters may be substituted in lieu of the above named meters and still fall within the scope of my invention. The scale board 8 extends upwardly within the casing to a point substantially medially of the height of said casing.

As best seen in Figures 1 and 3 of the drawings, the upper portion of the casing, including the top wall 2 and the end walls 4 and 5, is provided with a slot 17 which is of a depth substantially equal to half the height of the casing. The slot is disposed parallel to the front and rear walls of the casing and is disposed in a plane in close spaced relation to the board 8, rearwardly thereof. The slot is adapted to receive the indicating scale board 18 to be described in full detail hereinafter. The indicating scale board 18 is, as best seen in Figures 1 and 2, substantially rectangular in shape and is adapted to shift in the slot 17. The indicating scale board 18 extends throughout substantially the entire portion of the interior of the casing and is provided with scales 19, 20 and 21. These scales are adapted to cooperate with the scales 9, 10 and 11 in a manner to be presently set forth. The indicating scale board 18 is provided at its opposite upper end portions with annually engageable shift tabs 22 and 23 which extend through the slot 17 to project exteriorly of the casing. As will be observed from a scrutiny of Figure 1, the indicating scale board may be shifted upwardly and downwardly within the casing by merely manually grasping the shift tabs 22 and 23. The indicating scale board is adapted to be shifted downwardly behind the board 8 and between said board and a guard strip 24, which guard strip is disposed within the casing at the inner extremity of the slot 17. The guard strip 24 serves to protect the rear side of the indicating scale board and also tends to guide said indicating scale board in its upward and downward travel. The scale board is adapted to have its lowermost edge disposed in spaced relation to the movements of the meters 12, when said indicating scale board is in lowermost shifted position within the slot 17, so that interference with the proper functioning of said meter movements will not take place. The indicating scale board is cut away at its lower edge to define a recess 25, seen best in Figure 2, and downwardly projecting portions 26, the recess 25 being adapted to receive the meter movements therein and the downwardly projecting portions being adapted to extend to near the bottom wall 3 of the casing. The lower end of the slot 17 is shown at 27 and defines a stop for the shift tab 22. A stop is also provided at the other end of the casing 1 and is adapted to limit downward shifting movement of the indicating scale board. The signal board 16 is provided with a sight opening 28 which is preferably disposed medially of the length of said signal board. A signal lamp bracket 29 is mounted on the bottom wall 3 and is adapted to receive a signal lamp 30 thereon. The signal lamp is adapted to project its beams through the sight opening 28 when proper electrical connections are made. An indicating lamp bracket 31, best seen in Figures 3 and 4 of the drawings, is mounted on the rear wall 6. The sight openings are arranged in a vertical spaced series at one end of the scale 20. Indicating lamps 32 are carried on the bracket 31 and are adapted selectively to project their beams through one of the openings 31'. Carried at the opposite end of the indicating scale 20 on the indicating scale board 18 is a vertically spaced series of contacts 33.

In the modification of my invention, shown in Figure 5 of the drawings, I employ a casing 34 which is identical in shape in every respect with the casing 1. The casing 34 is adapted to receive meters 35 having needles 36. A meter scale board 37 is provided and is similar to the meter scale board 8. In lieu of the sliding indicating scale board 18, I provide a drum 38 which is adapted to be rotated on a shaft 39 by a handle which is shown in dotted lines at 40. A bracket 41, projecting within the drum, is adapted to receive an indicating lamp 42. Any desired number of these lamps may be employed. The indicating lamp 42 is adapted to project its beams through a sight opening 43 within the drum and said drum is adapted to receive indicia thereon of a similar nature as that carried on the scale board 18. Instead of shifting the scales as is done by raising and lowering the indicating scale 18 in the slot 17 of the preferred form, it is only necessary to rotate the drum 38 for bringing into view the desired scale. It should be understood that the pane 44 which closes the front of the casing 34 should be suitably colored so that the desired scale will be in view at the desired time. Aside from the above noted difference, the modification of my invention is identical in every respect with the preferred form.

Referring now to the diagrammatic view shown in Figure 6 of the drawings, the numerals 45, 46 and 47 indicate X-ray tubes. The tubes are preferably each different from the other and are adapted for use in making radiographs of different portions of the body. The tubes are, of course, preferably of different sizes and formation, although, if desired, they may be of the same size. The tubes are conventional and, therefore, include filaments 48, 49 and 50, and anodes 51, 52 and 53. As it will be generally desired to operate these tubes one at a time, I provide a double pole, double throw high tension switch 54 which includes pairs of contacts 55, blades 56, and oppositely disposed contacts 57. The switch 54 is mechanically connected with a single pole double throw low tension switch 58 which includes a blade 59 and contacts 60 and 61. The high tension switch 54 and the low tension switch 58 may be connected by a suitable fiber bushing, or in any other like manner, it being imperative that the shifting of the blades 56 of the switch 54 cause the shifting of the blade 59 of the switch 58. A double pole double throw switch 62, which is of similar construction to the switch 54, is provided and has mechanically connected therewith a low tension switch 63 which is of the same construction and is adapted to operate in a manner similar to the switch 58.

The numeral 64 indicates a source of high tension energy which is generally obtained from a high tension low frequency transformer. This

high tension output is electrically connected to the blades 56 of the switch 54 by means of conductors 65 and 66. It will be understood that when high tension current is flowing through the conductors 65 and 66, and the blades 56 are in engagement with the contacts 55, the tube 45 will be placed in service, as conductors 67 and 68 connect said contacts 55 with the filament 48 and anode 51 respectively of said X-ray tube 45.

At the same time, a source of low tension is being passed through conductors 69 and 70, the conductor 69 being electrically connected to the arm 59 of the switch 58. When the arm 59 is in engagement with the contact 60, low tension current will flow through said arm 59 and contact 60, through a conductor 71 and another conductor 72 to one of the indicating lamps 32 which is disposed behind the sight opening 31' in the indicating scale 20. All of the lamps 32 are connected to the other side of the low tension supply, represented by the conductor 70, by means of a common conductor 73. The voltage of the low tension supply may be either the conventional 110 volt supply, a 6 volt supply, or any other desired potential. The conductor 71 is projected to engage a contact element 74. The contact element 74 is adapted to close an electric circuit to the coil 75 of a relay 76 through the contact 33 and through a contact element 77 through a conductor 78 to said coil 75. The other side of the coil 75 is connected with the conductor 70. The warning lamp 30 is connected to the conductor 78 by means of a conductor 79 and to the conductor 70 by means of a conductor 80. It will be understood that when the contact 33, which is shiftable on the indicating scale board 18, connects, or short circuits, the elements 74 and 77, the signal lamp 30 and the coil 75 of the relay 76 will be in the circuit. When said relay 75 is energized, an electrical circuit is made between the contacts 81 and 82 of said relay 76 for completing an electrical circuit through conductors 83 and 84 to a relay coil 85 of a heavy duty relay 86. The heavy duty relay has contacts 87 and 88 which are adapted to control the primary input to the high tension transformer of the X-ray machine.

By shifting the switch blades 56 of the switch 54 to engage the contacts 57, the high tension is fed to the switch 62, which is then shifted to engage contacts 89, so that high tension current will be fed to the X-ray tube 46. At the same time, low tension current will be fed through the low tension blade of the switch 63 through conductors 90 and 91 to another of the indicating lamps 32 and thence through the conductor 73 to the conductor 70 for closing the low tension circuit and indicating to the operator that the tube 46 is in the circuit. At the same time, the contact 33 will be shifted to short circuit contact elements 92 and 93 for closing an electrical circuit through the conductor 78 and through a conductor 94 to the coil 75 for closing the primary circuit of the high tension transformer, as previously explained. Shifting of the switch blades of the switches 54, 58 and 62 and 63 to the right hand position will place the X-ray tube 47 in the circuit and will, at the same time, place the third indicating lamp in the low tension circuit and, at the same time, short circuit elements 95 and 96 for closing the relay 76 and energizing the primary circuit of the X-ray power transformer.

It should be clearly understood that, before high tension current may be applied to any of the tubes, the relay contacts 81 and 82 of the relay 76 must be closed by connection of the contact 33 with either the pairs of contact elements 74 and 77, 92 and 93, or 95 and 96. At the same time, the tube in the circuit will be indicated by the indicating lamp 32 which is adapted to project beams through the sight openings 31' adjacent suitable indicia on the scale 20, which indicia will signify the name or type of tube being used. Simultaneously, the signal lamp 30 will be illuminated for making known to the operator the fact that the circuit is ready for a radiograph to be taken.

In order to describe fully how my improved X-ray system will operate in practice, I will describe a typical problem. As will be observed from a scrutiny of Figure 2, the scale 19 is provided with indicia for permitting the measurement of portions of the body to be X-rayed. Let it be supposed that it is desired to X-ray the sinuses from the frontal position, which will appear on line 2 of the scale 19 which is carried on the indicating scale board 18. The shift tabs 22 and 23 are manually engaged and the indicating scale board is shifted downwardly within the slot 17 until the second line from the top, on which the indicia concerning the sinuses is placed, is directly above the upper edge of the meter scale board. When this is done, the thickness of the part to be measured is directly measured from the part itself by means of the calipers shown in Figure 7 of the drawings and indicated in general by the numeral 97. The calipers include arms 98 and 99 which are pivotally connected by a pin 100. The arm 99, in relatively close proximity to the pin 100, at opposite sides from the longer portion of said arm, is cut away and is provided with a correction scale 101. A relatively short arm 102 is pivotally connected with said correction scale. The correction scale 101, which is shown in Figure 7 as part of the calipers 97, is adapted to allow for the varying speed factor of the intensifying screens used with the X-ray apparatus. In practice, the operator or technician would measure the thickness of the part of the body being X-rayed and, before applying the short end of the calipers to the scale 19, would set the correction scale to a figure imprinted on said correction scale corresponding to a predetermined figure stamped on the intensifying cassette or holder. The correction scale will, therefore, be permitted to cooperate with individual intensifying screens. It should be understood that the pin 100 will be disposed on the arms 98 and 99 for providing said arms with relatively long portions as compared with a relatively short portion 103 and a relatively short arm 102 which is adapted to cooperate with the scale 101. The calipers will thus be seen to be proportionally varied. The relatively long portions of the arms 98 and 99 are applied to the head adjacent the sinus to be X-rayed, in the present instance, and said arms are then held locked in place until the arms 102 and 103 can be applied directly to the scale 19 on the line adjacent the word "sinuses". The heading of this line will be seen to be "thickness of part in inches" and will indicate, in proportion on the scale, the thickness of the part measured. Lines 105 have been drawn from the scale 9 to the upper edge of the meter scale board 8 and said lines are adapted to cooperate with the indicia on the scale 19. It will be understood that the reading on the scale 19, adjacent the indicia concerning the sinuses, as above set forth, may be transferred direct to the scale 9 of the scale board 8 which, in the present instance, will be the scale of the primary volt

meter electrically connected in series across the primary circuit of the X-ray power transformer. The outer end, or the end furthest away from the words "sinuses", "frontal", etc., will cooperate with the lines 105 nearest thereto on the scale 9 and will indicate the maximum primary voltage to be applied to the X-ray transformer for radiographing the frontal sinuses. Arrows 106 will be placed on the scale 20, and these arrows will be adapted to cooperate with the scale 10, through lines 107 of the filament current meter or ammeter. Between the scales 19 and 20, indicia concerning the film distance and the type of tube employed, will be placed. The arrow 106 will be placed on the line of the indicia concerning the type of tube employed at a predetermined location so that said arrows will indicate on the scale 20 the minimum filament current to be applied to the tube under operation. The time of exposure and the current, in milliamperes, is also set forth in indicia between the scales 20 and 21, and arrows for certain different tubes are applied to the scale 21 to cooperate with lines 108 for indicating on the scale 11 the current in milliamperes to be applied to the anode of the X-ray tube. At this point it should be understood that certain tubes for X-raying certain parts of the body will require a certain anode current while other tubes will require a lesser or greater anode current for measuring other parts of the body. For example, the tube 45, which is to be used for radiographing the sinuses, in this example, is first placed in the circuit by changing the switch 54 so that the contacts 55 will be engaged and the high tension fed to the anode and filament return through the conductors 68 and 67 respectively, it being understood that suitable filament supply is provided for the X-ray tubes themselves. Simultaneously, the low tension circuit is completed through the switch 58 for closing the circuit to one of the lamps 32 which is disposed behind the sight opening 31' which is located adjacent the indicia indicating the type of tube to be used for the sinus X-ray work. The lamp 32 will be illuminated and, at the same time, the contact 33 will be short circuited by the contact elements 74 and 77 for completing a circuit to the coil 75 of the relay 76 so that the coil 85 will be energized for completing the circuit to the primary of the X-ray transformer so that a radiograph using the tube 45 may be taken. Attention is particularly directed to the fact that no radiograph may be taken with the tube 45 until the contact 33 short circuits the contact elements 74 and 77, the primary voltage having been controlled to conform to the maximum reading allowed on the scale 19. The filament current, indicated by the scale 10, and the anode current, in milliamperes, for the tube 45, is known previously, as described, and is indicated by the arrows on the scales 20 and 21 and meter scales 10 and 11.

Should it be desired to X-ray the gall bladder, for example, the measurements of the part to be X-rayed or radiographed are taken by the calipers and are transferred thereby to the scale 19. The shift tabs are moved for shifting the scale upwardly until the indicia concerning the gall bladder is adjacent the upper edge of the meter scale board 8. The maximum primary voltage may be read directly from this scale onto the primary volt meter scale 9. The maximum primary voltage for the X-ray power transformer may be ascertained. A different type of tube, such for example as the tube 46, is employed for X-raying the gall bladder. The filament current and the anode current for the tube is predetermined and indicated by arrows on the scales 20 and 21 on the same line with the indicia concerning the gall bladder and the tube used. The second indicating lamp 32, there being three indicating lamps shown, is connected in the circuit by the shifting of the switch blade 56 to engage the contacts 57 and the similar shifting of the switch 62 to engage the contacts 89. High tension current will thus be fed to the tube 46 and, at the same time, the low tension current will be fed from the conductor 69 through the switch 58 and contacts 61, through the conductor 90 to the switch 63 and through the conductor 94 to the contact element 92. This element and the element 93 will be bridged by the contact 33 disposed on the line having the indicia concerning the bladder when the indicating scale board is shifted to the position for X-raying the gall bladder. The low tension circuit will be completed to the relay coil 75 and back through the conductor 70. The relays 76 and 86 will be closed for supplying high tension current to the tube 46. It will be impossible to connect the wrong tube in the circuit for a given radiograph operation as said tube will not be permitted to be energized until the contact 33 disposed on the board 20 is adapted to bridge the elements for controlling the primary current to the X-ray transformer. Also, the proper indicating lamp 32 will be illuminated only when the proper tube is in the circuit.

As illustrated in Figure 5 of the drawings, the indicating scale board may be omitted and the drum 38 substituted therefor. Attention is further directed to the fact that, by the use of the indicating scale board, which is adapted to cooperate with the scales of the meter scale board, direct readings may be taken so that reference to various charts and lengthy computations will not be necessary.

It is believed that it will be understood that I have provided a simple and highly efficient X-ray system which will avoid the danger of tube blowouts and other accidents to X-ray equipment and which will render much easier the operation of an X-ray machine by an X-ray operator.

Having thus described the invention, what I claim is:

1. In an X-ray system, a plurality of X-ray tubes, a high tension switch, a low tension switch mechanically connected with said high tension switch and adapted to operate simultaneously therewith, said high tension switch having pairs of contacts, means connecting one pair of said contacts with one of the X-ray tubes, means connecting another pair of said contacts with another of said X-ray tubes, a casing, meters carried by the casing, a movable scale board carried by the casing and having indicia relating to X-ray operations and the X-ray tube, said scale board having sight openings adjacent the indicia relating to said tubes, indicating lamps carried in the casing, contacts carried by the scale board, a source of low tension current, said source of low tension current being electrically connected with said low tension switch, said movable scale board being shiftable for disposing scales thereon adjacent the meter scales to designate the filament current and high tension voltage to be applied to a given tube, said movable scale board being shiftable for completing the circuit through certain of said contacts and low tension switch whereby the tube indicated by the indicia adjacent said contacts will be energized and the

signal lamp energized for indicating the energization of said tube prior to application of high tension current to said tube.

2. In an X-ray system, a plurality of X-ray tubes, said tubes being of different character and adapted for effecting different X-ray operations, switches, circuit connections for said switches and X-ray tubes for permitting the selective connection of the X-ray tubes in a circuit, said connections including high and low tension circuits for anode and cathode energization of said tubes, a meter casing having a primary voltmeter, a filament ammeter, and a milliammeter therein, scales for said meters, a movable scale board shiftably mounted in the casing and having scales provided with certain indicia relating to X-ray operations and the proportionate thickness of the parts to be X-rayed thereon, said movable scale board having a scale provided with indicia relating to tubes to be used for each of the X-ray operations indicated, contacts carried by the movable scale board, each of said contacts being located adjacent the scale relating to the thickness of the parts to be X-rayed and the scale relating to the tube, and circuit connections for said contacts, said movable scale board being adapted to be shifted in the casing for locating the scale relating to the desired X-ray operation in proximity to the meter scales so that a direct reading of the amount of current and voltage to be impressed on the X-ray tube for a given operation may be present in accordance with the indicia, movement of said scale board simultaneously closing the contact adjacent the scale having the indicia for the desired operation so that the circuit of the desired X-ray tube will be closed, said movable scale board having a scale for designating milliammeter scale readings for a given operation.

3. An X-ray system as claimed in claim 2, wherein the movable scale board is provided with sight openings, one of said sight openings being disposed in line with each scale and contact, a signal lamp in the casing for disposition behind each of said sight openings, and circuit connections for connecting said signal lamps separately in the low tension circuit, said signal lamps being adapted to indicate the proper connection of a given X-ray tube in the circuit with the contacts.

4. In an X-ray system, an X-ray tube, means for indicating the proper setting of the filament current and high tension voltage applied to the tube prior to energization thereof including a volt meter, a filament ammeter, a milliammeter, a movable scale associated with the meters, and indicia on the scale relating to parts of the body and X-ray requirements for X-raying said parts, said movable scale being adapted to shift adjacent the meter scales so that indicia on the movable scale will be associated with that on the meter scales and will therefore cooperate with said meter scales for insuring indication of proper volt meter and ammeter values directly from data on said movable scale.

5. In an X-ray system, an X-ray tube, means for indicating the proper setting of the filament current and high tension voltage for a given X-ray operation prior to energization of the tube, including a volt meter, a filament ammeter, a milliammeter, all of said meters having scales, and a movable scale board slidable adjacent the meter scales and having indicia thereon relating to a part of the body and X-ray requirements for X-raying said part, said movable scale board being shiftable vertically adjacent the meter scales so that the indicia on the scale board will substantially aline with that on the meter scales and will therefore cooperate with said meter scales so that the proper voltage and current settings for said given X-ray operation may be found directly from data on the movable scale board.

6. In an X-ray system, an X-ray tube, means for indicating the proper filament current and high tension voltage applied to the tube for a given X-ray operation prior to energization of the tube, including a casing, a volt meter, a filament ammeter, a milliammeter, all of the meters having scales and being arranged within the casing, a movable scale board slidable within the casing adjacent the scales, indicia on the scale board relating to various parts of the body and X-ray tube requirements for X-raying said parts, said movable scale board being shiftable to set position in relation to the scales for disposing indicia relating to a given operation adjacent certain of said scales whereby said movable scale board indicia will substantially aline with and therefore cooperate with indicia on the meter scales so that indication of proper values on the volt meter and ammeter scales directly from the data on the movable scale board may be had so that said values may be properly adjusted to correspond to the indications on the scales.

7. In an X-ray system, an X-ray tube, means for indicating proper filament current and high tension voltage applied to the tube, comprising a casing, indicators in the casing, said indicators having scales, circuit indications for the indicators and X-ray tube, and a movable scale board in the casing adjacent the scales, said movable scale board having indicia thereon relating to a part of the body to be X-rayed and X-ray requirements for X-raying said part, said indicia being adapted substantially to aline with indicator scale indications so that proper indicator settings will be indicated for a given operation.

JOHN F. TIMMONS.