US00D384745S

United States Patent [19]

Lattin et al.

[11] Patent Number: Des. 384,745

[45] Date of Patent: **Oct. 7, 1997

[54] **ELECTROTRANSPORT DRUG DELIVERY SYSTEM**

[75] Inventors: **Gary A. Lattin**, Forest Lake; **Tighe M. Belden**, Minneapolis, both of Minn.; **Andrew J. Withell**, Palmerston North, New Zealand

[73] Assignee: **Alza Corporation**, Palo Alto, Calif.

[**] Term: **14 Years**

[21] Appl. No.: **49,650**

[22] Filed: **Jan. 23, 1996**

Related U.S. Application Data

[63] Continuation-in-part of Ser. No. 36,703, Mar. 24, 1995, abandoned.

[51] **LOC (6) Cl.** **24-04**

[52] **U.S. Cl.** **D24/189**

[58] **Field of Search** D24/189; 602/41–59; 604/20, 307, 304, 306

[56] **References Cited**

U.S. PATENT DOCUMENTS

D. 278,363	4/1985	Schenkel et al.	D24/189
D. 296,006	5/1988	Asche	D24/189
D. 349,960	8/1994	Gyory et al.	D24/189
D. 352,357	11/1994	Ashley	D24/189
D. 357,743	4/1995	Bilitz et al.	D24/189
D. 362,912	10/1995	Albert	D24/189
2,125,008	7/1938	Scholl	D24/189 X
4,809,707	3/1989	Kraft	604/20 X
4,911,688	3/1990	Jones	604/20
4,942,883	7/1990	Newman	128/798
5,006,108	4/1991	LaPrade	604/20
5,088,978	2/1992	Hillman et al.	604/20
5,445,609	8/1995	Lattin et al.	604/20

FOREIGN PATENT DOCUMENTS

0318776	6/1989	European Pat. Off.	604/20
085023	8/1921	Germany	128/888
0873334	7/1961	United Kingdom	128/893

Primary Examiner—Lucy Lieberman

Attorney, Agent, or Firm—D. Byron Miller; Felissa H. Cagan; Steven F. Stone

[57] **CLAIM**

The ornamental design for an elecrotransport drug delivery system, as shown and described.

DESCRIPTION

FIG. **1** is a top perspective view of an electrotransport drug delivery system, showing one embodiment of our new design;

FIG. **2** is a top plan view thereof;

FIG. **3** is a bottom plan view thereof;

FIG. **4** is an end elevational view thereof; and

FIG. **5** is a side elevational view thereof, the opposite side elevation is a mirror image thereto;

FIG. **6** is a top perspective view of an electrotransport drug delivery system, showing a second embodiment of our new design;

FIG. **7** is a top plan view thereof;

FIG. **8** is a bottom plan view thereof;

FIG. **9** is an end elevational view thereof; and,

FIG. **10** is a side elevaton of FIG. **6**, the opposite side elevation is a mirror image thereto.

1 Claim, 2 Drawing Sheets

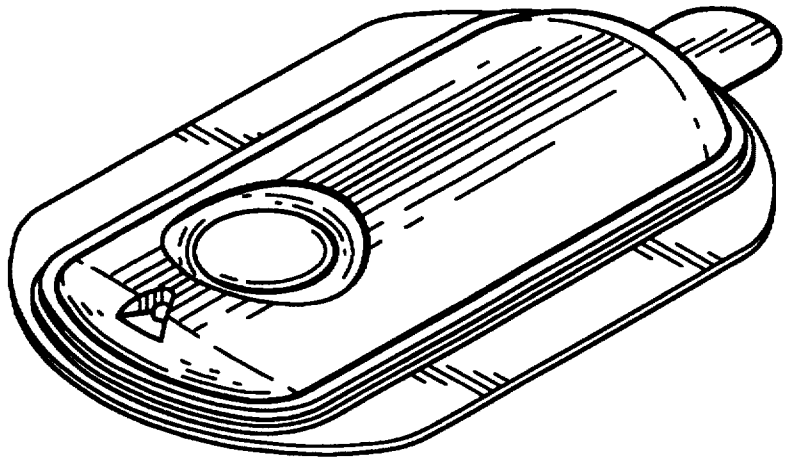

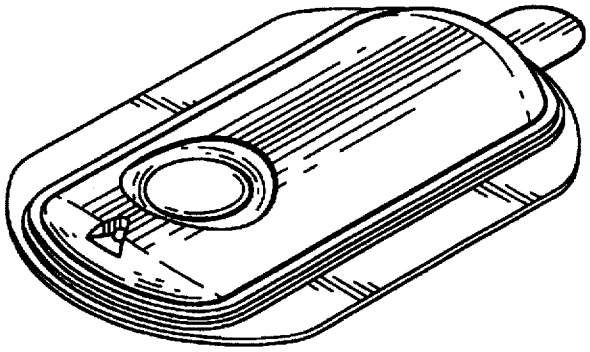

FIG. 1

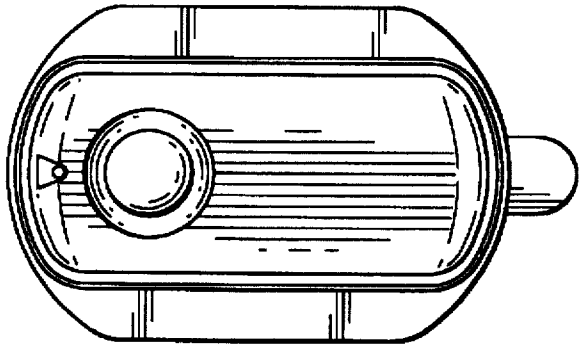

FIG. 2

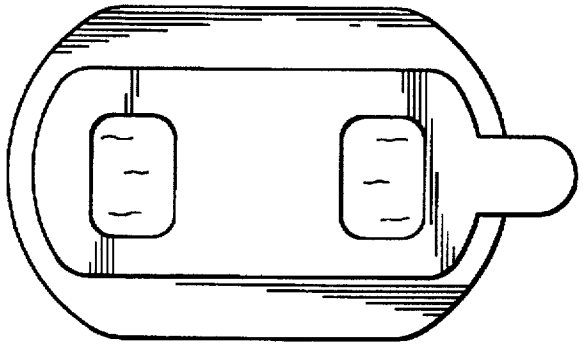

FIG. 3



FIG. 4

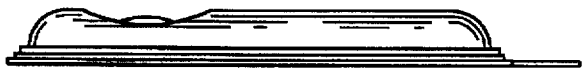

FIG. 5

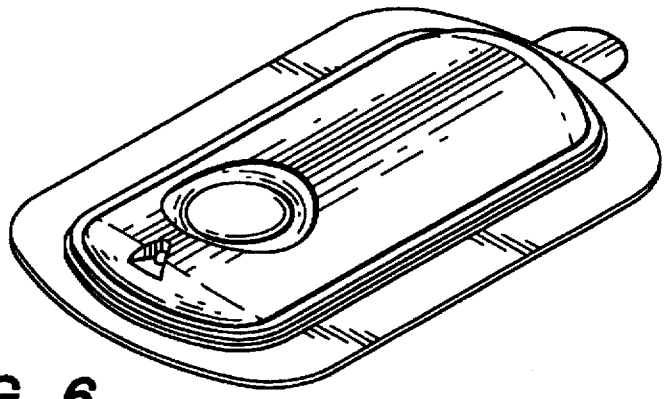

FIG. 6

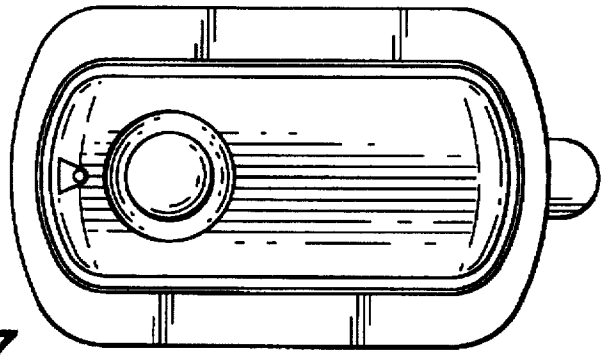

FIG. 7

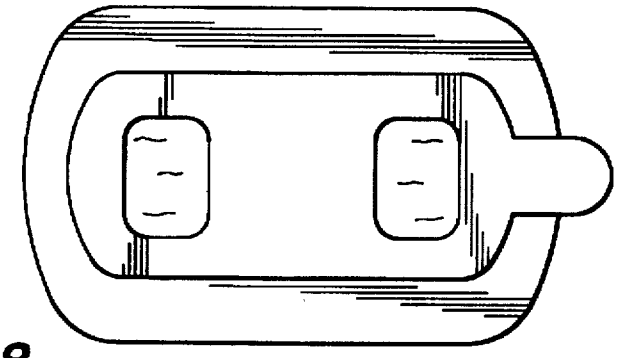

FIG. 8



FIG. 9



FIG. 10