July 25, 1944. J. H. SMITH 2,354,619

VALVE FOR FLOOR WAXERS

Filed June 21, 1941

Fig. 1.

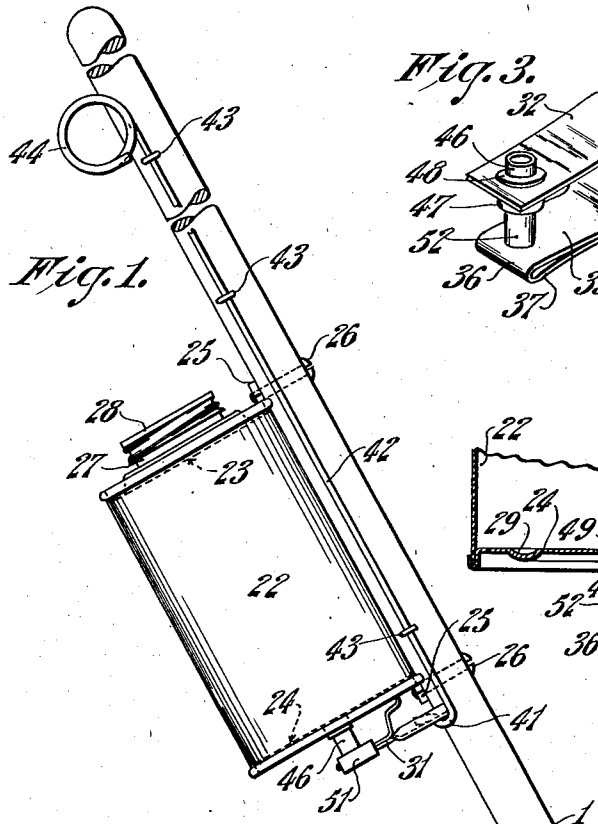

Fig. 3.

Fig. 2.

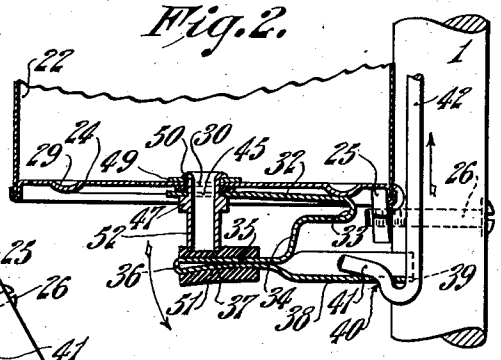

Fig. 4.

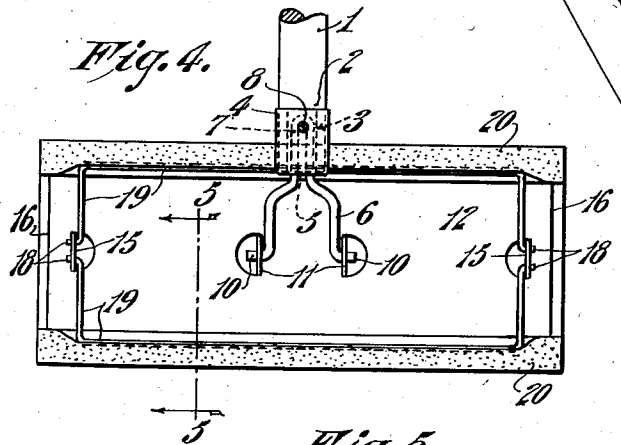

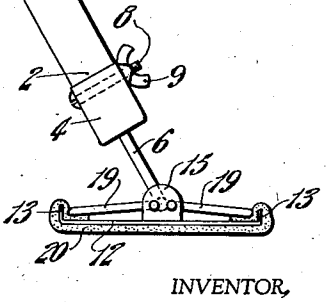

Fig. 5.

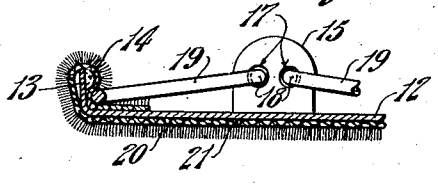

INVENTOR,
Jesse H. Smith,
BY
Blake A. Leaver,
ATTORNEY.

Patented July 25, 1944 2,354,619

UNITED STATES PATENT OFFICE

2,354,619

VALVE FOR FLOOR WAXERS

Jesse H. Smith, Springfield, Mass.

Application June 21, 1941, Serial No. 399,166

2 Claims. (Cl. 251—125)

This invention relates to improvements in floor waxers and oilers.

An object of this invention is to provide a floor waxer, including a reservoir and dispensing means for the polishing medium used, which is extremely simple and economical of manufacture, easy to manipulate, adaptable for use under low furniture, and light in weight.

Another object of this invention is to provide, in a floor finishing device of the character described, a non-absorbent polishing pad which is washable, which will polish a floor without streaking, and which is removably secured on the device without the use of bolts, screws, or the like.

Still another object of this invention is to provide, in a floor waxing or oiling device, a reservoir supported on the device, a combined outlet and valve for dispensing the polishing medium from the reservoir, and simple means for operating the valve to release the polishing medium from the reservoir.

These, and other objects and advantages of this invention will be described and disclosed in detail in the following specification, the accompanying drawing, and the appended claims.

Broadly, this invention comprises, in combination, a handle, a floor plate pivotally supported at one end of the handle, a non-absorbent floor pad secured on the floor plate, means for clamping the pad on the plate, a reservoir secured on the handle and provided with a capped filling port at the top and an outlet pipe at the bottom, a spring member secured on the bottom of the reservoir and connected to the outlet pipe, means on the spring member for closing the outlet pipe, and a rod supported on and guided on the handle and connected to the spring member for deflecting the spring member to move the closing means away from the outlet pipe.

A preferred embodiment of this invention is illustrated in the accompanying drawing, in which

Fig. 1 is a side elevational view of the floor polishing device,

Fig. 2 is a sectional view taken at the bottom of the reservoir,

Fig. 3 is a perspective view of the outlet pipe and valve spring,

Fig. 4 is a plan view of the floor plate and polishing pad, and

Fig. 5 is a cross sectional view, at enlarged scale, taken on the line 5—5 of Fig. 4.

Referring now to the drawing in detail, in which like numerals refer to like parts throughout,

A handle 1 is provided with a slot or recess 3 at one end 2, and the end 2 is covered and reinforced with a ferrule 4 which is also provided in its end with an opening 5. A Y-shaped member 6, preferably of round wire, and shaped with a shank portion 7, is secured on the end 2 of the handle 1 by positioning the shank portion 7 in the recess 3, and when thus positioned, a bolt 8 and nut 9 securely bind the end 2 of the handle 1, the ferrule 4, and the member 6 together. The free ends of the member 6 are bent outwardly at 10, and the ends 10 are normally pivotally engaged in ears 11 which project upwardly in parallel relation from a floor plate 12. A pinching action on the member 6 will release the ends 10 from the ears 11, thereby disconnecting the floor plate 12 from the handle 1. This construction permits the handle 1 to be lowered into a position approximately parallel to the plane of the plate 12, so that the plate 12 and its polishing pad may be pushed under furniture or other objects having a low clearance above the floor.

The floor plate 12 is formed with side flanges 13, each of which flanges 13 is provided with one or more detents 14 projecting inwardly therefrom. The floor plate 12 is also formed with ears 15 projecting upwardly therefrom, similar to the ears 11, and located adjacent the ends 16 of the plate 12. The ears 15 are pierced at 17 to pivotally receive ends 18 of toggle bars 19. A floor pad 20, formed of sheared plush with a rubberized backing fabric 21, is removably secured on the floor plate 12 by cooperation of the toggle bars 19 and detents 14, as best shown in Fig. 5. The pad 20 is easily and quickly removed, for cleaning or washing, and as easily replaced, by manipulation of the toggle bars 19.

The use of a sheared plush pad with a rubberized backing fabric for a floor waxing or polishing device results in a substantial saving in waxing or polishing material, particularly in liquid form, relative to devices now known to be available. The pad is non-absorbent, and experiments have shown that an average size floor may be completely waxed, using this pad, with an amount of wax which would be absorbed by the pads now known to be in use. The sheared plush, with its multitude of fibers on end, as presented to the floor surface, provided a high polish with a minimum of rubbing, and without streaking. The fibers of the plush act like the bristles of a brush to distribute the polishing medium, such as liquid wax, evenly and uniformly

over the surface to which the polishing medium is applied.

A reservoir 22, preferably, but not necessarily, cylindrical, with recessed top and bottom walls 23 and 24, respectively, is secured on the handle 1 by means of nuts 25 and bolts 26, as shown in Figs. 1 and 2. The top wall 23 is provided with a threaded extension or spout 27 on which a threaded closure cap 28 is removably secured. The spout 27 is of large diameter, relative to the top of the reservoir 22, to provide for ease in filling the reservoir. The bottom wall 24 is formed with a raised, circular bead 29 and a central opening 30. The discharge pipe and closure spring for the reservoir 22 are made in a unit to simplify assembly, as best shown in Fig. 3. A stiff spring member 31, preferably made from strip steel, is formed with an upper, horizontal leg 32, a hinge loop 33 at one end of the leg 32, a substantially vertical arm 34 continuing from the loop 33, and a lower, substantially horizontal leg 35, the leg 35 being bent at 36 and returned upon itself at 37, the portion 37 being extended beyond the arm 34 to provide a lever portion 38. The lever extension 38 is channel-shaped, and is provided with a notch 39 and opening 40 for receiving a hooked end 41 of an operating rod 42. The rod 42 is slidably supported and guided on the handle 1 by eyelets or screw-eyes 43, and is formed at its upper end with a finger loop or coil 44.

The upper leg 32 of the spring 31 is provided, adjacent the end opposite the hinge loop 33, with an opening 45, in which is secured by means of a press or force fit a tube or pipe 46. The tube 46 is formed with a shoulder 47 which engages the underside of the leg 32.

In assembling the pipe and spring on the reservoir 22, a resilient washer 48 is placed over the end of the pipe 46, as shown in Fig. 3; this end is then inserted in the opening 30 in the bottom wall 24 of the reservoir 22; a metallic washer 49 is placed over the pipe 46 on the inside of the wall 24, and the end 50 of the pipe 46 is headed or riveted over on the washer 49, as shown in Fig. 2. Thus the discharge pipe and spring are rigidly and permanently secured on the reservoir 22, with the shoulder 47 and washers 48 and 49 cooperating to provide a leak-proof joint. This construction results in an important feature of the invention. The inside bottom of the reservoir 22 is substantially flush. Thus, the contents of the reservoir may be completely exhausted, through the pipe 46, before refilling. There is no opportunity for an accumulation of residue in the bottom of the reservoir, and the reservoir may be quickly and easily cleaned, thus maintaining a sanitary condition. A resilient sleeve 51, of rubber or other suitable material, is forced over the ends of the portions 35 and 37 of the spring 31, and acts as a stopper for the discharge end of the pipe 46.

To release the polishing medium, such as liquid wax, or the like, from the reservoir 22, the rod 42 is pulled upwardly, this action causing the lever portion 38 of the spring 31 to pivot on the end of the vertical portion 34 as a fulcrum and pulling the portions 35 and 37 and the sleeve 51 away from the discharge end 52 of the pipe 46 to permit the polishing medium to flow therefrom. Release of the rod 42 permits the spring 31 to return to its normal position closing the pipe 46. The hinge loop 33 of the spring 31 rests against the reinforcing bead 29, as shown in Fig. 2, thereby providing a firm base for the action of the spring 31 and rod 42. The flow of liquid from the pipe 46 is adequately controlled to suit conditions by manipulation of the fill cap 28, which controls the flow of air entering the reservoir 22. As the cap is unscrewed, the flow of air will increase, thereby permitting an increased flow of polishing medium from the pipe 46.

What I claim is:

1. A valve for dispensing devices comprising a discharge spout, a spring closure member for said spout formed with a leg perpendicular to the axis of said spout and secured on said spout, a hinge loop at the end of said leg remote from said spout, a second leg substantially parallel to and spaced from said first named leg and overlapping the end of said spout, a portion connecting said hinge loop and said second leg, said second leg being bent upon itself with the bent portion extending beyond said connecting portion and said hinge loop, a resilient pad on said second leg and engaging the discharge end of said spout, and means for manipulating said extended portion to deflect said second leg away from the discharge end of said spout.

2. A valve for dispensing devices comprising a substantially U-shaped spring member having two substantially parallel leg members and a section connecting said leg members, a discharge pipe secured in one of said leg members with an end of said pipe normally engaging the other of said leg members, said other leg member being provided with a lever portion extending beyond said connecting section in a direction opposite to said leg members, whereby movement of said lever portion toward said first named leg member will deflect said other leg member away from the end of said pipe.

JESSE H. SMITH.