(12) INTERNATIONAL APPLICATION PUBLISHED UNDER THE PATENT COOPERATION TREATY (PCT)

(19) World Intellectual Property Organization
International Bureau

(43) International Publication Date
20 September 2012 (20.09.2012)

WIPO | PCT

(10) International Publication Number
WO 2012/125798 A1

(51) International Patent Classification:
F02N 7/08 (2006.01) *B60K 6/12* (2006.01)

(21) International Application Number:
PCT/US2012/029185

(22) International Filing Date:
15 March 2012 (15.03.2012)

(25) Filing Language: English

(26) Publication Language: English

(30) Priority Data:
61/453,313 16 March 2011 (16.03.2011) US

(71) Applicant *(for all designated States except US)*: **PARKER HANNIFIN CORPORATION** [US/US]; 6035 Parkland Blvd., Cleveland, Ohio 44124-4141 (US).

(72) Inventors; and

(75) Inventors/Applicants *(for US only)*: **LOWMAN, Roger** [US/US]; 343 Parkside Dr., Simpsonville, SC 29681 (US). **STEGEMANN, Patrick** [DE/US]; 1 N. Chestnut Avenue, Arlington Heights, Illinois 60005 (US).

(74) Agent: **CLARK, Robert**; 6035 Parkland Blvd., Cleveland, Ohio 44124-4141 (US).

(81) Designated States *(unless otherwise indicated, for every kind of national protection available)*: AE, AG, AL, AM, AO, AT, AU, AZ, BA, BB, BG, BH, BR, BW, BY, BZ, CA, CH, CL, CN, CO, CR, CU, CZ, DE, DK, DM, DO, DZ, EC, EE, EG, ES, FI, GB, GD, GE, GH, GM, GT, HN, HR, HU, ID, IL, IN, IS, JP, KE, KG, KM, KN, KP, KR, KZ, LA, LC, LK, LR, LS, LT, LU, LY, MA, MD, ME, MG, MK, MN, MW, MX, MY, MZ, NA, NG, NI, NO, NZ, OM, PE, PG, PH, PL, PT, QA, RO, RS, RU, RW, SC, SD, SE, SG, SK, SL, SM, ST, SV, SY, TH, TJ, TM, TN, TR, TT, TZ, UA, UG, US, UZ, VC, VN, ZA, ZM, ZW.

(84) Designated States *(unless otherwise indicated, for every kind of regional protection available)*: ARIPO (BW, GH, GM, KE, LR, LS, MW, MZ, NA, RW, SD, SL, SZ, TZ, UG, ZM, ZW), Eurasian (AM, AZ, BY, KG, KZ, MD, RU, TJ, TM), European (AL, AT, BE, BG, CH, CY, CZ, DE, DK, EE, ES, FI, FR, GB, GR, HR, HU, IE, IS, IT, LT, LU, LV, MC, MK, MT, NL, NO, PL, PT, RO, RS, SE, SI, SK, SM, TR), OAPI (BF, BJ, CF, CG, CI, CM, GA, GN, GQ, GW, ML, MR, NE, SN, TD, TG).

[Continued on next page]

(54) Title: START CONTROL SYSTEM USING SINGLE HYDRAULIC PUMP

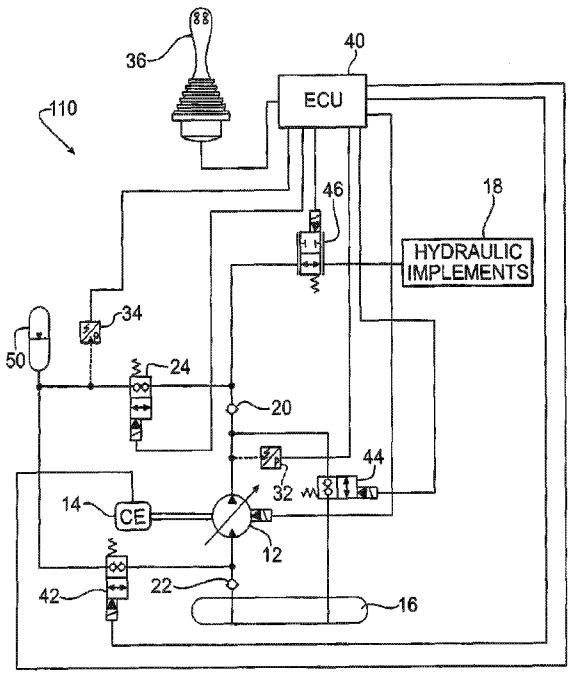

FIG. 1

(57) Abstract: A start-stop control system and method is provided utilizing a primary pump to both supply pressurized fluid to hydraulic consumers of the system and to charge one or more accumulators. When the accumulator is charged, the system will stop the fuel to the combustion engine when the operator controls of the hydraulic consumers have not been utilized for a period of time or in response to an engine off command. When the operator controls of the hydraulic consumers are again utilized, the accumulator will activate the hydraulic motor to start the combustion engine as well as providing pressurized hydraulic fluid to the hydraulic consumers.

WO 2012/125798 A1

Published:

— *with international search report (Art. 21(3))*

— *before the expiration of the time limit for amending the claims and to be republished in the event of receipt of amendments (Rule 48.2(h))*

START CONTROL SYSTEM USING SINGLE HYDRAULIC PUMP

CROSS-REFERENCE TO RELATED CASES

[0001] This application claims the benefit of U.S. Provisional Application Serial No. 61/453,313; filed March 16, 2011, the disclosure of which is expressly incorporated herein by reference.

TECHNICAL FIELD

[0002] The present invention relates to start control systems for combustion engine driven hydraulic systems, and more particularly to a start-stop control system utilizing an accumulator to start the combustion engine and stopping the combustion engine when the accumulator is recharged and the hydraulic implements have not been used for a predetermined time.

BACKGROUND

[0003] Prior art combustion engine driven hydraulic systems generally use an additional starter motor to restart the combustion engine.

SUMMARY

[0004] At least one embodiment of the invention provides a start/stop control system comprising: a combustion engine; a hydraulic pump selectively driven

by the combustion engine and selectively driving a crankshaft of the combustion engine to start the combustion engine; a hydraulic fluid reservoir supplying fluid to the hydraulic pump; a hydraulic accumulator accumulating hydraulic pressure delivered from the hydraulic pump when the pump is driven by the combustion engine and supplying hydraulic pressure to rotate the pump when the combustion engine has been turned off; at least one hydraulic consumer selectively utilizing hydraulic pressure provided at least by the hydraulic pump; an operator input device connected to an electronic control unit; the electronic control unit selectively stopping and starting the flow of fuel to the combustion engine; the electronic control unit selectively connecting the accumulator to the hydraulic pump in fluidic communication when the combustion engine is off and the operator input device is actuated, the hydraulic pump starting the combustion engine.

[0005] At least one embodiment of the invention provides a method of operating a start/stop control system comprising the steps of: running a combustion engine to drive a hydraulic pump; pumping hydraulic fluid from a hydraulic reservoir to at least one hydraulic implement and/or charging a hydraulic accumulator; stopping the flow of fuel to the combustion engine when the accumulators are charged and either the at least one hydraulic implement is not being used for a predetermined time or a stop engine command is given by the operator input device; supplying pressurized hydraulic fluid from the accumulator to the hydraulic pump when an operator input device is actuated;

rotating a crankshaft of the combustion engine utilizing the hydraulic pump; starting the flow of fuel to the combustion engine such that the rotation of the crankshaft starts the combustion engine.

BRIEF DESCRIPTION OF THE DRAWINGS

[0006] Embodiments of this invention will now be described in further detail with reference to the accompanying drawings, in which:

[0007] FIG. 1 is a schematic of an embodiment of a hydraulic circuit of the present invention;

[0008] FIG. 2 is a schematic of a second embodiment of a hydraulic circuit of the present invention utilizing two hydraulic accumulators;

[0009] FIG. 3 is a schematic of another embodiment of a hydraulic circuit of the present invention utilizing an overcenter hydraulic pump and utilizing two hydraulic accumulators; and

[0010] FIG. 4 is a schematic of another embodiment of a hydraulic circuit of the present invention utilizing an overcenter hydraulic pump utilizing a single hydraulic accumulator.

DETAILED DESCRIPTION OF THE DRAWINGS

[0011] Referring to FIG. 1, an embodiment of a start control system 10 in accordance with the present invention. A typical hydraulic system is comprised of a hydraulic pump with variable or fixed displacement 12 driven and mechanically linked to an internal combustion engine 14 to provide flow from a hydraulic reservoir 16 to hydraulic implements or consumers 18. The invention adds components to this typical system to allow the internal combustion engine 14 to be shut off during times when no hydraulic consumer 18 is activated while still being able to instantaneously resume flow to the consumers 18.

[0012] The start/stop cycle begins with the combustion engine 14 running and driving the hydraulic pump 12. The pump 12 is providing flow from a reservoir or sump 16, which may or may not be pressurized, through two check valves 20 and 22 to the hydraulic implements 18. When an electronic control unit (ECU) 40 determines that engine load and/or required pump flow is low, solenoid 24 is energized to switch to an open position. In a system with a variable displacement pump 12 the pumps displacement would then be commanded to provide additional flow for charging an accumulator 30. This is not necessary in a fixed pump system. Instead in a fixed pump system a proportional solenoid 24 may be fully or partially engaged to increase the pressure upstream thus charging the accumulator 30. The charge procedure will be monitored by a pressure sensor 32. Once the charge pressure has

reached a satisfactory pressure, the charging process is terminated by de-energizing solenoids 24, 42.

[0013] An additional pressure sensor 34 may be arranged at the accumulator inlet to allow pressure monitoring as accumulator pressure may decay over time under certain temperature conditions.

[0014] When the ECU 40 determines that no hydraulic consumer has been activated by operator command through input devices 36 for a given amount of time or gets an appropriate external command (such as an operator engine kill switch) from the input devices 36, and the accumulator has a satisfactory charging level, the combustion engine 14 will be shut off by stopping the flow of fuel to the engine 14.

[0015] As soon as the ECU 40 determines that hydraulic flow to the implements 18 needs to be resumed due to operator command through the input devices 36, the solenoids 42 and 44 are energized. The pressurized hydraulic fluid stored in accumulator 50 will discharge to the inlet side of the pump 12 as the check valve 22 prevents flow back to the reservoir 16. The flow will then allow the pump 12 to become a motor and driving the crankshaft of the combustion engine 14. The discharged fluid from the pump 12 will then recirculate to the hydraulic reservoir 16. Simultaneously, the solenoid 24 is energized to provide instantaneous flow from the hydraulic accumulator 50 to

the hydraulic implements or consumers 18. A check valve 20 prevents the flow from taking a path to the pump 16 outlet side. As the ECU 40 monitors engine startup, the ECU 40 may decide based on the previous accumulator charge pressure to reduce implement flow either through the solenoid 46 or in case of electrical controlled implements 18 by reducing function speed. This is to ensure the pump 12 is generating enough torque to tum the engine over.

[0016] As soon as the crankshaft speed of the combustion engine 14 is at or near its idle speed the flow of fuel to the combustion engine resumes. At this point the solenoids 42, 44 and 24 are de-energized. The cycle is thus ready to begin again.

[0017] Referring now to FIG. 2, an embodiment of a start/stop control system 110 is shown. The embodiment of FIG. 2 differs from FIG. 1 in that it includes a second accumulator 52 and a second pressure sensor 38 associated with the second accumulator 52. The second accumulator 52 of system 110 provides a separate source of hydraulic pressure exclusively for the hydraulic consumers 18. This provides an instantaneous response that is not reduced by the flow demand required to start the combustion engine 14 as in the previous embodiment.

[0018] A typical operating cycle of the start/stop systems begins with the combustion engine 14 running the pump 12 which pumps fluid flow from the

reservoir 16, which may or may not be pressurized through two check valves 20 and 22 to the hydraulic implements 18. The solenoids 24 and 26 are energized to switch to an open position. According to the system condition determined by the ECU 40, the proportional solenoid 46 then may be fully or partially engaged to increase the pressure upstream charging the accumulators 50 and 52. The pressure sensors 34 and 38 are used to monitor the charging state and determine when the charging process is finished. When satisfactory pressure levels have been reached the charging process is terminated by de-energizing all solenoids.

[0019] When the ECU 40 determines that no hydraulic consumer has been activated by operator command through input devices 36 for a given amount of time or gets an appropriate external command and the accumulators have a satisfactory charging level the combustion engine 14 will be shut off by stopping the flow of fuel to the engine.

[0020] As soon as the ECU 40 determines that hydraulic flow to the implements 18 needs to be resumed due to operator command through the input devices 36, the solenoids 42 and 44 are energized. The pressurized hydraulic fluid stored in accumulator 50 will discharge to the inlet side of the pump 12 as the check valve 22 prevents flow back to the reservoir 16. The flow will then allow the pump 12 to become a motor and driving the crankshaft of the combustion engine 14. The discharged fluid from the pump 12 will then

recirculate to the hydraulic reservoir 16. Simultaneously, the solenoid 26 is energized to provide instantaneous flow from the second hydraulic accumulator 52 to the hydraulic implements or consumers 18. A check valve 20 prevents the flow from taking a path to the pump 12 outlet side.

[0021] As soon as the crankshaft speed of the combustion engine 14 is at or near its idle speed the flow of fuel to the combustion engine resumes. At this point the solenoid 44 is de-energized. As the pressure at the pump outlet increases and reaches the desired system pressure as monitored by the pressure sensor 32, the solenoid 42 is disengaged. The check valve 20 opens to provide flow to the consumers 18. The cycle is thus ready to begin again.

[0022] Figure 3 shows the general system layout of another embodiment of the start/stop system 210. While the operating principle is similar it utilizes an overcenter pump 12'. Such a pump can maintain its direction of motion while the flow is being reversed. As the pump side downstream towards the hydraulic implements 18 will always see high pressure both under normal operating conditions and in startup mode the check valve 22 in FIG. 2 is being replaced by a solenoid valve 28 in FIG. 3 to be engaged during startup. Also this embodiment utilizes an unpressurized reservoir 16' unlike the pressurized reservoirs 16 in the previous embodiments.

[0023] FIG. 4 shows an embodiment of the start/stop control system 310 that is similar to the system 210 of FIG. 3, but utilizing a single accumulator 50. The operating principal is similar to the previous system 10 that also utilizes a single accumulator. System 310 utilizes an overcenter pump 12' that can maintain its direction of motion while the flow is being reversed. Therefore the high pressure side of the pump 12' does not have to change when switching between pump and motor modes. Only one solenoid 24 is necessary to discharge the accumulator 50 to the pump outlet. In this case the pump will again act as a motor and discharge directly to the reservoir 16'. That is why there will be no need for a pressurized reservoir 16 in this alternative configuration.

[0024] Prior art circuits use an additional starter motor to restart the combustion engine. This invention eliminates the need for such an additional motor as it uses the primary system pump for the task. In addition to that the invention allows for a seamless transition from accumulator assisted operation of the implements to pump driven operation through a check valve and pressure monitoring.

[0025] It is further noted that any accumulator in the embodiments could be replaced by multiple accumulators. The accumulator(s) may also be used for other functions as long as they retain sufficient charge to start the combustion engine. It is also possible that the accumulator may be replaced by some other

source of pressurized fluid such as by a hydraulic implement, i.e. such as a boom that is held in an elevated position having potential energy. When the combustion engine is tumed off and needs to be started, the hydraulic implement is lowered and the pressurized fluid is released to rotate the pump and start the combustion engine.

[0026] Although the principles, embodiments and operation of the present invention have been described in detail herein, this is not to be construed as being limited to the particular illustrative forms disclosed. They will thus become apparent to those skilled in the art that various modifications of the embodiments herein can be made without departing from the spirit or scope of the invention.

CLAIMS

1. A start/stop control system comprising:

a combustion engine;

a hydraulic pump selectively driven by the combustion engine and selectively driving a crankshaft of the combustion engine to start the combustion engine;

a hydraulic fluid reservoir supplying fluid to the hydraulic pump;

a hydraulic accumulator accumulating hydraulic pressure delivered from the hydraulic pump when the pump is driven by the combustion engine and supplying hydraulic pressure to rotate the pump when the combustion engine has been turned off;

at least one hydraulic consumer selectively utilizing hydraulic pressure provided at least by the hydraulic pump;

an operator input device connected to an electronic control unit;

the electronic control unit selectively stopping and starting the flow of fuel to the combustion engine;

the electronic control unit selectively connecting the accumulator to the hydraulic pump in fluid communication when the combustion engine is off and the operator input device is actuated, the hydraulic pump starting the combustion engine.

2. The start/stop control system of claim 1 further comprising a pressure sensor communicable with the electronic control unit, the pressure sensor monitoring a charging state of the accumulator.

3. The start/stop control system as in any one of claims 1-2, further comprising a plurality of control valves selectively allowing fluid flow from the hydraulic pump to the accumulator, from the accumulator to the hydraulic pump, from the hydraulic pump to the first hydraulic accumulator, from the hydraulic pump to the at least one hydraulic implement, and from the hydraulic pump to the reservoir, as directed by the electronic control unit.

4. The start/stop control system as in any one of claims 1-3, further comprising a pressure sensor communicable with the electronic control unit, the pressure sensor monitoring the pressure at an outlet of the pump.

5. The start/stop control system as in any one of claims 1-4, further comprising at least one check valve preventing flow directly from the accumulator to the reservoir.

6. The start/stop control system as in any one of claims 1-5, further comprising at least one check valve preventing flow directly from the accumulator to the outlet of the pump.

7. The start/stop control system of claim 1 wherein the hydraulic cylinder is a first hydraulic cylinder and a second hydraulic cylinder, the first and second hydraulic accumulators accumulating hydraulic pressure delivered from the hydraulic pump when the pump is driven by the combustion engine, the first accumulator supplying hydraulic pressure to rotate the pump and the second accumulator supplying hydraulic pressure to the hydraulic consumer, each when the combustion engine has been turned off and the operator input device is actuated.

8. The start/stop control system of claim 7 further comprising a first and second pressure sensor communicable with the electronic control unit, the first pressure sensor monitoring a charging state of the first accumulator and the second pressure monitoring a charging state of the second accumulator.

9. The start/stop control system as in any one of claims 7-8, further comprising a plurality of control valves selectively allowing fluid flow from the hydraulic pump to the first accumulator, from the accumulator to the hydraulic pump, from the hydraulic pump to the second accumulator, from at least one of the hydraulic pump and the second accumulator to the at least one hydraulic implement, and from the hydraulic pump to the reservoir, as directed by the electronic control unit.

10. The start/stop control system of claim 8 further comprising a third pressure sensor communicable with the electronic control unit, the third pressure sensor adapted to monitor the pressure at an outlet of the pump.

11. The start/stop control system as in any one of claims 7-10, further comprising at least one check valve preventing flow directly from the first accumulator to the reservoir.

12. The start/stop control system as in any one of claims 7-11, further comprising at least one check valve preventing flow directly from the second accumulator to the outlet of the pump.

13. The start/stop control system of claim 1, wherein the hydraulic pump is an over-center hydraulic pump.

14. The start/stop control system of claim 13,

wherein the hydraulic cylinder is a first hydraulic cylinder and a second hydraulic cylinder, the first and second hydraulic accumulators accumulating hydraulic pressure delivered from the hydraulic pump when the pump is driven by the combustion engine, the first accumulator supplying hydraulic pressure to rotate the pump and the second accumulator supplying hydraulic pressure to the hydraulic consumer each when the combustion engine has been turned off and the operator input device is actuated;

a first and second pressure sensor communicable with the electronic control unit, the first pressure sensor monitoring a charging state of the first accumulator and the second pressure sensor monitoring a charging state of the second accumulator;

a plurality of control valves selectively allowing fluid flow between the hydraulic pump and the first accumulator, between the hydraulic pump and the second accumulator, between the second accumulator and the hydraulic implement; and between the hydraulic implement and the hydraulic pump, as directed by the electronic control unit.

15. The start/stop control system as in any one of claims 13-14, wherein the hydraulic reservoir is an unpressurized tank.

16. The start/stop control system as in any one of claims 1-12, wherein the hydraulic pump is a variable displacement pump communicable with the electronic control unit.

17. The start/stop control system as in any one of claims 1-12, wherein the hydraulic pump is a fixed displacement hydraulic pump.

18. The start/stop control system as in any one of claims 1-12, wherein the hydraulic reservoir is a pressurized tank.

19. The start/stop control system as in any one of claims 1-18, wherein the system utilizes a single hydraulic pump.

20. A method of operating a start/stop control system comprising the steps of:

running a combustion engine to drive a hydraulic pump;

pumping hydraulic fluid from a hydraulic reservoir to at least one hydraulic implement and/or charging a hydraulic accumulator;

stopping the flow of fuel to the combustion engine when the accumulators are charged and either the at least one hydraulic implement is not being used for a predetermined time or a stop engine command is given by the operator input device;

supplying pressurized hydraulic fluid from the accumulator to at least the hydraulic pump when an operator input device is actuated;

rotating a crankshaft of the combustion engine utilizing the hydraulic pump;

starting the flow of fuel to the combustion engine such that the rotation of the crankshaft starts the combustion engine.

21. The method of claim 20, wherein the step of pumping hydraulic fluid from a hydraulic reservoir to at least one hydraulic implement and/or charging a hydraulic accumulator includes the step of charging a first and a second hydraulic accumulator; and

the step of supplying pressurized hydraulic fluid from the accumulator to at least the hydraulic pump when an operator input device is actuated includes the step of supplying pressurized hydraulic fluid from the first accumulator to the hydraulic pump and from the second accumulator to the at least one hydraulic implement, when an operator input device is actuated.

22. The method of claim 20 further comprising the step of shutting off the flow of hydraulic fluid from the accumulator to the hydraulic pump when the pressure of the hydraulic fluid leaving the pump reaches a predetermined pressure.

23. The method of claim 20 further comprising the step of stopping the charging of the accumulator when the accumulator is charged to a predetermined level.

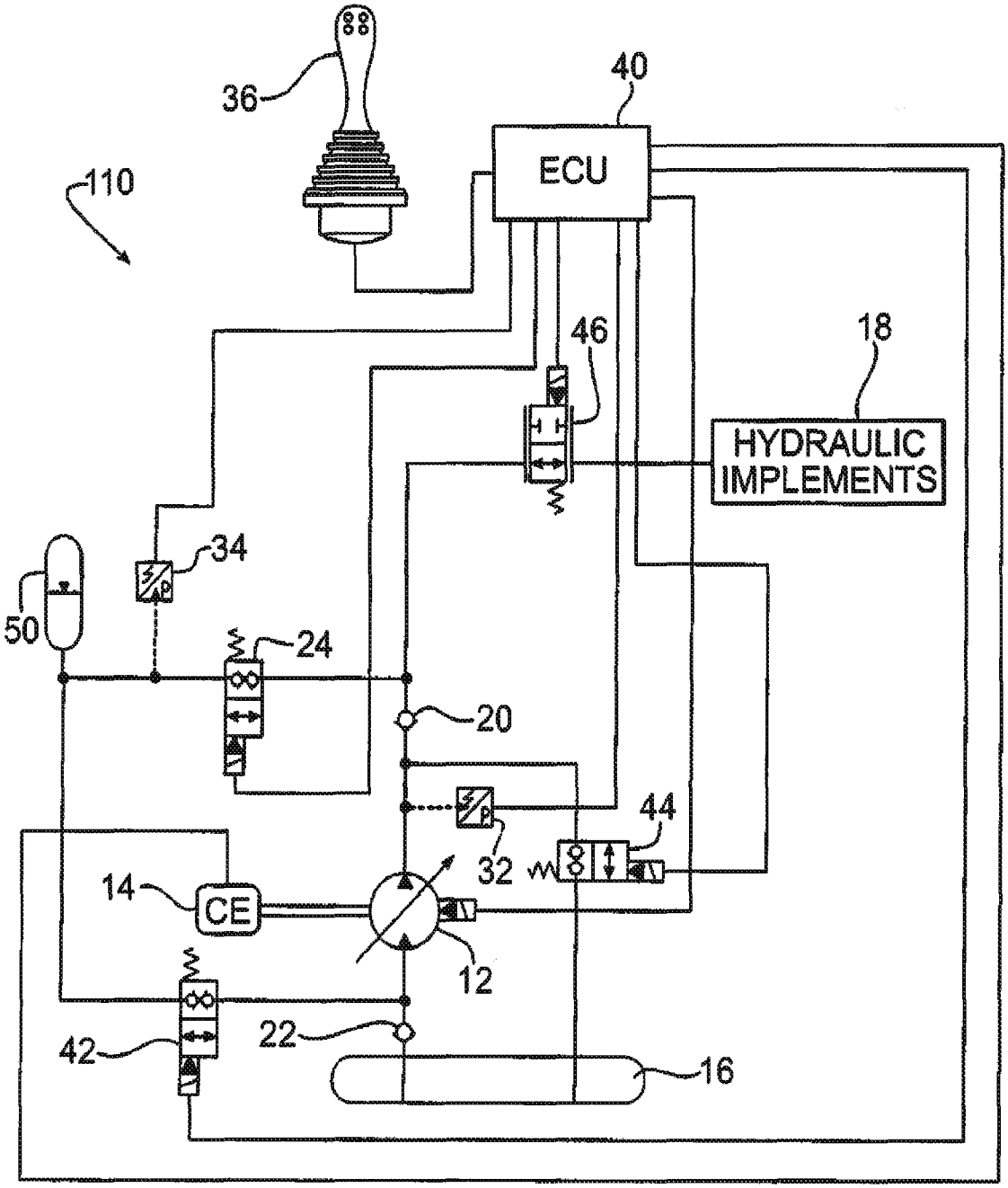
36
40
ECU
110
46
18
HYDRAULIC IMPLEMENTS
34
50
24
20
44
32
14
CE
12
42
22
16

FIG. 1

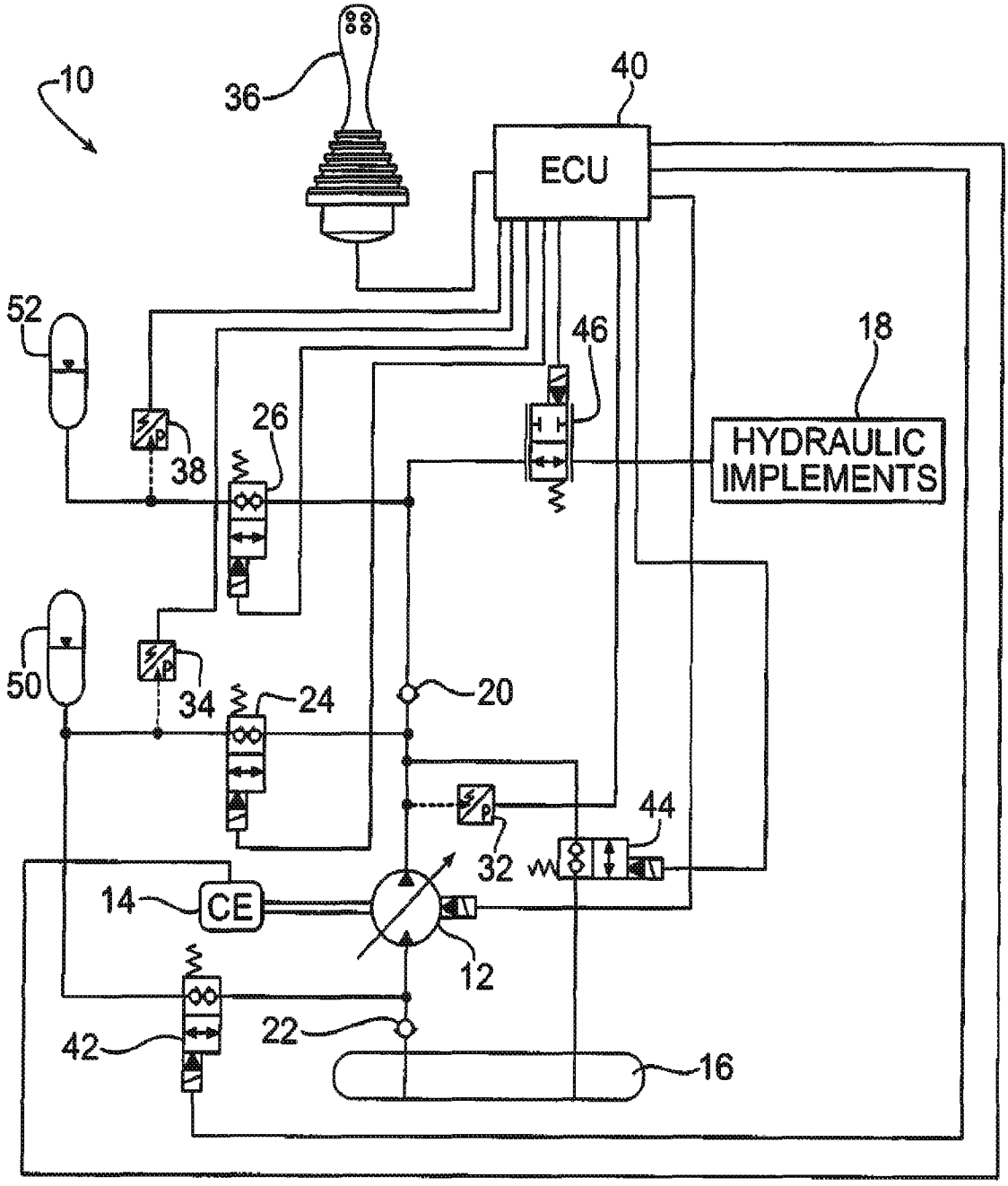
10
36
40
ECU
52
46
18
HYDRAULIC IMPLEMENTS
26
38
50
34
24
20
44
32
14
CE
12
42
22
16

FIG. 2

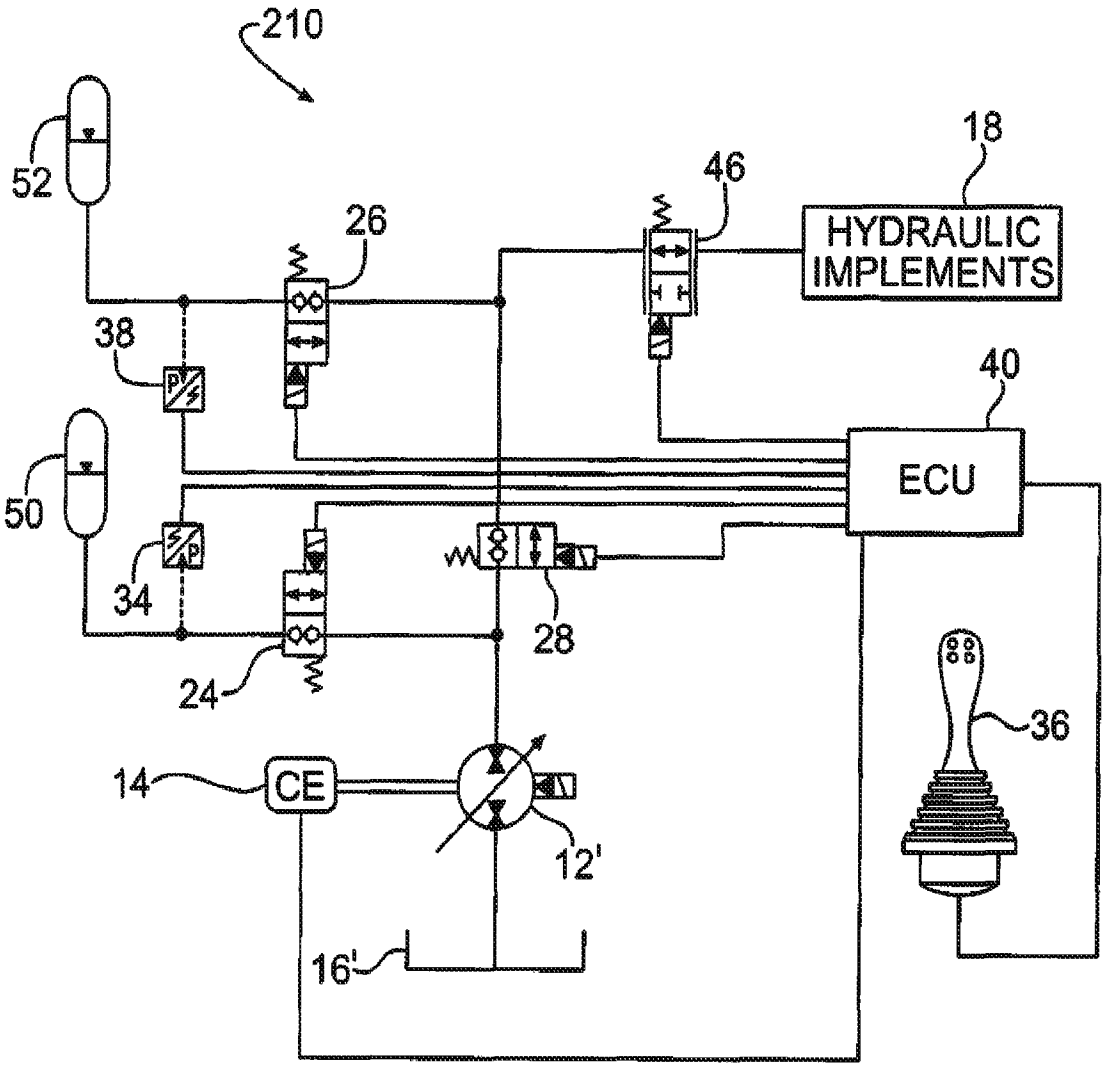
210
52
26
46
18
HYDRAULIC IMPLEMENTS
38
40
ECU
50
34
28
24
36
14
CE
12'
16'

FIG. 3

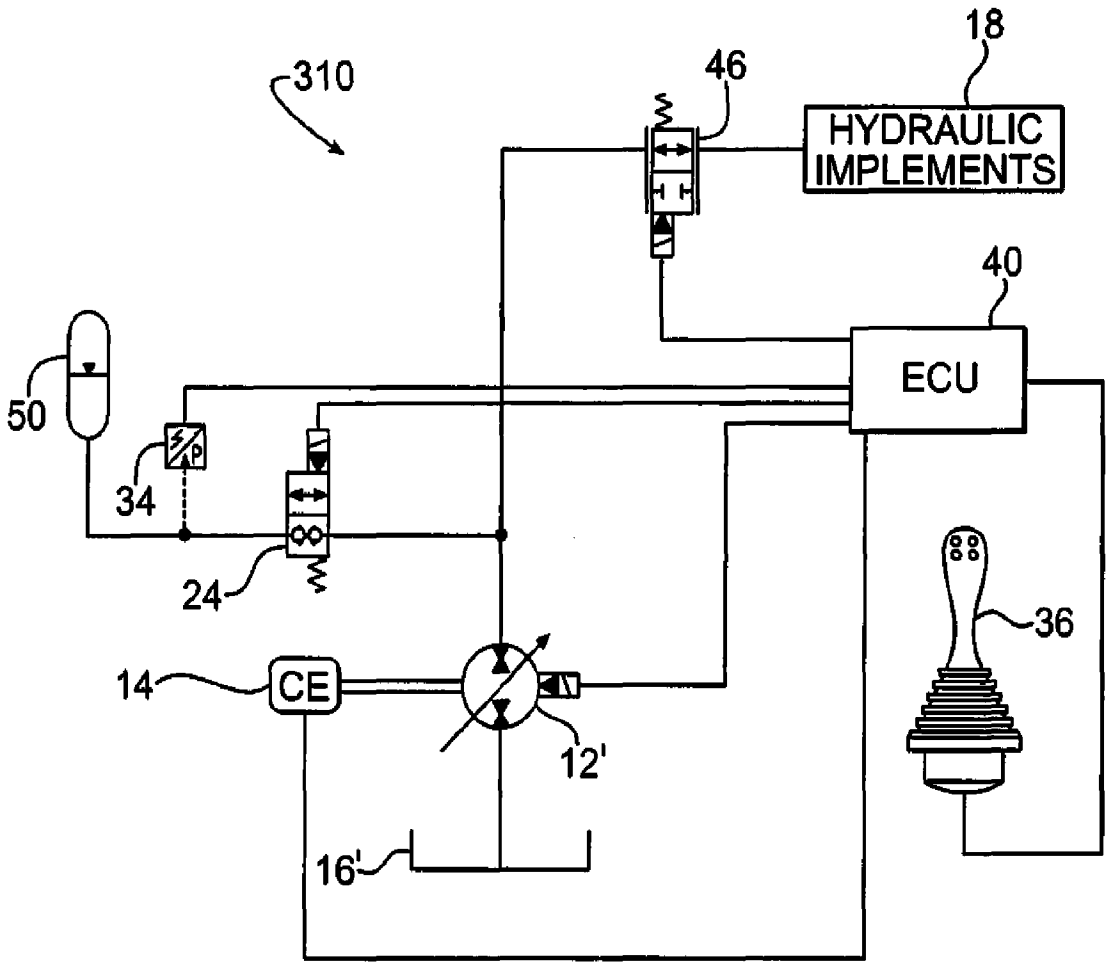

FIG. 4

INTERNATIONAL SEARCH REPORT

International application No
PCT/US2012/029185

A. CLASSIFICATION OF SUBJECT MATTER
INV. F02N7/08 B60K6/12
ADD.

According to International Patent Classification (IPC) or to both national classification and IPC

B. FIELDS SEARCHED

Minimum documentation searched (classification system followed by classification symbols)
F02N B60K

Documentation searched other than minimum documentation to the extent that such documents are included in the fields searched

Electronic data base consulted during the international search (name of data base and, where practicable, search terms used)
EPO-Internal, WPI Data

C. DOCUMENTS CONSIDERED TO BE RELEVANT

Category*	Citation of document, with indication, where appropriate, of the relevant passages	Relevant to claim No.
X	US 4 227 587 A (CARMAN VINCENT E) 14 October 1980 (1980-10-14) column 1, line 66 - column 3, line 39; figures 1-4 -----	1,3,5,6, 17,19, 20,22,23
X	JP 59 023064 A (NISSAN MOTOR) 6 February 1984 (1984-02-06) abstract -----	1-6,13, 16,17, 19,20
X	US 3 234 889 A (COOPER RICHARD L ET AL) 15 February 1966 (1966-02-15) column 4, line 52 - column 5, line 52 -----	1,20

☐ Further documents are listed in the continuation of Box C.

☒ See patent family annex.

* Special categories of cited documents :

"A" document defining the general state of the art which is not considered to be of particular relevance

"E" earlier application or patent but published on or after the international filing date

"L" document which may throw doubts on priority claim(s) or which is cited to establish the publication date of another citation or other special reason (as specified)

"O" document referring to an oral disclosure, use, exhibition or other means

"P" document published prior to the international filing date but later than the priority date claimed

"T" later document published after the international filing date or priority date and not in conflict with the application but cited to understand the principle or theory underlying the invention

"X" document of particular relevance; the claimed invention cannot be considered novel or cannot be considered to involve an inventive step when the document is taken alone

"Y" document of particular relevance; the claimed invention cannot be considered to involve an inventive step when the document is combined with one or more other such documents, such combination being obvious to a person skilled in the art

"&" document member of the same patent family

Date of the actual completion of the international search	Date of mailing of the international search report
25 July 2012	03/08/2012

Name and mailing address of the ISA/	Authorized officer
European Patent Office, P.B. 5818 Patentlaan 2 NL - 2280 HV Rijswijk Tel. (+31-70) 340-2040, Fax: (+31-70) 340-3016	Pileri, Pierluigi

INTERNATIONAL SEARCH REPORT

International application No
PCT/US2012/029185

Patent document cited in search report	Publication date	Patent family member(s)	Publication date
US 4227587 A	14-10-1980	NONE	
JP 59023064 A	06-02-1984	NONE	
US 3234889 A	15-02-1966	NONE	