Dec. 6, 1949 R. F. KNEISLEY 2,490,523

SWITCH

Filed Oct. 3, 1946

FIG-1-

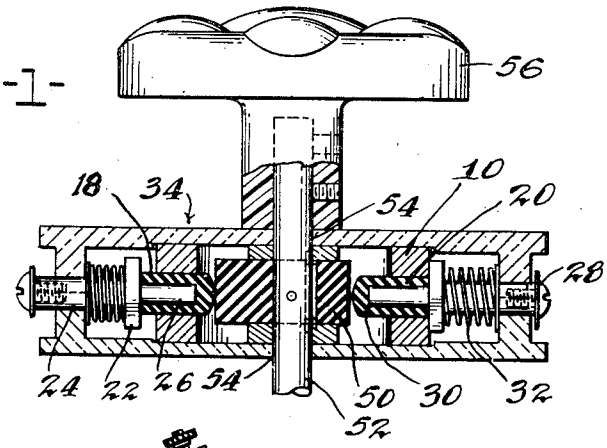

FIG-3-

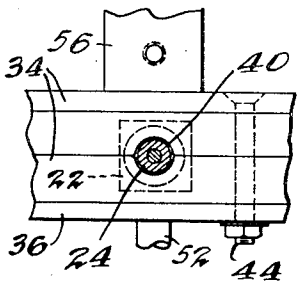

FIG-2-

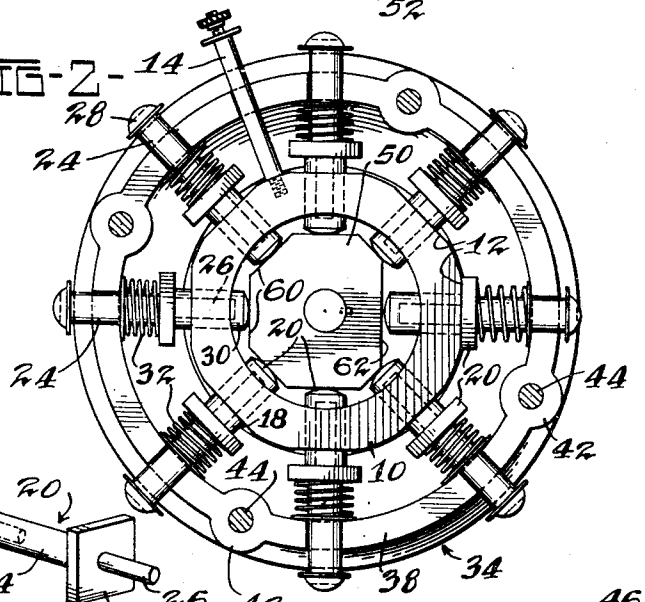

FIG-4-

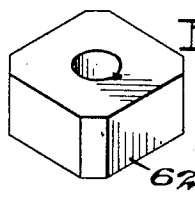

FIG-5-

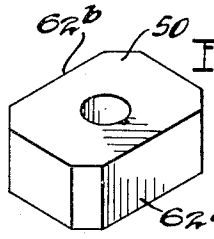

FIG-6-

FIG-8-

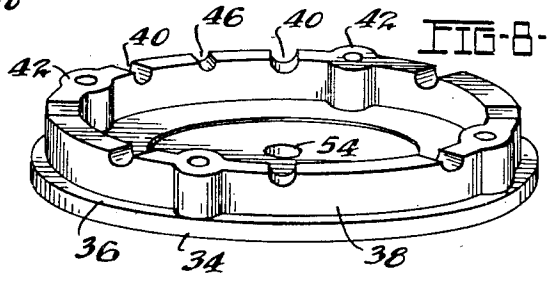

FIG-7-

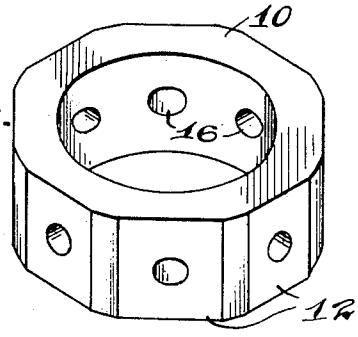

INVENTOR.
Richard F. Kneisley
BY
Owen & Owen
ATTYS.

Patented Dec. 6, 1949

2,490,523

UNITED STATES PATENT OFFICE

2,490,523

SWITCH

Richard F. Kneisley, Toledo, Ohio

Application October 3, 1946, Serial No. 700,347

3 Claims. (Cl. 200—6)

1

This invention relates to a rotary electric switch of the type used to make and break electrical circuits in which the current flow is relatively great.

The primary object of the invention is to provide a switch to control a plurality of electrical circuits that is capable of withstanding long continued and rough usage.

Another object of the invention is to provide a rotary electric switch that may be readily altered to provide a single pole control for a plurality of circuits, a double pole control for more than one circuit, or a parallel control for more than one circuit, as well as one that may be ganged with similar units to operate a great multiplicity of circuits.

Still another object of the invention is to provide a rotary electric switch in which the actuating shaft is always electrically neutral and in which the contacts themselves are housed so that accidental closing of a circuit is effectively prevented.

Other objects and advantages of the invention will become apparent from the following specification, reference being had to the accompanying drawings in which:

Figure 1 is a central vertical sectional view, with parts in full, of a switch embodying the present invention; Fig. 2 is a plan view of the operating parts with a cover plate removed; Fig. 3 is a fragmentary elevational view showing the manner in which the switch housing elements fit around a contactor; Figs. 4 and 5 are perspective views of modified forms of operating cams; Fig. 6 is a perspective view of the metallic portion of a contactor, prior to assembly; Fig. 7 is a perspective view of a suitable common contact; and Fig. 8 is a perspective view of one of the switch housing halves.

Referring to the drawings, the switch embodying the present invention comprises a stationary common contact ring 10 which is made heavy in cross-section so that it will withstand long and hard use. The contact ring 10 preferably is cylindrical in the interior and is formed with a series of spaced flat areas 12 on its exterior against which the movable contacts abut as hereinafter described. Electrical connection to the common contact 10 is established in any suitable manner as by a post 14 extending laterally therefrom.

Each of the flat areas 12 is drilled radially of the contact ring 10 to form guide openings 16 for stems 18 of movable contacts 20. In the present instance eight of the movable contacts 20

2

are shown, spaced equally around the common contact ring 10. The number and disposition of the movable contacts may, of course, vary widely.

Each movable contact 20 comprises a metallic portion, shown in Fig. 6, including a contact face 22 of considerable area, an outer cylindrical guide portion 24 and an inner extension 26 extending from the contact proper. The outer guide portion 24 may be drilled or otherwise arranged for the reception of a suitable connecting member such as a binding screw 28. The contact face 22 is made large since it is required to withstand repeated opening and closing movements while carrying relatively great quantities of current. Being massive it is better able to resist the effects of repeated arcing.

Inner extension 26 of each movable contact forms the core of an insulated guide and cam follower stem 30 which reciprocates in guide openings 16 formed in the common contact ring 10. Each movable contact is biased to circuit closing position by a spring 32 bearing against the outer face of the contact proper.

A housing 34 is provided for the operating elements of the switch, and includes two identical halves of pressed or molded insulating material, one of which is shown in Fig. 8. As there indicated, each housing half is preferably a circular plate 36 with an annular flange 38 extending therefrom near its periphery. The flange 38 is formed with a series of spaced guide grooves 40 for the reception of the outer extensions of the several movable contacts. Enlarged bosses 42 are formed at intervals around the flange 38 and are bored to receive bolts or other fastening elements 44 by which the two housing halves are held together. When mated, the two halves provide complete guide ways for the reciprocating movable contacts, and an opening 46 through which the connecting stem or post 14 protrudes.

An operating cam 50 carried by an operating shaft 52 is disposed within the center of the common contact ring 10 in the path of reciprocation of all of the movable contacts 20. The cam is formed of an insulating material so that, even though shaft 52 is metal, the shaft is electrically neutral. Shaft 52 is journalled in central holes 54 in the housing halves and preferably extends entirely through the housing. Thus one end of the shaft may receive an operating knob or handle 56 while the other end may be coupled to another switch unit for ganged operation.

Cam 50 is formed with a series of indexing flats 60 and with one or more cut away portions 62.

The radial extent of the indexing flats is such that the movable contacts 20 are held out of engagement with the stationary common contact ring 10, while the cut away portion 62 is so dimensioned that the facing movable contact is closed, being urged to the closed position by its biasing spring 32. In the form shown in Fig. 2, the circuits associated with the movable contacts 20 are thus closed successively, one at a time. The switch is thus a single pole, eight position device. If it is desired to close two contacts at a time, making a double pole, four position switch, it is only necessary to change the configuration of the operating cam to the form shown in Fig. 5. As there indicated, the cut away flats 62*a* and 62*b* are each of sufficient depth so that facing movable contacts are permitted to engage the central common contact ring. Similarly, double pole, double throw two position switch may be provided by a cam in which four of the movable contacts close at each indexing movement, as shown in Fig. 4.

In operation, once the switch is assembled and connected to appropriate electrical circuits, it is only necessary for the operator to turn knob 56 to rotate cam 50 to make his selection of the various circuits to be closed. The switch has a snap-action "feel" since the multiplicity of springs acting against the cam 50 tend to center it with respect to the several movable contacts. Thus proper indexing is assured and it is not possible for the switching cam to remain in an intermediate position with all contacts open.

While the invention has been described in connection with a particular form and disposition of the parts, it should be expressly understood that the description is of a preferred embodiment for purposes of illustration. Various modifications and changes will suggest themselves to those skilled in the art, and such modifications and changes may be made without departing from the scope of the appended claims.

What I claim is:

1. In a switch of the class described, an insulating housing having a cylindrical interior in which switch parts are disposed, a plurality of radially movable contacts reciprocable in said housing, a common contact ring in said housing and having a smaller diameter than said housing and associated with all of said movable contacts whereby a circuit is closed through any movable contact and said common contact ring, a rotatable operating cam in the path of reciprocation of all of said movable contacts, surfaces formed on said cam such that said movable contacts can engage the common contact only in selected cam positions, means biasing said movable contacts toward circuit closing position, an operating shaft for said cam passing axially through said housing, and connecting means on the outside of said housing to which circuit connections may be made to said contact ring and to each of said movable contacts.

2. A switch in accordance with claim 1 in which said housing is formed of mated halves and is provided with guide means to determine the path of reciprocation of said movable contacts.

3. A switch in accordance with claim 1 in which each of said movable contacts is carried by a reciprocating stem having an insulated cylindrical inner portion biased against said operating cam, said portions being guided in openings in said common contact ring.

RICHARD F. KNEISLEY.

REFERENCES CITED

The following references are of record in the file of this patent:

UNITED STATES PATENTS

Number	Name	Date
1,498,293	Poirson	June 17, 1924
1,721,420	Sturner	July 16, 1929
2,395,572	Meuer et al.	Feb. 26, 1946