(19) Europäisches Patentamt
European Patent Office
Office européen des brevets

(11) **EP 2 514 485 A1**

(12) **EUROPEAN PATENT APPLICATION**

(43) Date of publication:
24.10.2012 Bulletin 2012/43

(51) Int Cl.:
A62B 23/02 *(2006.01)*

(21) Application number: **11305481.1**

(22) Date of filing: **21.04.2011**

(84) Designated Contracting States:
AL AT BE BG CH CY CZ DE DK EE ES FI FR GB GR HR HU IE IS IT LI LT LU LV MC MK MT NL NO PL PT RO RS SE SI SK SM TR
Designated Extension States:
BA ME

(71) Applicant: **Sperian Protection Armor**
22940 Plaintel (FR)

(72) Inventors:
- **Marchandise, Christelle**
  22170 Bringolo (FR)
- **Milin, Loïc**
  44300 Nantes (FR)
- **Morne, Eric**
  85130 Bazoges en Paillers (FR)
- **Remaud, Blandine**
  49280 Mazières en Mauges (FR)

(74) Representative: **Hirsch, Marc-Roger**
Hirsch & Associés
58, Avenue Marceau
75008 Paris (FR)

(54) Mask body having several levels adapted to open out

(57) The invention proposes a mask body (20) for the protection of the respiratory system of a wearer, comprising: a filtering assembly a support structure for supporting the filtering assembly, the support structure having an opened state and a store state in which the mask body (20) is flat-folded, the support structure having several levels (42, 44, 46) linked by blocking means adapted to open out the support structure along the direction of the breathing of the wearer trough the filtering assembly.

The invention also proposes a mask comprising the above mask body (20).

The invention allows to have mask with a high comfort, a lifetime and a rigidity similar to masks with a cup-molded form while having the size of masks with a flat-folded form in the store state.

Fig.4

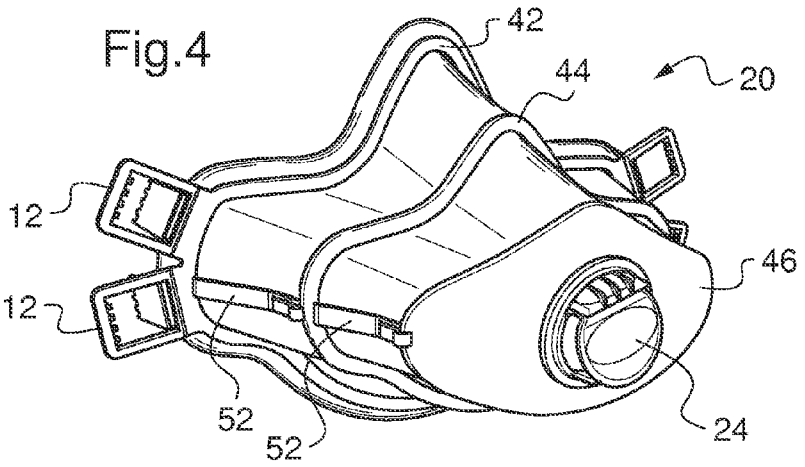

EP 2 514 485 A1

Description

FIELD OF THE INVENTION

[0001] The invention relates to a mask body having several levels adapted to open out. The invention also relates to a mask comprising the above mask body.

BACKGROUND OF THE INVENTION

[0002] Masks are used in a wide variety of applications when it is desired to protect a human's respiratory system from particles suspended in the air or from unpleasant or noxious gases. Generally such face masks are of two types - a molded cup-shaped form or a flat-folded form. These two types of face masks have different levels of comfort.

[0003] Masks with molded cup-shaped form generally ensure a high inner volume for the wearer. A high inner volume ensures a better comfort for the wearer of the mask. On the contrary, masks with a flat folded form provide a lower comfort, notably because the inner volume provided by such masks is too small and because masks with a flat folded form are often difficult to set up on the face of the wearer.

[0004] The document WO2009/038934 describes a mask having a mask body with a support structure that supports a filtration assembly. This mask is close to the molded cup-shaped form, however the support structure comprises horizontal hinges to accommodate the motion of the wearer's jaw. Despite the provision of hinges, this mask is cumbersome relative to the type of masks with a flat-folded form. More generally each mask with molded cup-shaped form are cumbersome relative to the type of masks with a flat-folded form.

SUMMARY OF THE INVENTION

[0005] The invention aims to offer a less cumbersome mask.

[0006] This object is achieved with a mask body for the protection of the respiratory system of a wearer, comprising:

- a filtering assembly
- a support structure for supporting the filtering assembly, the support structure having an opened state and a store state in which the mask body is flat-folded, the support structure having several levels linked by blocking means adapted to open out the support structure along the direction of the breathing of the wearer trough the filtering assembly.

[0007] Preferred embodiments are defined in the dependent claims. The invention further proposes that :

- the support structure has two blocking means between each contiguous levels, each two blocking means being opposite one to another;
- the blocking means comprise hinges;
- the blocking means are resilient members;
- the support structure comprises at least a hoop for each level;
- the filtering assembly is removable from the support structure.

[0008] Another object of the invention is a mask comprising the above mask body. The mask may have an adjustable headband system.

[0009] Further features and advantages of the invention will appear from the following description of embodiments of the invention, given as non-limiting examples, with reference to the accompanying drawings listed hereunder.

BRIEF DESCRIPTION OF THE DRAWINGS

[0010]

Fig. 1 shows a perspective view from the bottom of an embodiment of a mask in a near store state;
Fig. 2 shows a perspective view from the top of the mask of figure 1 in an opened state;
Fig. 3 shows a perspective side view of the mask of figure 1 in a full opened state;
Fig. 4 shows a perspective three-quarter view of another embodiment of a mask in a full opened state;
Fig. 5 shows a back view of the mask of figure 1 in an opened state;
Fig. 6 shows a perspective front view of the mask of figure 4 set up in an opened state on a wearer face;
Fig. 7A and 7B show a lateral scaled view of the support structure of the mask body in the store state and in the opened state;
Fig. 8A, 8B, 8C, 8D, 8E and 8F show sketches of different embodiments of the support structure of masks;
Fig. 9A, 9B, 10A, 10B, 11A, 11B, 12A, 12B, 13A and 13B show perspective view of variants of the support structure for the embodiment of figure 8B, in the store state and in the opened state.

DETAILED DESCRIPTION OF THE INVENTION

[0011] The invention proposes a mask body. The mask body may be part of a mask provided to ensure the protection of the respiratory system of a wearer of the mask. Consequently, the invention also proposes a mask comprising the mask body. The wearer of the mask is preferably human so that the mask is intended to be worn on a human face.

[0012] The mask body comprises a filtering assembly. The filtering assembly may realize the protection of the respiratory system of the wearer from particles suspended in the air or from unpleasant or noxious gases. The filtering assembly may be an assembly of different layers

among which at least one is a filtering layer. The layers of the filtering assembly may be made of non woven material such as melt blown non woven material or spun bond non woven material. The filtering layer is for example made of melt blown non-woven material.

[0013] The mask body also comprises a support structure. The support structure is made of a more rigid material than the material of the filtering assembly. The support structure could then support the filtering assembly. In other words, the support structure serves as a rigid skeleton of the mask body. As a consequence, the support structure ensures a higher rigidity and a longer service life than above-mentionned masks with a flat-folded form which are only formed of non woven material.

[0014] The support structure have an opened state. The opened state of the support structure corresponds to an opened state of the mask body. The opened state of the mask body is provided as a state of use for the wearer of the mask. The opened state of the structure ensures a high comfort for the wearer similarly to above described masks with molded cup-shaped form.

[0015] The support structure further have a store state in which the mask body is flat-folded. The flat-folded store state of the support structure ensures that the mask comprising the proposed mask body is less cumbersome than masks with molded cup-shaped form. Besides, the flat folding of the support structure is less cumbersome than the mask of document WO2009/038934 whose support structure can not be flat-folded.

[0016] The support structure has several levels. The several levels are linked by blocking means. These blocking means are adapted to block the support structure in the opened state and also preferably in the store state. Despite the blocking function of the blocking means, the blocking means are adapted to let a human opening the support structure by simple manipulation. In other words, the blocking means do not impede that the several levels may be move relative one to another to provide the conversion of the mask body from the store state to the opened state.

[0017] This opening of the mask structure is made along the direction of the breathing of the wearer trough the filtering assembly. The direction of the breathing corresponds to the direction along which the wearer wearing the mask breaths in and out. Then, considering the setting up position of the mask on the face of the wearer, the direction of the breathing is the direction going from the wearer's mouth towards the exterior. In other words, considering the setting up position of the mask on the wearer, the structure of the mask body then opens out from the level of the support structure being the closest of the wearer's face towards the direction opposite to the wearer. In the following description, the level of the support structure being the closest of the wearer in the opened state is called the base level. The conversion of the structure body from the store state to the opened state corresponds to the removal of the levels away from the base level and from the face of the wearer. Despite the fact that the direction of the opening of the support structure may be defined with respect to the setting up potision of the mask on the wearer, the mask body is preferably open out before the setting up of the mask on the wearer.

[0018] Such an opening out of the support structure of the mask body allows that in the store state, several levels of the support structure may be in the vicinity of the base level ensuring that the store state of the support structure may be flat-folded. Further the opening out of the mask body ensures the provision of a high inner volume and the base level may be shaped to fit with the face of the wearer.

[0019] Consequently the proposed mask body allows to have mask with a high comfort, a lifetime and a rigidity similar to masks with a cup-molded form while having the size of masks with a flat-folded form in the store state. Figure 1 shows a perspective view from the bottom of an embodiment of a mask 10 close to the store state. This mask 10 is formed of the mask body 20 and have adjustable headband system formed by headbands 18 and adjusting rings 12 for the headbands 18. Figure 2 shows a perspective view from top of the mask 10 in an opened state.

[0020] Figures 1 and 2 show the several levels 42, 44 and 46 of the support structure 40 of the mask 10. As illustrated for each level, the support structure 40 comprises a hoop, preferably an annular hoop.

[0021] The state of the mask shown in figure 2 corresponds to an opened state, however, the mask 10 may be more opened as illustrated in figure 3. Figures 3 and 4 show perspective views of the mask 10 and of the mask body 20 in a full opened state of the mask. According to figure 3, in such a full opened state, the distance L1 between the levels 42 and 44 and the distance L2 between the levels 44 and 46 may each be of at least 30 mm.

[0022] In reference to figures 2, 3 and 4, the filtering assembly 22 extends between each of the levels 42, 44 and 46. Accordingly, when the mask 10 is opened towards the exterior, i.e. away from the base level 42, the filtering assembly 22 unfolds between each of the levels 42, 44 and 46. This unfolding of the filtering assembly 22 allows to have a large chamber inside the mask and to move away the filtering assembly 22 from the mouth of the wearer, which contributes to the comfort of the wearer. Figure 5 shows a back view of the mask 10 in an opened state, illustrating the higher inner volume obtained by the mask.

[0023] According to another aspect, figure 5 shows that the base level 42 may comprise a seal 48 provided to ensure a good airtightness between the wearer 80 and the mask 10, when the mask is in the set up position on the wearer 80. This further contributes to the comfort of the wearer of the mask.

[0024] The setting up position of the mask corresponds to the position of the mask shown in figure 6. The wearer 80, wears the mask 10 over its mouth and nose, the setting up being facilitated by the adjustable headband sys-

tem whose headbands 18 surround the head of the wearer. The words "side", "front", "bottom", "top", "back" and "three-quarter" used to qualify the different view of the mask 10 in this description are all relative to the orientation of the mask 10 in the set up position as shown in figure 6. The direction of breathing of the wearer here corresponds to a direction perpendicular to the front plane.

[0025] According to an aspect of the embodiment shown in figures 1 to 3, the filtering assembly 22 may extend inside the annular hoop of the level 46. Alternatively according of the embodiment shown in figures 4 and 6, the hoop of the level 46 may be a solid hoop. This solid hoop facilitates the disposition on the mask body of a valve 24. The valve 24 being disposed at the level 46 is the farthest from the wearer's mouth in the set up position, in order to provide a better comfort. The valve 24 may be disposed in the middle of the level 46 so that it intersects the direction of breathing when the mask is being worn. However without the use of a solid hoop for the level 46, the valve may be disposed directly on the filtering assembly extending inside the annular hoop of the level 46.

[0026] Figures 7A and 7B show the support structure 40 of the proposed mask body respectively in the store state and in the opened state. The support structure 40 here includes only the adjustable rings 12 of the adjustable headband system.

[0027] As illustrated, each level may substantially lie in a plane. In this document, the feature of substantially lying in a plane for a level means that the height of each level represents less than 10% of the greatest length of the level. Conformingly, in reference to figure 3, the greatest length of the level 46 may be greater than 90 mm whereas the height of the level may be less than 9 mm. The planes in which each level substantially lies are preferably perpendicular to the direction of the breathing of the wearer of the mask.

[0028] In the store state shown in figure 7A, the levels 42, 44 and 46 are flat-folded, i.e. for every set of two contiguous levels, the hoops of these levels substantially lie on a common plane. In this document the feature of substantially lying in a common plane for two contiguous levels means that the distance between the two contiguous levels represents less than 10% of the greatest length among the two levels. Conformingly in the store state, the distance between the level 44 and the level 46 may be less than 6mm, whereas the greatest length among the levels 44 and 46 may be greater than 100mm. Further, the distance between the level 42 and the level 44 may be less than 8mm, whereas the greatest length among the levels 42 and 44 may be greater than 160mm.

[0029] To provide a store state more flat, it is advantageous that, in the store state, the respective hoop of two contiguous levels may be concentric. Back to figure 1, the hoop of the levels 44 and 46 are concentric. However the figure 1 only showing a mask in a near store state, the hoop of the base level 42 is not concentric to the hoops of the other levels 44 and 46.

[0030] In a general way, the flat-folded store state may be considered as a state where for every set of two contiguous levels, the hoops of these levels substantially lie on a common plane or are contiguous one to another.

[0031] According to one aspect of the invention, the mask 10 may be a mask used intermittently i.e. the mask may be not be continuously worn. Between the use of the mask by the wearer 80, the mask body 20 may be converted from the opened state to the store state. This converting of the mask body 20 back to the store state allows the wearer 80 to store the mask in a less cumbersome state than the opened state. The mask 10 may then be efficiently stored until a further use of the mask for which the wearer 80 will convert again the support structure 40 from the store sate to the opened state. Further, the support structure 40 may also be reusable. Indeed, after the use of the filtering assembly 22 during all its life time (which could be only 8 hours), the filtering assembly 22 may be removed between the various level of the support structure so as to be replaced by a new filtering assembly.

[0032] Figures 7A and 7B are scaled and correspond to a preferred embodiment of the support structure 40. Distance E corresponds to the distance between the upper face of the level 42 and the upper face of the level 44, either in the store state (Ec) or in the opened state (Ee). Distance D corresponds to the distance between the upper face of the level 44 and the upper face of the level 46, either in the store state (Dc) or in the opened state (De). Distance C corresponds to the distance between the lower face of the level 42 and the upper face of the level 46, either in the store state (Cc) or in the opened state (Ce). Distance B corresponds to the distance between the lower face of the level 42 and the upper side of the valve 24, either in the store state (Bc) or in the opened state (Be). Distance A corresponds to the distance between the lower part of the adjusting rings 12 and the upper side of the valve 24, either in the store state (Ac) or in the opened state (Ae). According to the preferred embodiment of figure 3, in the store state, distance Dc may be around 13,1mm, distance Ec may be around 7,8 mm, distance Cc may be around 26,9 mm, distance Bc may be around 39,7 mm and distance Ac may be around 50,07 mm. According to figure 4, for the same embodiment in the opened state, distance De may be around 35,6mm, distance Ee may be around 39,4 mm, distance Ce may be around 80,94 mm, distance Be may be around 93,8 mm and distance Ae may be around 104,14 mm. In this document, the term "around XXX mm" used to described a distance disclose the use of the distance more or less 10% and the use of the distance more or less 0,5mm.

[0033] Back to figure 4, the blocking means adapted to open out the support structure 40 may comprise hinges 52. Alternatively, figures 8A, 8C, 8D, 8E and 8F show sketches of the support structure 40 of the mask for various embodiment of blocking means. Figure 8B shows

the sketch of the support structure with hinges 52 in the blocking means. In all these sketches, only the hoop for each level 42, 44 and 46 are shown together with a schematic representation of the blocking means.

Figure 8A shows blocking means having telescopic rods 50, each of which rod slides into another rod to open the support structure from the store state to the open state. In such an embodiment, the flat-folding of the mask 10 corresponds to the shortening of the telescopic rods 50 one into another thereby providing that the levels 44 and 46 are in the vicinity of the base level 42.

Figure 8B shows the blocking means with hinges 52 previously mentioned. The hinges 52 are vertical hinges, i.e. hinges that articulates around vertical axis. Each hinge 52 allows that members 54 connecting the hinge 52 to the levels move close one to another. The movement of the members 54 close one to another may correspond to a radial inward movement of the hinge 52 and provides that the levels 44 and 46 are in the vicinity of the base level 42 in the store state. Each member 54 is linked to a level by the use a further hinge 56 positioned on the level on the contrary to the hinges 52 which are intermediate between the levels, i.e. positioned between two contiguous levels. The movement of the hinges 52 and/or 56 may be blocked with the use of nicks (that will be discussed later).

Figure 8C shows another embodiment with the use of the vertical hinges 56 positioned at each level but without the use of the intermediate hinge 52. With only hinges positioned at each level (hinges 56), in the store state, the hoop of each level may overlap one to another. In this embodiment, the hoops may not be putted in the same plane in a concentric way. The movement of the hinges 56 may be blocked with the use of nicks (that will be discussed later).

Figure 8D shows resilient members 58 as blocking means. These resilient members are in a 'S' form so as to present a bi-stable position. The first position of the resilient members 58 corresponds to a shorten length of the resilient members 58 so as provide that the levels 44 and 46 are in the vicinity of the base level 42 in the store state. The second position of resilient members 58 corresponds to a longer length of the resilient members 58 so as provide the opening out of the levels 44 and 46 toward the exterior with respect to the base level 42. The stability of the second position provides the blocking of the structure of the mask 10 in the opened state.

Figure 8E shows blocking means comprising wires 62. The wires 62 may slide between the hoops of the various levels. The wires 62 are then used with a clamp (not shown) and biasing means (not shown) biasing the levels 44 and 46 out of the base level 42 and biasing also the front level 46 out of the intermediate level 44. The clamp provides the loosing or the tightening of the wires 62. The tightening of the clamp provides that, in the store state, the hoops of the various levels remain in the vicinity one to another clamp. Due to the biasing means, when the clamp looses the wires, the support structure is biased into an opened state.

Figure 8F shows spacers 64 as blocking means. The spacers 64 are used in the opened state to provide a space of a determined distance between each hoop. The spacers 64 are not used in the store state, so that the hoops of the various levels may be brought into vicinity one to another, preferably in a concentric way.

[0034] Similarly to the above various embodiments of the blocking means in figure 8A and 8D to 8F, the support structure may have two blocking means between each contiguous levels, i.e. between levels 42 and 44 and between levels 44 and 46. Between each two contiguous levels, the two blocking means are preferably opposite one to another as illustrated in figures 8A and 8D to 8E.

[0035] The embodiment of figure 8B with intermediate hinges 52 is the preferred embodiment of the blocking means and corresponds to the embodiment of the blocking means shown in figures 4, 7A and 7B. Multiple variants of this embodiment with intermediate hinges 52 may be envisaged.

Figures 9A and 9B show one variant of the blocking means with hinges 52. The blocking means include nicks 72 positioned around an intermediate articulation 70. The nicks 72 provide the blocking of the members 54 in the opened state (figure 9A) and in the store state (figure 9B).

Figures 10A and 10B show another variant of the blocking means with hinges 52. The blocking means include nicks 72 positioned around an articulation 70 on the upper levels. In other words, for considered blocking means between two contiguous levels, the articulation 70 is positioned on the upper level among the two levels. The nicks 72 provide the blocking of the members 54 in the opened state (figure 10A) and in the store state (figure 10B).

Figures 11A and 11B show another variant of the blocking means with hinges 52. The blocking means include nicks 72 positioned around an articulation 70 on the lower levels. In other words, for considered blocking means between two contiguous levels, the articulation 70 is positioned on the lower level among the two levels. The nicks 72 provide the blocking of the members 54 in the opened state (figure 11A) and in the store state (figure 11B).

[0036] For all the variants envisaged in figures 9A to figure 11B, the hinges 52 bend inwardly into the mask in the store state. However, the hinges 52 may also bend outwardly of the mask in the store state. Figures 12A and 12B then show a variant of the blocking means of figures

11A and 11B with the hinge 52 bending outwardly in the store state. Figures 13A and 13B then show a variant of the blocking means of figures 9A and 9B with the hinge 52 bending outwardly in the store state.

Claims

1. A mask body (20) for the protection of the respiratory system of a wearer (80), comprising:

   - a filtering assembly (22)
   - a support structure (40) for supporting the filtering assembly, the support structure having an opened state and a store state in which the mask body (20) is flat-folded, the support structure (40) having several levels (42, 44, 46) linked by blocking means adapted to open out the support structure (40) along the direction of the breathing of the wearer trough the filtering assembly (22).

2. The mask body according to claim 1, wherein the support structure (40) has two blocking means between each contiguous levels (42, 44, 46), each two blocking means being opposite one to another.

3. The mask body according to any one of claims 1 or 2, wherein the blocking means comprise hinges (52, 56).

4. The mask body according to any one of claims 1 or 2, wherein the blocking means are resilient members (58).

5. The mask body according to any one of claims 1 to 4, wherein the support structure (40) comprises at least a hoop for each level (42, 44, 46).

6. The mask body according to any one of claims 1 to 5, wherein the filtering assembly (22) is removable from the support structure (40).

7. A mask (10) comprising the mask body (20) according to any one of claims 1 to 6.

8. The mask according to claim 7, wherein the mask (10) has adjustable headband system (12, 18).

Fig.1

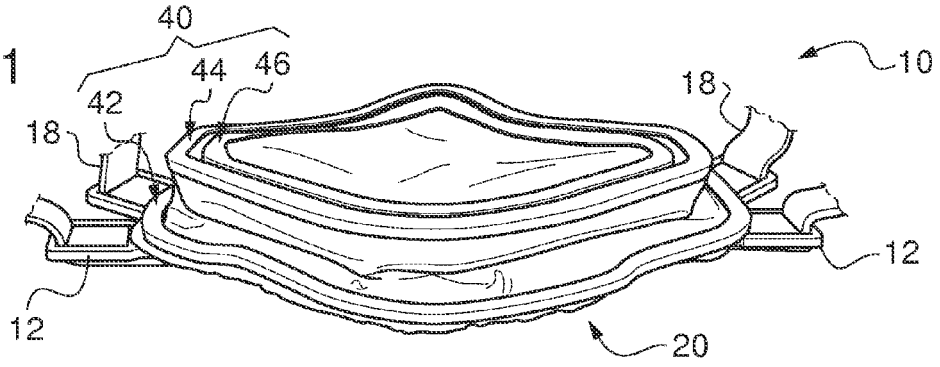

Fig.2

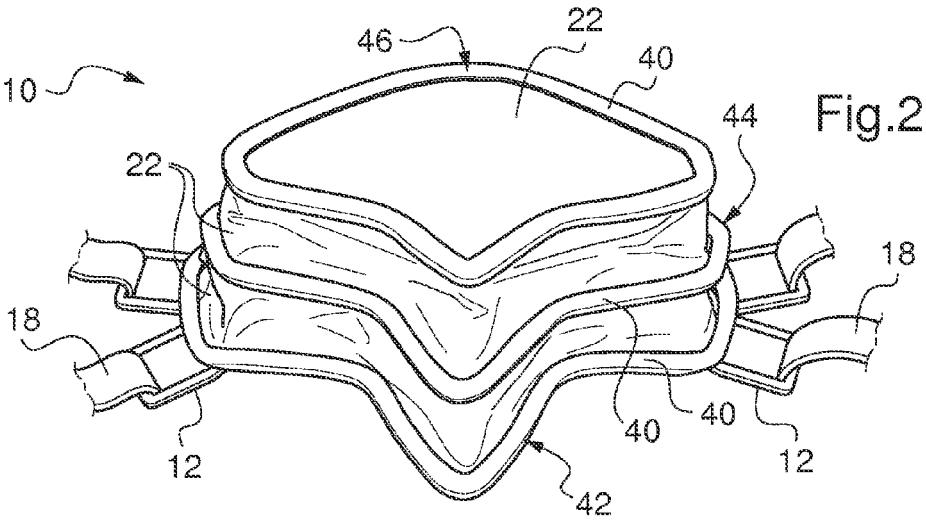

Fig.3

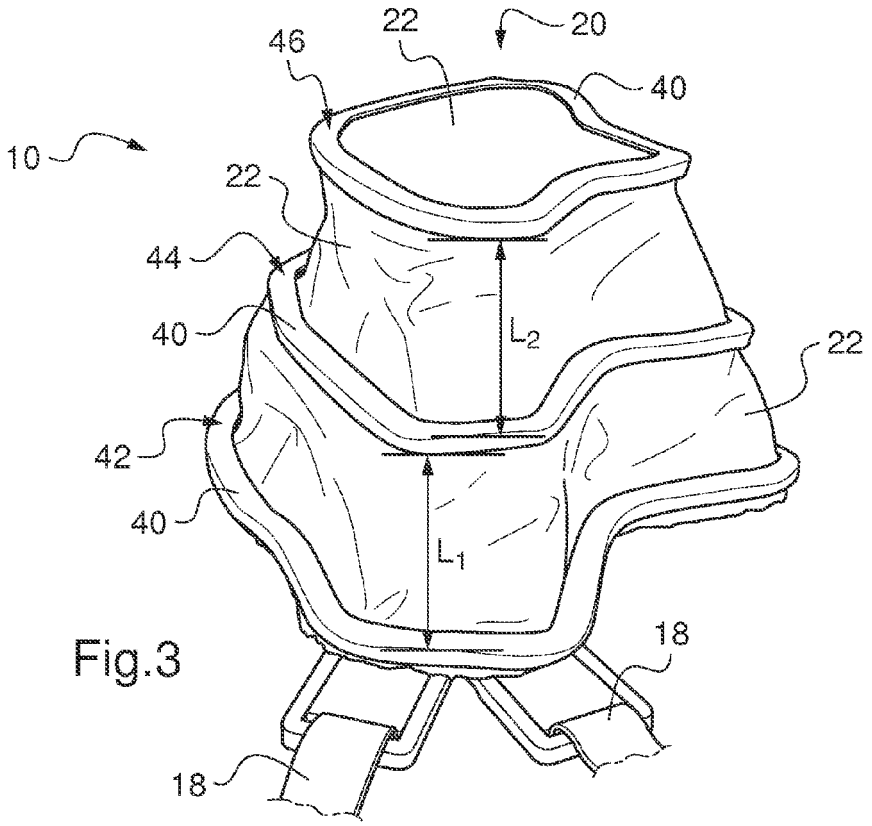

Fig.4

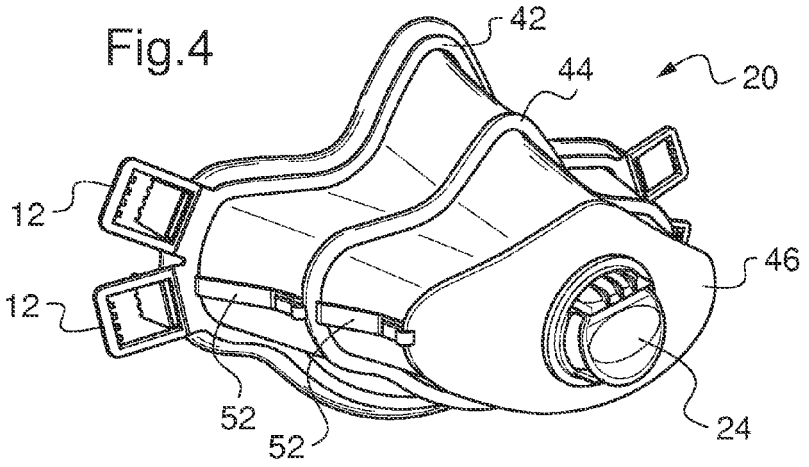

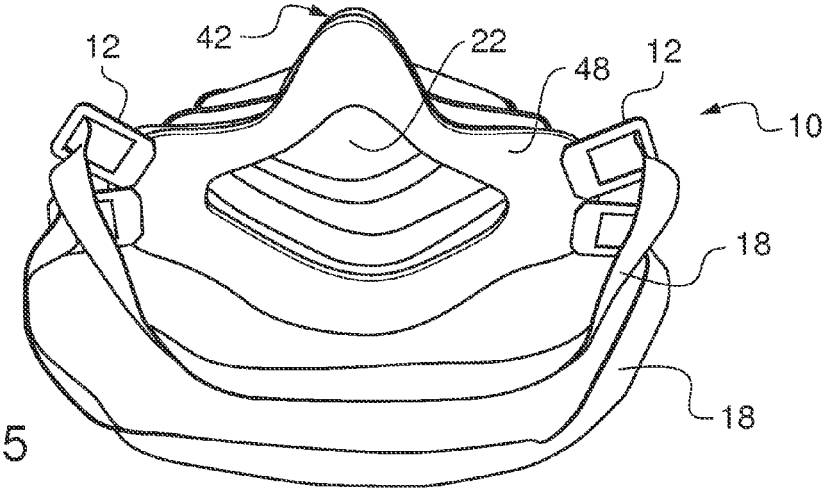

Fig.5

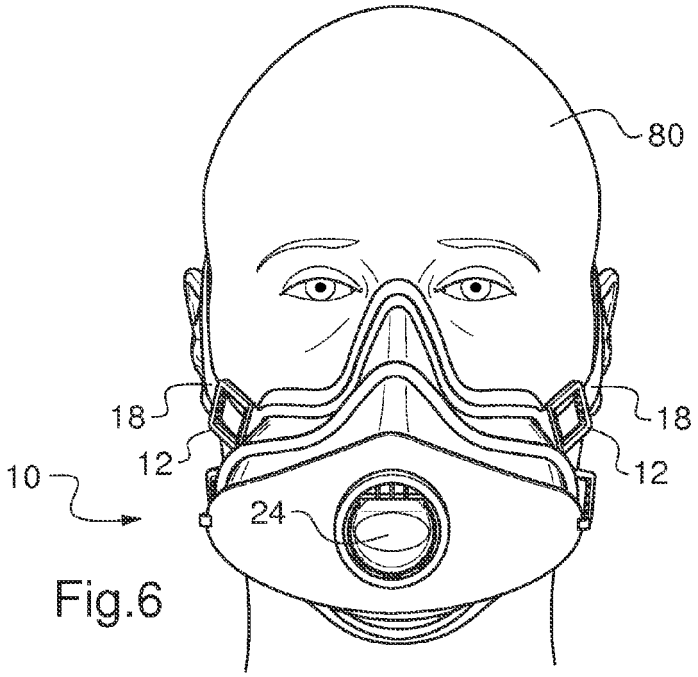

Fig.6

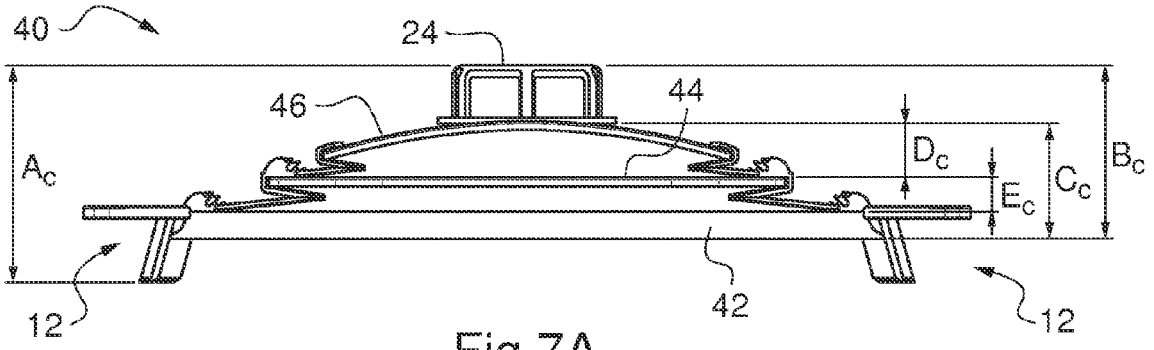

Fig.7A

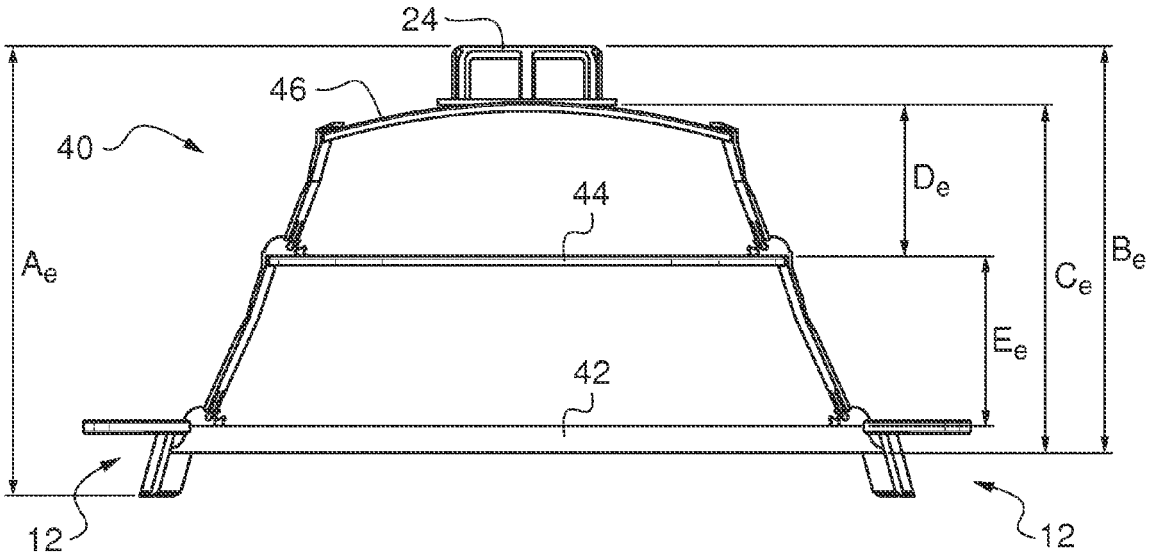

Fig.7B

Fig.8A

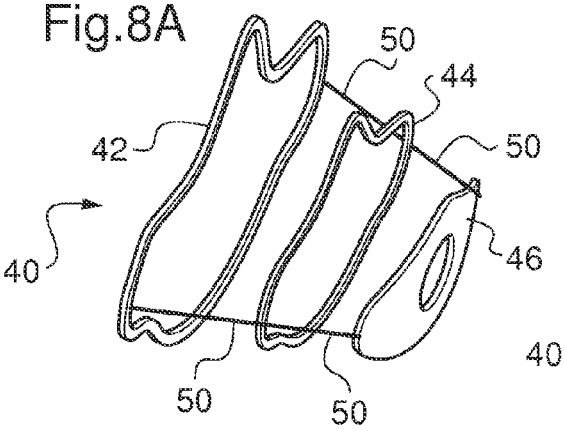

Fig.8B

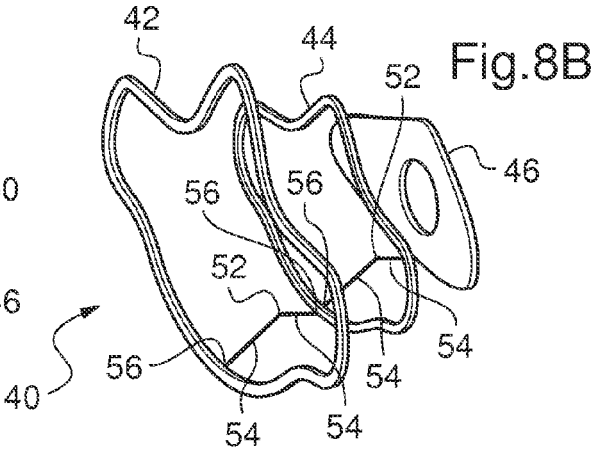

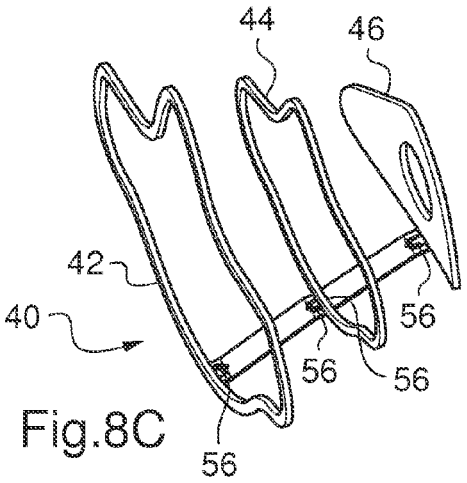

Fig.8C

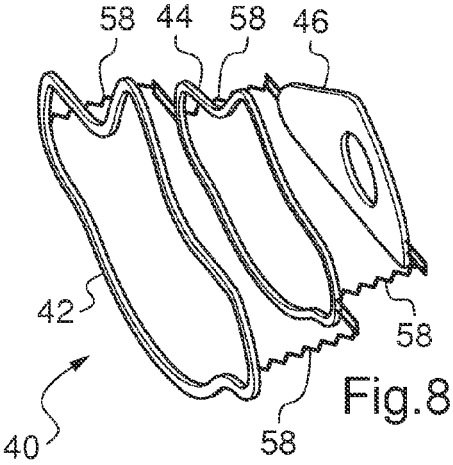

Fig.8D

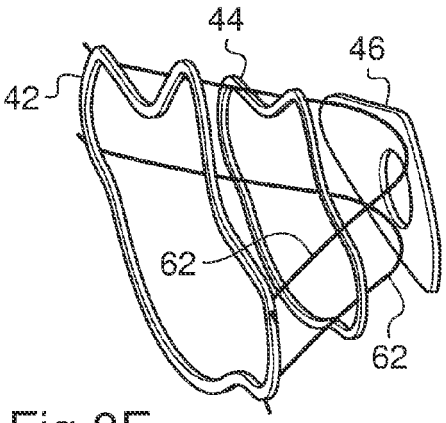

Fig.8E

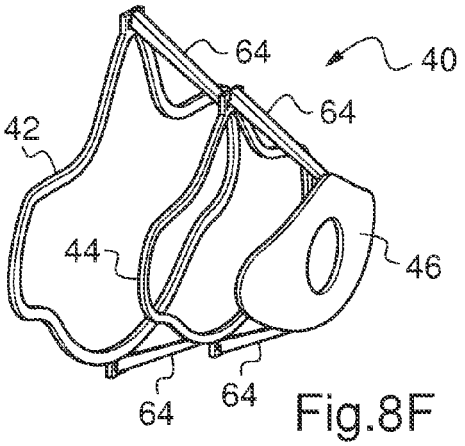

Fig.8F

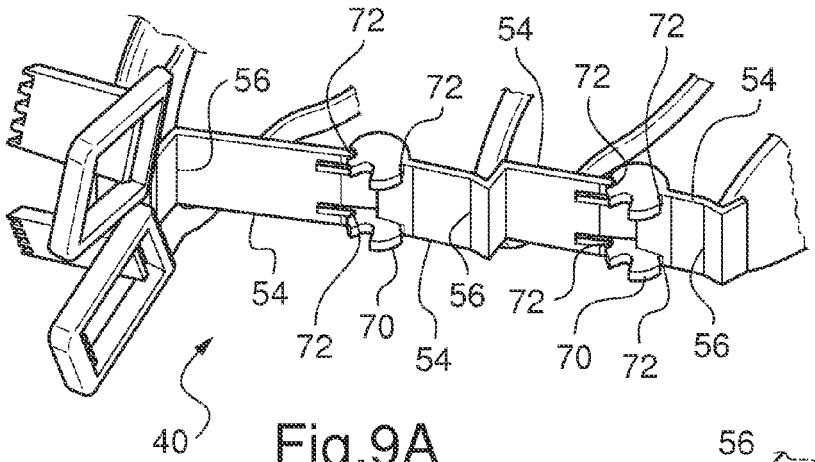

Fig.9A

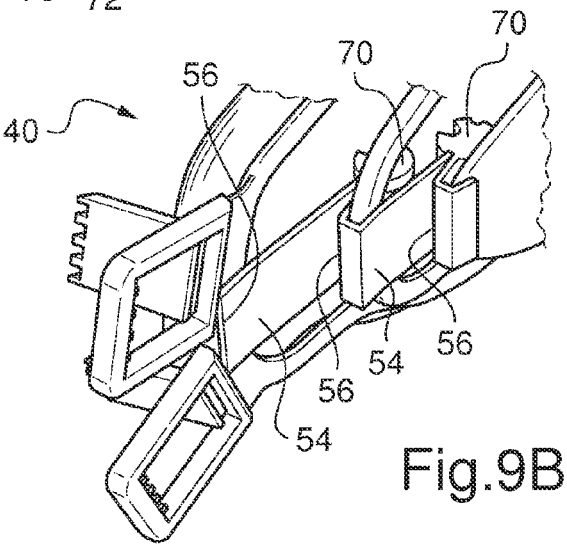

Fig.9B

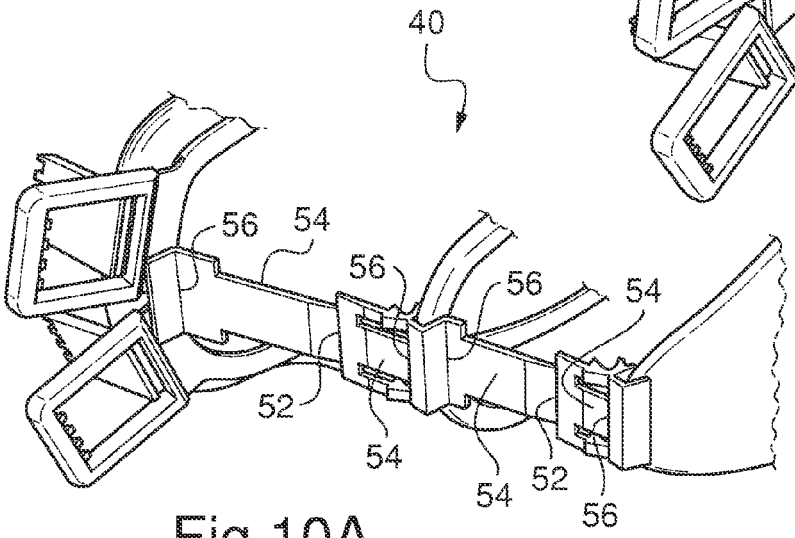

Fig.10A

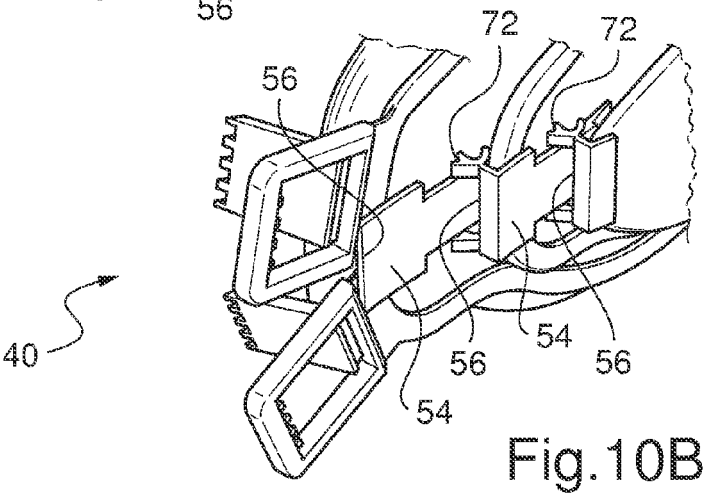

Fig.10B

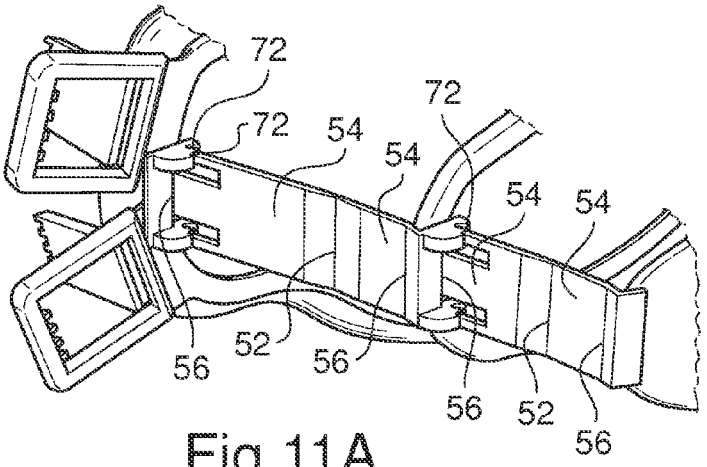

Fig.11A

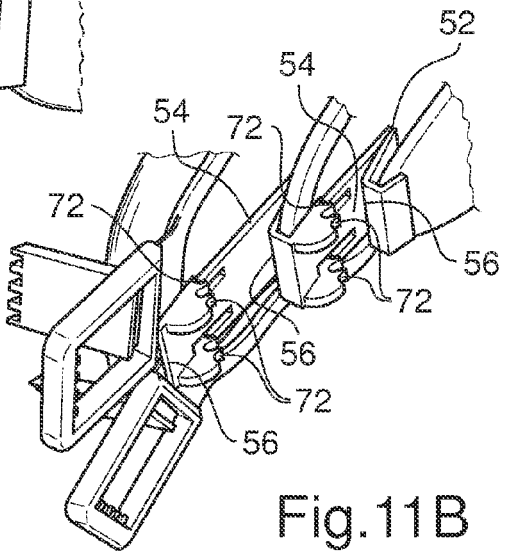

Fig.11B

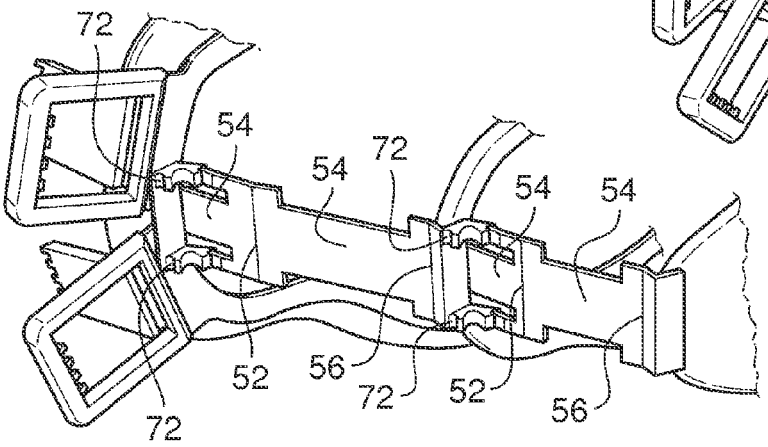

Fig.12A

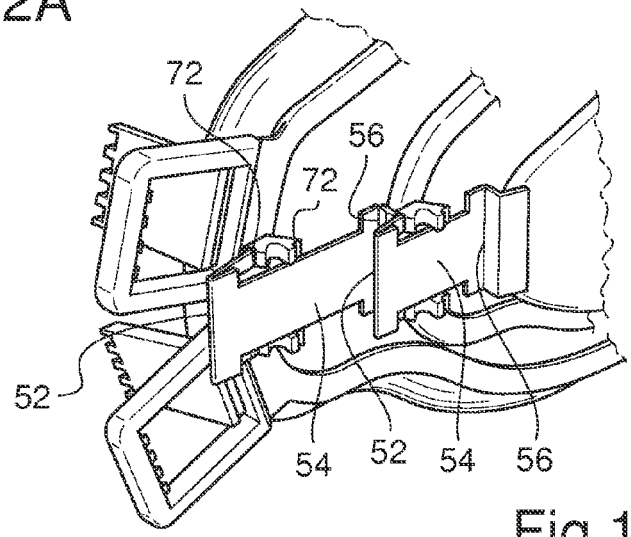

Fig.12B

Fig.13A

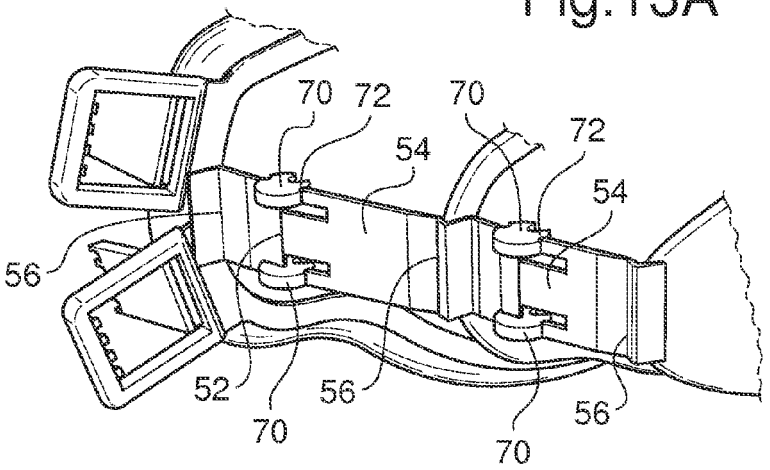

Fig.13B

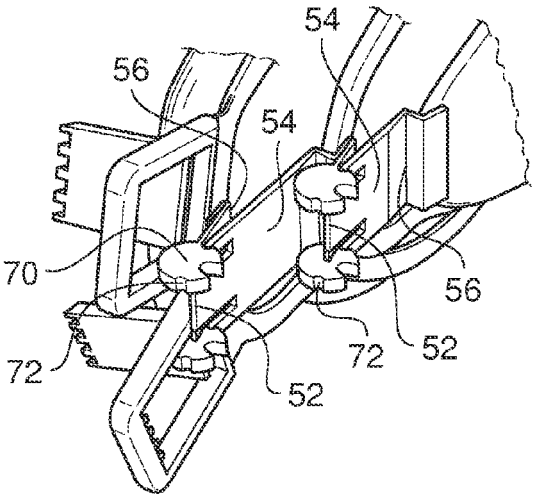

Europäisches Patentamt
European Patent Office
Office européen des brevets

EUROPEAN SEARCH REPORT

Application Number
EP 11 30 5481

DOCUMENTS CONSIDERED TO BE RELEVANT

Category	Citation of document with indication, where appropriate, of relevant passages	Relevant to claim	CLASSIFICATION OF THE APPLICATION (IPC)
X A	US 2 378 929 A (JOYCE WILLIAM J) 26 June 1945 (1945-06-26) * page 1, left-hand column, line 4 - line 9 * * page 1, left-hand column, line 27 - line 29 * * page 1, left-hand column, line 51 - line 53 * * page 2, left-hand column, line 14 - line 59 * * page 2, right-hand column, line 48 - line 70; figures 1-4 * -----	1,7,8 2,3,5	INV. A62B23/02
A	US 2010/229871 A1 (MARX GUSTAV DAVID [CA]) 16 September 2010 (2010-09-16) * paragraph [0023] - paragraph [0027]; figures 4, 5, 6 * -----	4	
A	US 1 502 450 A (WOOD WILLIAM H) 22 July 1924 (1924-07-22) * figure 2 * -----	6	TECHNICAL FIELDS SEARCHED (IPC)
A	US 2010/154806 A1 (DUFFY DEAN R [US]) 24 June 2010 (2010-06-24) * paragraph [0002] - paragraph [0005]; figures 3, 6, 8 * -----	1	A62B A41D

The present search report has been drawn up for all claims

Place of search	Date of completion of the search	Examiner
The Hague	29 September 2011	van Bilderbeek, Henk

CATEGORY OF CITED DOCUMENTS

X : particularly relevant if taken alone
Y : particularly relevant if combined with another document of the same category
A : technological background
O : non-written disclosure
P : intermediate document

T : theory or principle underlying the invention
E : earlier patent document, but published on, or after the filing date
D : document cited in the application
L : document cited for other reasons

& : member of the same patent family, corresponding document

1

EPO FORM 1503 03.82 (P04C01)

ANNEX TO THE EUROPEAN SEARCH REPORT ON EUROPEAN PATENT APPLICATION NO. EP 11 30 5481

This annex lists the patent family members relating to the patent documents cited in the above-mentioned European search report. The members are as contained in the European Patent Office EDP file on
The European Patent Office is in no way liable for these particulars which are merely given for the purpose of information.

29-09-2011

Patent document cited in search report	Publication date	Patent family member(s)	Publication date
US 2378929 A	26-06-1945	NONE	
US 2010229871 A1	16-09-2010	NONE	
US 1502450 A	22-07-1924	NONE	
US 2010154806 A1	24-06-2010	WO 2010080243 A2	15-07-2010

EPO FORM P0459

For more details about this annex : see Official Journal of the European Patent Office, No. 12/82

REFERENCES CITED IN THE DESCRIPTION

This list of references cited by the applicant is for the reader's convenience only. It does not form part of the European patent document. Even though great care has been taken in compiling the references, errors or omissions cannot be excluded and the EPO disclaims all liability in this regard.

Patent documents cited in the description

- WO 2009038934 A **[0004] [0015]**