United States Patent [19]

Pirchl

[11] **3,825,923**

[45] **July 23, 1974**

[54] **VISUAL DISPLAY APPARATUS WITH CHARACTER MATRIX**

[75] Inventor: **Gerhard Pirchl,** Dietikon, Switzerland

[73] Assignee: **Romay AG,** Oberkuln, Switzerland

[22] Filed: **Sept. 8, 1972**

[21] Appl. No.: **287,267**

[30] **Foreign Application Priority Data**

Sept. 15, 1971 Switzerland 13490/71

[52] **U.S. Cl.** ..... **340/336,** 340/378 R

[51] **Int. Cl.** **G09f 9/32**

[58] **Field of Search**.... 340/336, 334, 378 R, 324 R, 340/324 B, 324 S

[56] **References Cited**

UNITED STATES PATENTS

2,426,079	8/1947	Bliss	340/336
3,399,474	9/1968	Rinder	340/336
3,573,813	4/1971	Burns	340/336

Primary Examiner—John B. Caldwell
Assistant Examiner—Marshall M. Curtis
Attorney, Agent, or Firm—Werner W. Kleeman

[57] **ABSTRACT**

An apparatus for the visual indication or display of characters, especially decimal numerical characters, which characters are associated with successive adjustments or settings of an adjustment component and a base body and of which characters there is visually indicated during each adjustment or setting the character associated therewith. The base body comprises a visual surface composed of a character matrix consisting of lines for the characters to be displayed or indicated. There are also provided cover elements adjustable by the adjustment component for the lines of the character matrix in order to cover during successive adjustments the excessive lines of the character matrix which are not needed for the visual display of the relevant character.

16 Claims, 20 Drawing Figures

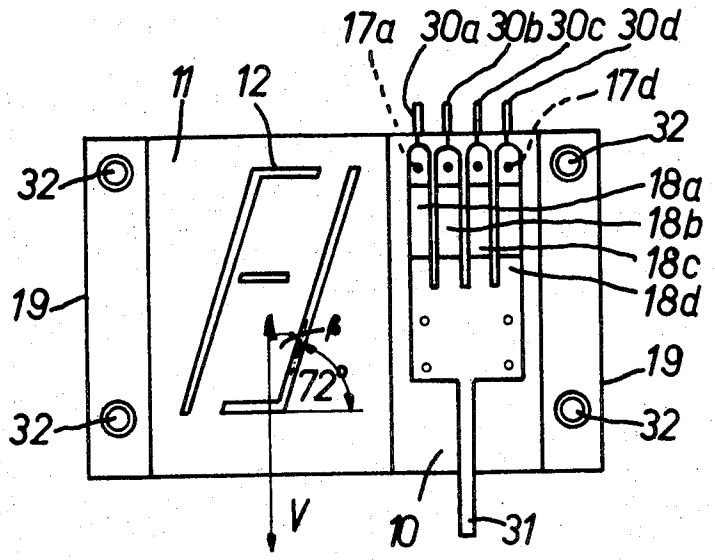

FIG.1

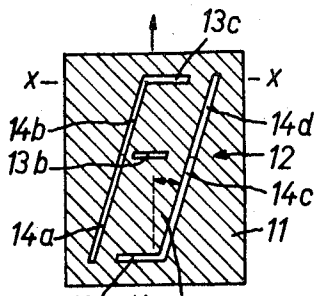

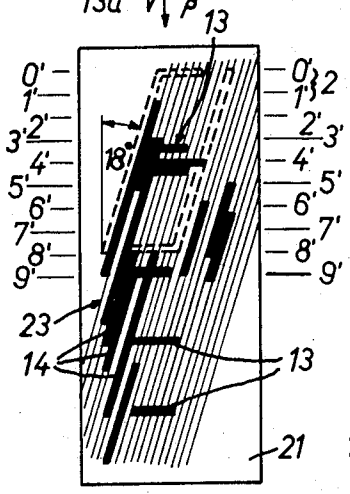

FIG. 2

FIG. 4

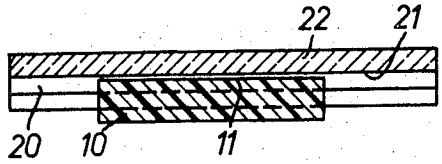

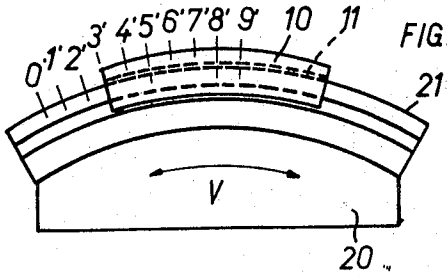

FIG.5

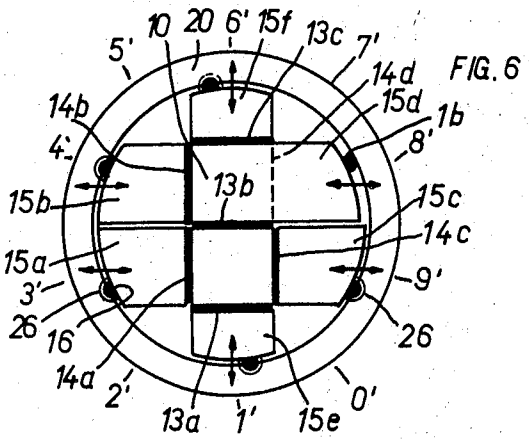

FIG. 6

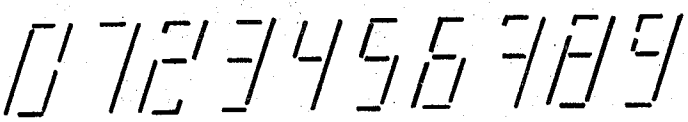

FIG.3

FIG.7

FIG. 8

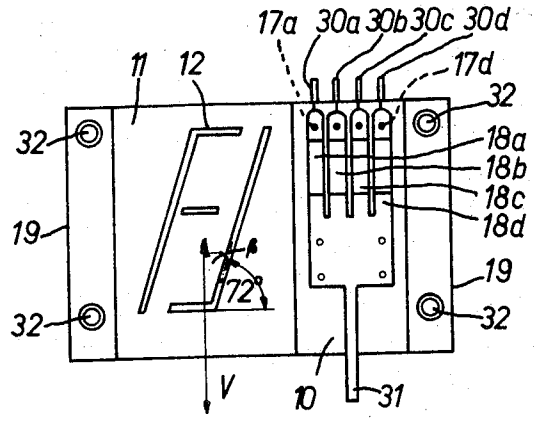
17a
30a
30b
30c
30d
11
12
17d
32
32
18a
18b
18c
18d
19
19
72°
32
32
V
10
31

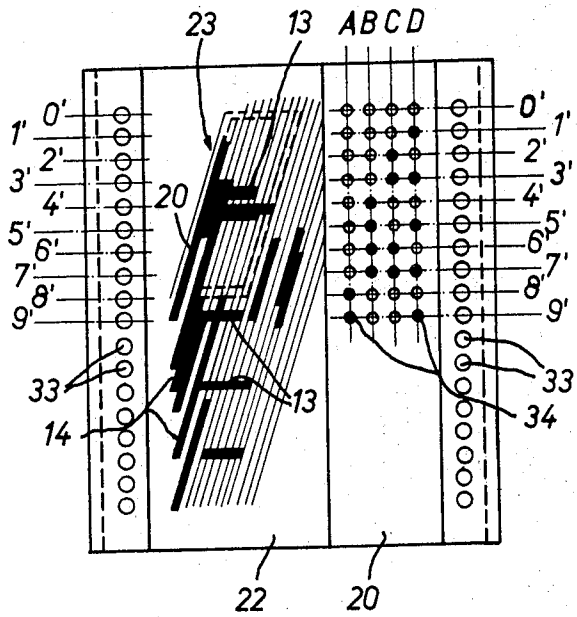
23
13
A B C D
0'
1'
2'
3'
4'
5'
6'
7'
8'
9'
20
33
14
13
0'
1'
2'
3'
4'
5'
6'
7'
8'
9'
33
34
22
20

FIG. 9

FIG. 10

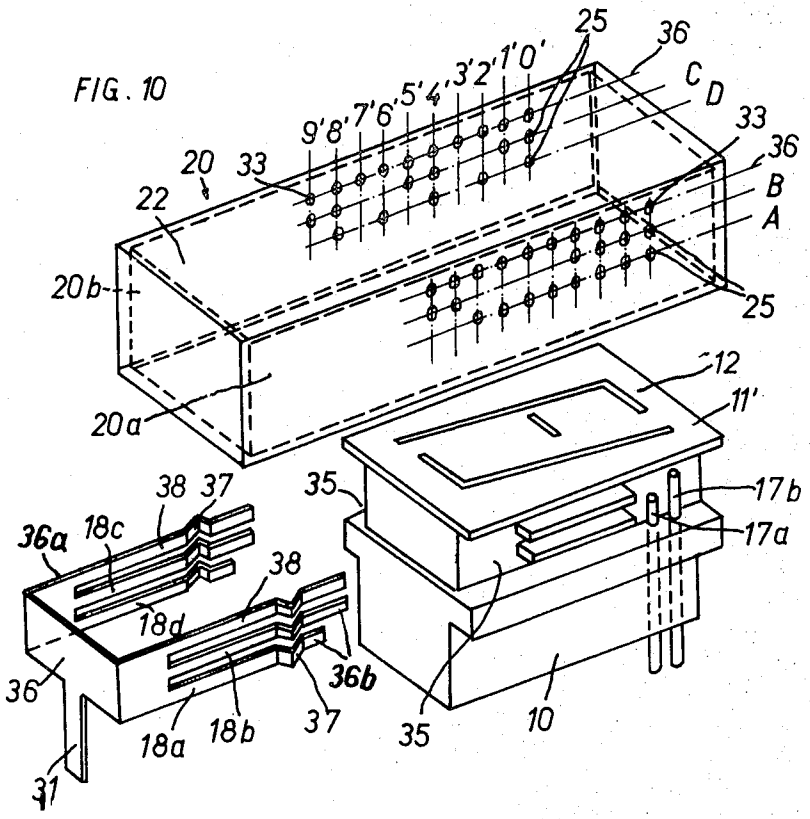
25
36
C
D
33
36
B
A
25
9' 8' 7' 6' 5' 4' 3' 2' 1' 0'
20
33
22
20b
20a
12
11'
17b
17a
35
38 37
36a
18c
38
18d
36b
36
18a
18b
37
35
10
31

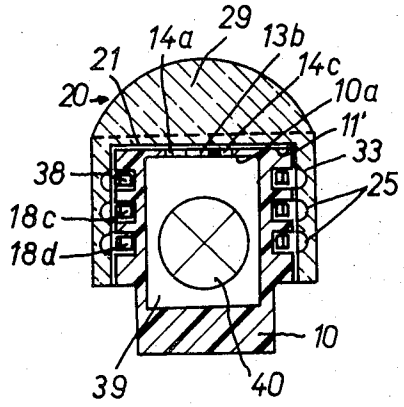
29
14a
13b
21
14c
20
10a
11'
33
38
25
18c
18d
10
39
40

FIG. 11

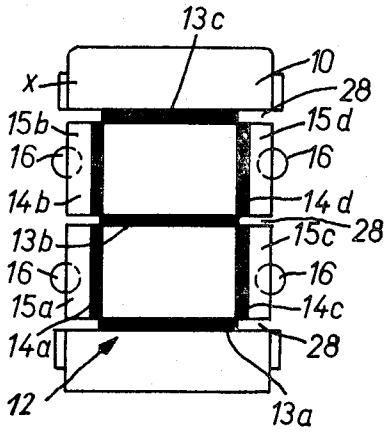

FIG. 12

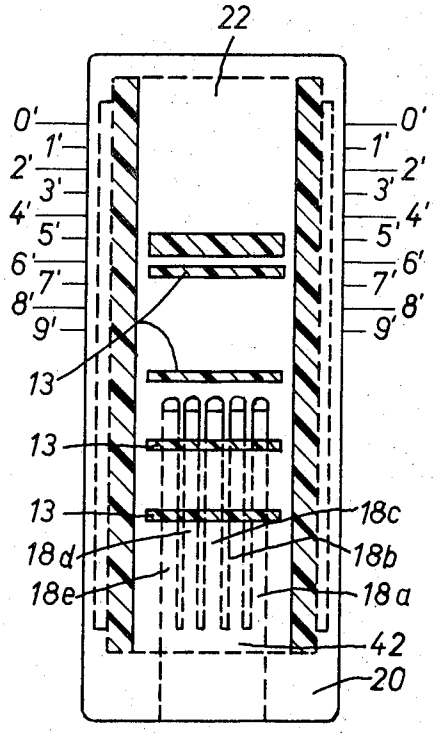

FIG. 13

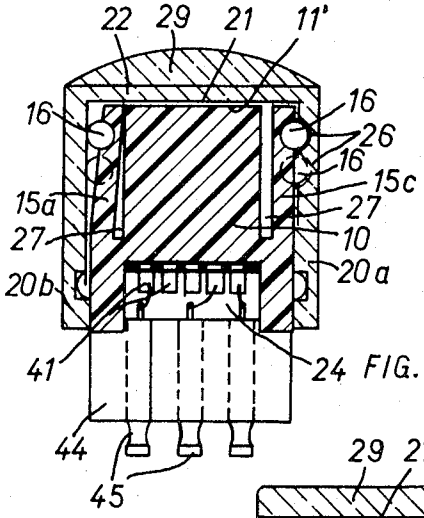

FIG. 14

FIG. 15

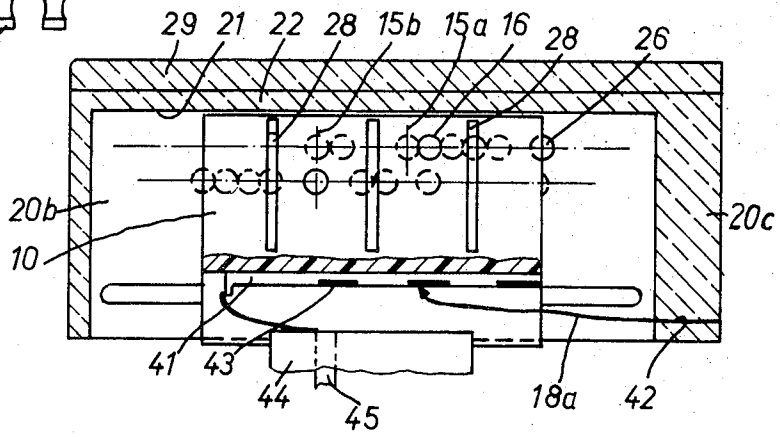

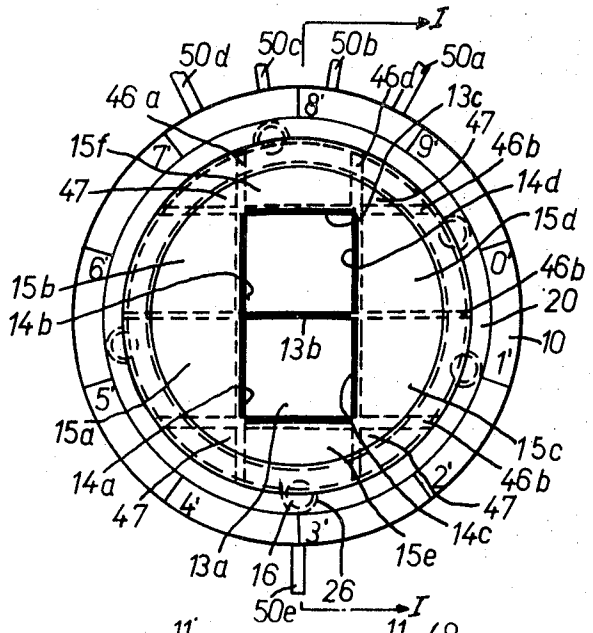
I
50d
50c
50b
50a
46d
46a
13c
47
46b
15f
14d
47
15d
15b
46b
14b
20
13b
10
15a
15c
14a
46b
47
47
14c
13a
16
15e
26
50e
I

FIG 16

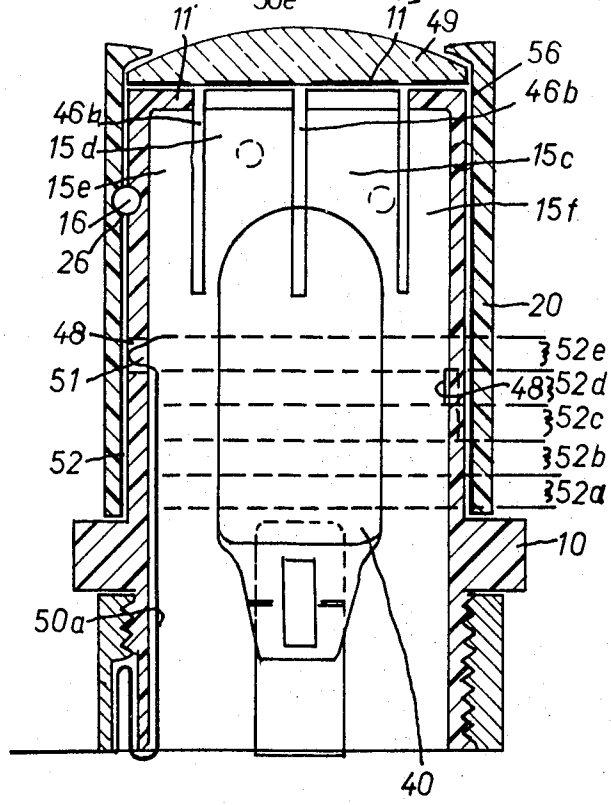
11'
11
49
56
46b
46b
15d
15c
15e
15f
16
26
20
48
52e
51
48
52d
52c
52
52b
52a
10
50a
40

FIG 17

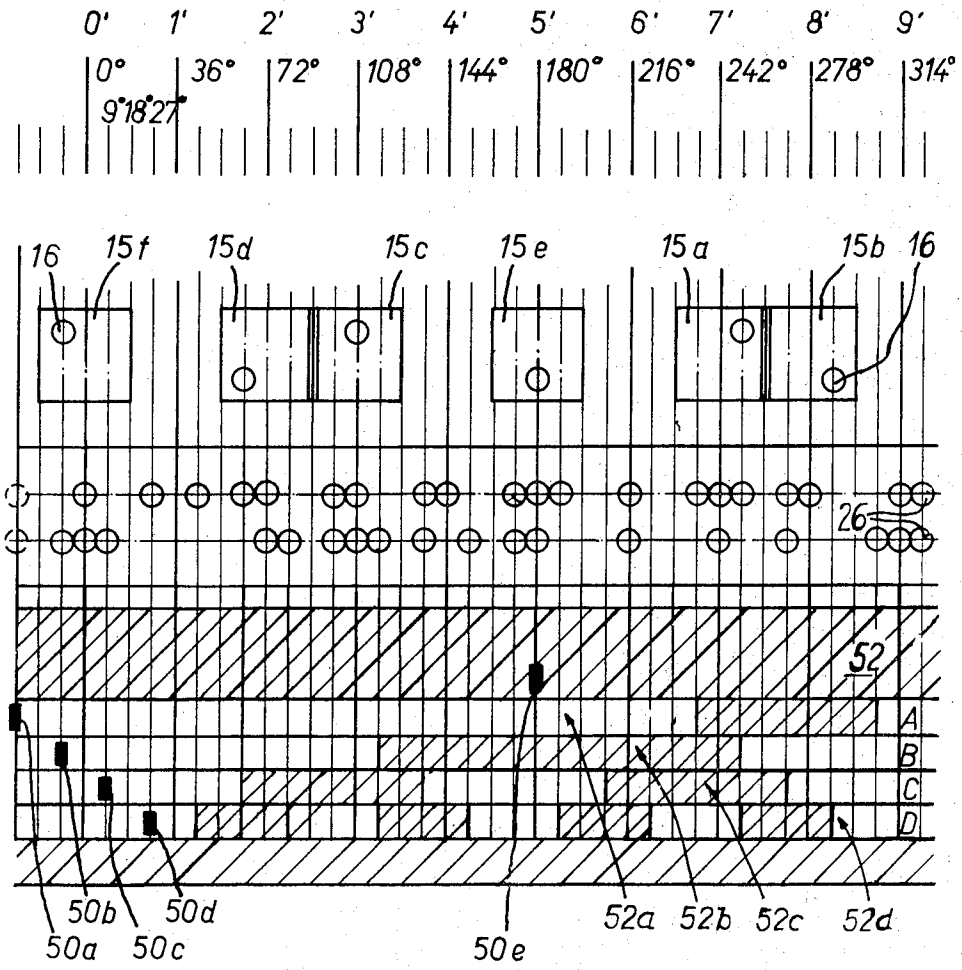
0'
1'
2'
3'
4'
5'
6'
7'
8'
9'
0°
36°
72°
108°
144°
180°
216°
242°
278°
314°
9°18°27°
16
15f
15d
15c
15e
15a
15b
16
26
52
A
B
C
D
50a
50b
50c
50d
50e
52a
52b
52c
52d

FIG. 18

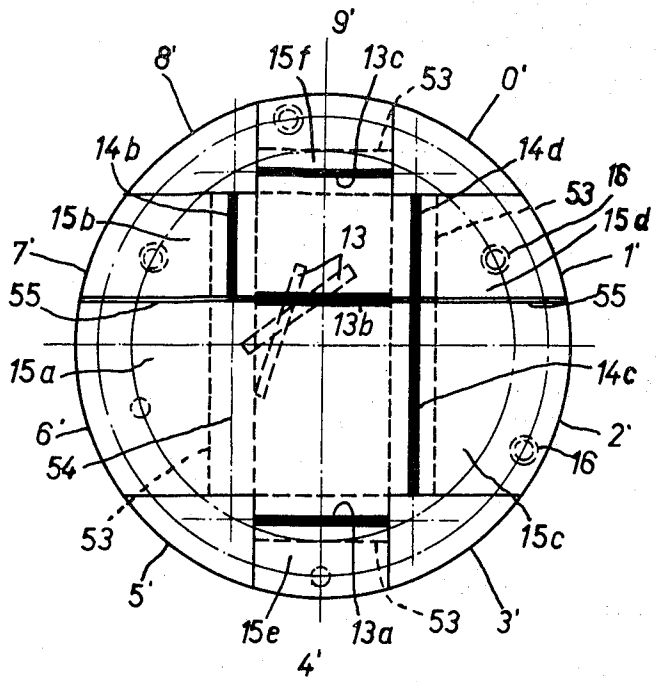
9'
8'
15f
13c
53
0'
14b
14d
16
53
15b
15d
7'
13
1'
55
55
13b
15a
14c
6'
2'
54
16
53
15c
5'
15e
13a
53
3'
4'

FIG. 19

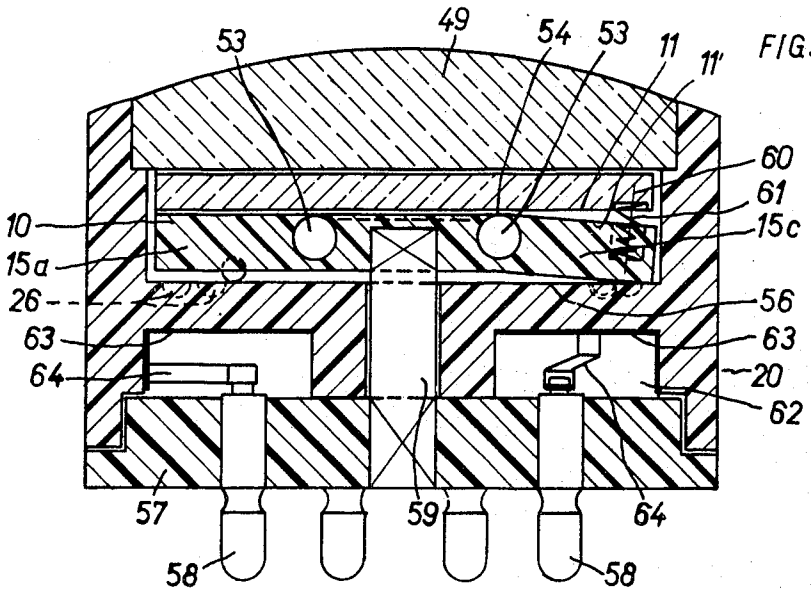
53
49
54
53
11
11'
60
61
10
15c
15a
26
56
63
63
64
20
62
57
59
64
58
58

FIG. 20

VISUAL DISPLAY APPARATUS WITH CHARACTER MATRIX

BACKGROUND OF THE INVENTION

The present invention relates to a new and improved apparatus for the visual indication or display of characters, especially decimal numbers or numerical characters, associated with successive adjustments or settings of an adjustment or setting component and a base body and of which characters there is visually indicated during each adjustment the character associated therewith, and furthermore, this invention relates to the use of the visual indicator or display apparatus for encoding the decimal numerical characters according to a binary or dual code wherein the binary numbers are portrayed by open and closed switches.

For encoding numerical characters there are known in the art so-called code or coding switches, wherein there is provided for each binary place or position of the code a switch element, for instance at a base body. At the base body there is mounted an adjustment component consisting generally of a rotatable disk or plate which is adjustable to engaging or locking positions associated with the individual numerical characters and for each locking or engaging position indicates both the therewith associated numerical character and also appropriately actuates the switching elements of the coded word of the adjusted or set numerical character. At the periphery of the adjustment disk there are usually provided finger recesses for facilitating setting to the locking positions. Owing to these recesses and especially because of the size of the characters required for a positive and rapid recognition of the adjusted numerical character the adjustment disks must be chosen to be rather large in size. Hence, during the assembly of installations composed of units assembled from a great many coding switches their considerable spatial requirements become quite disadvantageous. Oftentimes the decimal numerical characters are encoded in a binary-coded-decimal notation, in which case the switch then possesses four outputs connected to switching elements. If it is desired to change from one binary-coded-decimal notation to another at an installation, then, it is necessary to either replace the existing code switches for others or to exchange the adjustment disks, both of which procedures are rather time-consuming. Moreover, the fabrication costs for the known coding switches are extremely uneconomical.

It is also known to the art to bring about display of decimal numerical characters by means of a numerical character matrix composed of seven luminous lines, wherein in each case the luminous lines of the matrix portraying the relevant numerical characters illuminate and the remaining matrix lines remain dark. For forming the luminous lines there are generally employed thermionic filaments or glow tubes for which there must then be provided their own switches. Such luminous indicator or display devices are voluminous and expensive, and additionally, can only be used to advantage in a limited number of situations. They are not suitable for a coding switch for encoding numerical characters.

SUMMARY OF THE INVENTION

Hence, from what has been discussed above it should be apparent that this particular field of technology is still in need of equipment for visual indication or display of characters in a manner not associated with the aforementioned limitations and drawbacks of the prior art constructions. Thus, it is a primary object of the present invention to provide an improved apparatus for the visual indication or display of characters which effectively and reliably fulfills the existing need in the art and is not associated with the aforementioned drawbacks and limitations of the prior art constructions.

Another and more specific object of the present invention relates to a new and improved construction of apparatus for the visual indication of characters which is equipped with clearly recognizable, sufficiently large characters, especially numerical characters and possessing small dimensional size, can be fabricated at low cost, and additionally can be advantageously employed in a versatile manner, especially in combination with a coding switch for encoding decimal numerical characters according to a binary code.

Still a further significant object of the present invention relates to a new and improved construction of apparatus for the visual indication of characters or the like which is relatively simple in construction and design, extremely economical to manufacture, highly reliable in operation, particularly indicating in a clearly descernible manner the desired characters which are to be portrayed at any given time, further is not readily subject to malfunction and requires a minimum of servicing and maintenance.

Now in order to implement these and still further objects of the invention, which will become more readily apparent as the description proceeds, the invention contemplates that the base body possesses a visual surface with a character matrix consisting of lines for the characters which are to be displayed or indicated. There are also provided cover elements adjustable by the adjustment components for the lines of the character matrix in order to cover during successive adjustments the lines which are excessive or unnecessary for the display of the momentary relevent character at the character matrix.

For the use of the visual indicator apparatus for encoding decimal numerical characters according to a binary code the visual surface of the base body is provided with a numerical character matrix and each of the successive adjustments or settings of the base body and adjustment or setting component are clearly fixed by locking or engaging means and for each binary position of the code there are provided two contact pieces or elements which can be closed, these contact elements being appropriately opened and closed during adjustment of the adjustment component to the setting of the coded message or word of the numerical character associated with the adjustment.

There is advantageously provided at the visual surface of the base body a seven-line character matrix consisting of linear longitudinally and transversely extending lines or markings. By covering predetermined ones of the lines it is possible to portray the ten decimal numerical characters or numbers and a great number of large letters in a stylized form. The apparatus can be designed as a sliding- or rotary visual indicator or display apparatus. In the case of a sliding visual indicator or display apparatus the adjustment component and base body in successive adjustments or settings can be displaced transverse to the transverse lines or markings of the character matrix. The adjustment or setting com-

ponent can possess a cover surface which slides over the visual surface of the base body, upon which are arranged as cover elements transverse extending cover lines for the transverse lines which are to be covered of the character matrix in the successive settings or adjustments. The character matrix can be arranged at the visual surface of the base body with lengthwise or longitudinal extending lines which extend at an inclination with regard to the displacement direction of the adjustment or setting component and the cover elements for the longitudinal extending lines which are to be covered of the character matrix can be longitudinal extending cover lines arranged at the cover surface in the successive settings or adjustments, whereby it is possible to obtain close or short spacing of successive settings or adjustments, and therefore, a small total length of the equipment. In this regard there can be obtained sufficiently wide matrix lines for achieving good visual display or indication, in that the lengthwise extending lines of the character matrix are inclined with regard to the displacement direction of the adjustment or setting component through an angle of 15° to 20°, preferably **18°**. Each lengthwise extending line of the character matrix which is to be covered can be also formed by a slot-shaped opening at the visual surface of the base body, and the cover elements for such lengthwise extending lines can be resilient tongues of the base body having front surfaces located at a front surface of the base body, and which can be adjusted by the adjustment component in the successive settings or adjustments and cover the lengthwise extending lines by closing the slot-shaped openings.

In the case of a rotary or rotational visual indicator or display apparatus the adjustment or setting component can be rotatable in successive adjustments at the base body about an axis of rotation which is perpendicular to the planar front surface and extending through the diagonal point of intersection of the character matrix, wherein each of the four lengthwise extending lines and both of the outer transverse extending lines of the seven-line character matrix is formed by a slot-shaped opening at the front surface of the base body. Moreover, the cover elements for these lines of the character matrix constitute reilient tongues of the base body with surfaces lying at the front surface, these tongues being adjustable by the adjustment component in the successive adjustments or settings and cover the aforementioned lines of the matrix by closing the slot-shaped openings. In this regard the central transverse line of the character matrix can be continuously visible, so that there are produced characters, each of which possess such central transverse line, or the central transverse line can be also covered in that a cover surface with appropriately arranged transverse extending cover lines is arranged over the front surface of the base body.

Now in the case of sliding and rotary visual indicator apparatuses the base body can consist of a parallelepiped-shaped or cylindrical plastic block, wherein the resilient tongues can be formed by notches or cutouts at the front surface and lateral or peripheral separation or parting cuts, so that the base body can possess small width and small diameter and the size of the front surface is essentially determined by the size of the character matrix. Such relatively high exemplary embodiments of base body afford the advantages that the base body can be formed by a hollow body member and the character matrix by slot-shaped openings at the hollow body wall possessing the front surface. In this connection it should be mentioned that embodiments of the invention can be realized with resilient tongues as cover elements possessing visual surfaces in order to only render visible the character matrix with deep black appearing lines. Additionally, there then exists the possibility of internally illuminating by means of a light source arranged in the hollow compartment of the base body, the character matrix consisting of slot-shaped openings.

The base body also can be fabricated from plastic in the form of a disk or plate, wherein for forming the resilient tongues and the lines associated therewith of the character matrix there can be provided lateral separation or parting cuts and at the front surface thin notches or cuts, so that during bending of a tongue the cut spreads apart and the walls of the cut are visible as lines of the character matrix. Beneath the thin cuts at the front surface there can be provided at the plastic plate hollow compartments or spaces.

In order to adjust the tongues the adjustment or setting component can possess a travelling or running surface having recesses and associated with the tongues, wherein the cams of the tongues engage with such recesses in order to render visible the lines of the character matrix.

BRIEF DESCRIPTION OF THE DRAWINGS

The invention will be better understood and objects other than those set forth above, will become apparent when consideration is given to the following detailed description thereof. Such description makes reference to the annexed drawings wherein:

FIG. **1** illustrates the visual surface of the base body or foundation of a visual indicator or display apparatus designed according to the teachings of the present invention and having a seven-line character matrix;

FIG. **2** illustrates a cover surface with a cover line pattern belonging to the visual surface of the arrangement of FIG. **1**;

FIG. **3** illustrates the ten decimal numerical characters obtained during displacement of the cover surface and visual surface of FIGS. **1** and **2**;

FIG. **4** is a cross-sectional view of a simple flat visual indicator or display apparatus having an adjustment component designed as a slide member and a planar visual surface and cover surface;

FIG. **5** schematically illustrates in side view a visual indicator or display apparatus having cylindrical visual surface and cover surface;

FIG. **6** schematically illustrates a rotatable visual indicator or display apparatus having a seven-line character matrix, the peripheral lines of which are covered by resilient tongues and the central transverse line of which is continuously visible;

FIG. **7** illustrates the ten decimal numerical characters indicated at the visual surface during rotation of the adjustment component of the apparatus of FIG. **6**;

FIG. **8** is a plan view of a base body with a character matrix of the type shown in FIG. **1** for a parallel code switch for encoding decimal numerical characters according to a binary-coded-decimal notation;

FIG. **9** is a plan view of an adjustment component designed as a slide and belonging to the base body of the

arrangement of FIG. **8** and having the cover line pattern of FIG. **2**;

FIG. **10** is a perspective view of the base body, the adjustment component and the switch elements of a parallelepiped-or quadratic-shaped slide code switch with visual indication or display of the numerical characters;

FIG. **11** is a cross-sectional view of a coding switch with illumination of the character matrix and an adjustment disk with cylindrical lens;

FIG. **12** is a plan view of the base body of a slide visual indicator apparatus wherein the lines of the character matrix can be covered by resilient tongues;

FIG. **13** is a plan view of the adjustment slide belonging to the base body of the arrangement of FIG. **2** and with a cover line pattern consisting of transverse lines;

FIG. **14** is a cross-sectional view of a slide coding switch consisting of the base body of the arrangement of FIG. **12** and the adjustment component of FIG. **13**;

FIG. **15** is a longitudinal sectional view of the slide coding switch of FIG. **14**;

FIG. **16** is a plan view of a rotatable coding switch of cylindrical configuration with visual indication or display of the numerical characters by means of a seven-line character matrix;

FIG. **17** is a cross-sectional view of the coding switch of the arrangement of FIG. **16**, taken substantially along the line I—I thereof;

FIG. **18** illustrates in the form of a development view the positions of the cover tongues, engaging or locking recesses for the cams of the tongues and the contact springs for the code or coding switch of the arrangement of FIGS. **16** and **17**;

FIG. **19** is a plan view of a rotary visual indicator or display apparatus having a seven-line character matrix wherein the central transverse line can be covered during setting or adjustments; and

FIG. **20** is a sectional view of a coding switch having a visual indicator or display apparatus of the type depicted in FIG. **19**.

DETAILED DESCRIPTION OF THE PREFERRED EMBODIMENTS

Describing now the drawings, in FIGS. **1** to **4** there is illustrated by way of example an embodiment of the invention which is of particularly simple design, of flat or planar construction and serving for the visual indication or display of the ten decimal numerical characters or numbers 0 to 9. FIG. **4** is a longitudinal sectional view through this visual indicator or display apparatus. It will be seen to embody a base body or foundation **10** which has the form of a flat parallelepiped and consists for instance of a black dyed plastic. At the base body **10** there is displaceably arranged a slide member or slide consisting of transparent plastic and serving as an adjustment component or part **20**. The front surface of the base body **10** is designed as a visual surface **11** (FIG. **1**) which carries a so-called seven-line character matrix **12**, consisting of white lines or markings, serving for the portrayal or display of the decimal numerical characters or numbers. In particular, this seven-line character matrix **12** will be understood to consist of three parallel transverse extending lines **13***a*, **13***b*, **13***c* and four longitudinal or lengthwise extending lines **14***a*, **14***b*, **14***c*, **14***d* which collectively, as known, form a stylized **8**.

Continuing, the adjustment or setting component **20** consisting of transparent plastic forms a window **22** which during displacement slides over the visual surface **11** of the base body **10**. The face or side of the window **22** which confronts the visual surface **11** carries a cover line pattern **23** (FIG. **2**) and is referred to hereinafter as the cover or covering surface **21**. Since the ten decimal numbers or numerical characters should be displayed there are provided at the base body **10** and the adjustment component **20** ten successive adjustments or settings **0'** . . . **9'**, which in the illustrated exemplary embodiment have the same spacing from one another. The decimal numbers 0 . . . 9 have been shown in FIG. **3**. If the marking **0'** of the cover surface **21** is located at the marking X of the visual surface **11**, then, for instance, there should be displayed or indicated the character null. As should be apparent in this set or adjusted position **0'** it is necessary that there be covered the central transverse line **13***b* of the character matrix **12** by a transverse extending cover line **13**; in order to display the numerical character **1** in the set or adjusted position **1'** (marking **1'** is located at the marking X) it is necessary to cover the longitudinal or lengthwise extending lines **14***a*, **14***b* of the character matrix **12** and its transverse extending lines **13***a* and **13***b*, and so orth.

Owing to the black background of the visual surface **11** the cover line pattern **23** of the cover surface **21** accordingly consists of black transverse extending cover lines **13** and longitudinal extending cover lines **14** which, in the displacement direction V of the adjustment component **20**, are offset with respect to one another in accordance with the successive settings or adjustment positions **0'** . . . **9'**. It is only possible to obtain a close spacing of the successive settings or adjustment **0'** . . . **9'** if the lengthwise or longitudinal extending lines **14***a* . . . **14***d* of the character matrix **12** and accordingly the longitudinal or lengthwise extending cover lines **14** of the cover surface **21** extend at an inclination or obliquely with respect to the displacement direction V of the adjustment component **20**. As far as the width of the longitudinal extending lines **14***a* . . . **14***d* is concerned there is decisive their inclined position and for the character image the configuration and design of the character matrix **12**. The illustrated character matrix **12** extends over eight settings or adjustment positions (FIG. **2**) from the setting **0'** to the setting **9'** and its longitudinal extending lines are inclined with regard to the displacement direction by 18°. The width of the longitudinal extending lines can amount to a maximum of $a \cdot \sin\beta$, wherein a represents the spacing of two successive settings or adjustments and the symbol β the angle of inclination. In the case of an adjustment spacing $a = 1$ mm. and an angle of inclination $\beta = 18°$ the character matrix is accordingly 8 mm. high and the longitudinal extending lines **14***a* . . . **14***d* can have a width of approximately 0.3 mm.. The width of the matrix transverse extending lines **13***a*, **13***b*, **13***c* at most can amount to one-third a. The lower transverse extending line **13***a* is located at the lower third of an adjustment band or region between two successive adjustments or settings, the middle transverse extending line **13***b* at the central third, in the illustrated embodiment at the adjustment region or band between the adjustment positions or settings **3'** and **4'**, and the upper

transverse extending line **13c** at the upper third of an adjustment band or region.

The spacing of the left lengthwise extending lines **14a**, **14b**, from the right lengthwise or longitudinal extending lines **14c**, **14d** of the character matrix **12** amounts to $10a \cdot \sin\beta$, that is to say **10** "line widths" $a \cdot \sin\beta$. The upper transverse extending line **13c** applied to the upper end of the left upper longitudinal extending line **14b** extends a distance corresponding up to three line widths towards the right longitudinal extending line **14d**, and similarly, the lower transverse extending line **13a** arranged at the lower end of the right lower longitudinal extending line **14c** extends a distance corresponding up to three line widths forwardly of the left longitudinal extending line **14a** of the character matrix **12**, as best seen by referring to FIG. **2**. The central transverse extending line **13b** of the character matrix **12** possesses a length corresponding to five line widths and from the left longitudinal extending line possesses a spacing of one line width and from the right longitudinal extending line a spacing of three line widths. For the portrayal or display of the ten decimal numbers 0 . . . 9 in the form depicted in FIG. **3** there are required at the cover or covering line pattern **23** six transverse extending cover lines **13** and ten longitudinal extending cover lines **14** in the arrangement depicted in FIG. **2**. Such visual indicator or display apparatus can be employed, for instance, in order to digitally indicate linear displacements of a machine component.

FIG. **5** schematically illustrates in front view a visual indicator or display apparatus by means of which there can be digitally indicated small angles of rotation. In the illustrated exemplary embodiment the adjustment component **20**, fabricated for instance from metal, possesses a cylindrical cover surface **21** which, for instance, carries at the black background the cover line pattern **23** of FIG. **2** consisting in this case of light lines. The base body **10** which can be displaced over the cover surface **21** possesses a visual surface **11** which is curved in accordance with the cover surface **21**, the background or undersurface of which is accommodated to the color shade or color of the cover lines. The character matrix consists of transparent line-shaped recesses at the base or background of the visual surface, so that there is visible therethrough the black base surface or background of the cover surface and a line of the character matrix is practically non-visible when a cover line of the cover surface is displaced beneath the opening.

Oftentimes characters, especially numerical characters are associated with certain angular positions of a rotatable component, for instance the shaft of a rotatable switch, and which should then be indicated at the relevant setting or adjustment position. FIG. **6** schematically illustrates an embodiment of visual indicator or display apparatus wherein through rotation of a ring-shaped adjustment component **20** at a circular front surface there can be successively indicated the ten numerical characters or numbers 0 . . . 9. The successive settings or adjustments are designated by reference character **0'** . . . **9'**. The four longitudinal or lengthwise extending lines **14a** . . . **14d** and the upper as well as lower transverse extending lines **13a**, **13c** of the character matrix **12** are formed by slot-shaped openings between the peripheral sides of a rectangular central portion of the base body **10** and appropriately arranged resilient tongues or tongue members **15a** . . . **15f** which bear at the inner wall of the ring-shaped adjustment component **20**. These tongues possess surfaces which lie at the front plane and which, together with the surface of the central portion, form the front surface of the base body **10** and, for instance, can be in a white color. The walls of the slot-shaped openings are for instance black, so that the matrix lines formed by the openings are clearly visibly discernible. The central transverse extending line **13b** of the character matrix is, for instance, a black transverse line at the central portion of the base body **10**. Upon pressing a tongue **15** against the central portion of the base body **10** the associated slot-shaped opening is closed and the matrix line formed by this opening is practically invisible.

Further, with the exemplary embodiment of FIG. **6** the central or middle transverse extending line **13b** of the character matrix is continuously visible and is employed for the portrayal or display of each of the ten numerical characters or numbers. FIG. **7** illustrates such numerical characters 0 . . . 9. For adjustment or setting purposes each tongue **15a** . . . **15f** possesses a radially protruding cam or dog **16** which can engage with suitable recesses **26** provided at the inner wall of the ring-shaped adjustment component **20**. The recesses **26** are arranged in such a fashion that for each adjustment or setting **0'** . . . **9'** of the adjustment component **20** the cams **16** only engage for those tongues **15** which form the lines at the character matrix required for the portrayal or representation of the relevant numerical character. Accordingly, for the setting or adjustment position **0'** the cams of the tongues **15a**, **15e** and **15c** which form the matrix lines **14a**, **13a** and **14c** must engage in recesses, whereas the cams of the remaining tongues must not be situated opposite any recesses, so that the slot-shaped openings of the matrix lines **14b**, **13c** and **14d** are closed. In the illustrated adjustment position or setting **6'** only the cam **16** of the tongue **15d** forming the matrix line **14d** is not situated opposite any recess **26**, so that the slot-shaped opening is closed and the matrix longitudinal extending line **14d** is practically invisible and therefore there can be indicated the numerical value **6**. If the tongues **15a** . . . **15f** are, for instance, of a width greater than six cam diameters, then the cams and the recesses can be arranged in a track, wherein the cams of the successive tongues are always offset by at least one cam diameter. In the case of a smaller tongue width the cams and associated recesses must be arranged in two or three tracks. This will be considered in greater detail hereinafter during the disclosure of this development.

With so-called code or coding switches there are indicated in ten settings or adjusted positions the individual numerical characters and in each adjusted position or setting switches are closed and opened, so that by means of the switch positions there can be reproduced the code messages or words of the set numerical characters. In the case of visual indicator or display apparatuses of the previously described type it is possible to construct code switches of small dimensional size which particularly manifest themselves by their large and clearly discernible numerical characters. There will now be described hereinafter a number of exemplary embodiments.

A simple embodiment of slide-code switch of flat construction has been illustrated by way of example in FIGS. **8** and **9**. The base body **10** consists of a rectangular plastic plate, the left half of which is thicker than the

right half thereof and possesses a planar, for instance, black visual surface **11** with, for instance, a yellow seven-line character matrix **12** of a construction of the type depicted in FIG. **1.** The code or coding switch should serve for encoding the numerical characters or numbers according to a binary-coded-decimal notation. At the right half of the plastic plate there are arranged for each binary place or position of the binary-coded-decimal notation two contact pieces or elements **17***a*, **18***a* . . . **17***d*, **18***d*. The contact pieces **17***a* . . . **17***d* are stationary contacts which are mounted in a row next to one another at the base body **10** at the region of its upper edge and possess connection pins **30***a* . . . **30***d* protruding from the base body **10.** The other contact pieces or elements **18***a* . . . **18***d* are contact springs or blades which are connected at their lower ends with one another and possess a common onnection **31.** At the four corners of the plastic plate there are mounted blocking or engagement balls or spheres **32.**

As will be best understood by referring to FIG. **9** the adjustment component **20** consists of a plate formed of transparent plastic which bears upon the visual surface **11** of the base body **10** and is guided at both end or side surfaces **19** of the base body **10.** In order to ensure that the adjustment component **20** during displacement engages with the ten settings or adjusted positions **0'** . . . **9'** there are provided at the underside two rows of locking or engagement recesses **33** into which fit the locking spheres or balls **32** of the base body **10.** The window **22** of the adjustment component **20** which bears upon the visual surface **11** carries at the cover surface a cover line pattern **23** of black transverse extending cover lines **13** and longitudinal extending lines **14,** as such have been shown in FIG. **2.** At the right next to the window **22** there are arranged at the adjustment component **20** switching means for the pairs of contact pieces **17***a*, **18***a* . . . **17***d*, **18***d* of the base body **10.** Since contact springs are provided for the switching pieces or elements the stationary contacts can be depressed. The switching mean-cams **34** are arranged in accordance with the provided binary-coded-decimal notation at the points of intersection of four columns A, B, C, D and ten lines corresponding to the settings or adjustment **0'** . . . **9'**, wherein the columns A, B, C, D are aligned at the pairs of contact pieces of the base body **10.**

FIG. **9** illustrates the arrangement of the switching mean-cams **34** (full line circles) for a purely binary or dual coding of the decimal numbers wherein for the code switch the binary value 1 is portrayed by a closed contact and the binary value 0 by an open contact. At the adjustment component **20** there can be provided instead of the cams also recesses into which noses of the contact springs engage. For code switches with a different binary-coded-decimal notation, for instance an Aiken or Stibitz code there are employed adjustment components of the same design, wherein only the cams or recesses are appropriately differently arranged for the actuation of the contact springs. In order to be able to clearly discern the numerical characters through the window **22** of the adjustment component **20** it is recommended to introduce a drop of oil between the visual surface **11** and the cover surface of the window **22.** The relatively large width of such flat coding switches is generally undesirable. The width of a sliding code switch can be reduced at the expense of the low constructional height.

FIG. **10** illustrates the individual components of a parallelepiped or quadratic-shaped sliding code switch. With this construction of code or coding switch the base body or base body member **10** consists of a plastic block, the one jacket or outer surface of which is designed as a visual surface **11'** bearing the seven-line character matrix **12.** Recesses **35** for receiving a substantially U-shaped resilient or spring element **36** are provided at both sides of the base body **10** which bound the visual surface **11.** Each leg **36***a* of the resilient element or component **36** possesses three resilient projections or fingers **36***b*, wherein in each case two such projections **36***b* form two contact pieces or elements **18***a*, **18***b*, **18***c*, **18***d* and one projection serves as a locking or clamping spring **38.** At each resilient projection **36***b* there is formed at the region of the free end thereof an outwardly directed or flexed nose member **37,** and additionally there is provided a common connection or connection means **31.** The resilient or spring element **36** is merely pushed onto the base body **10,** whereby the resilient projections **36***b* laterally protrude and their noses **37** extend somewhat past the side planes of base body **10.** Both of the lower located spring projections forming the contact pieces **18***a* and **18***d* are shorter, as shown, than the remaining resilient projections. The contact pieces or elements **17***a*, **17***b*, **17***c*, **17***d* (contact elements **17***c*, **17***b* not being visible in FIG. **10** but are located opposite contact elements **17***a*, **17***b*) are designed as contact pins, each two of which are arranged at one of the respective lateral recesses **35** of the base body **10.** The adjustment or setting component **20** is formed from transparent plastic and is designed as a parallelepiped-shaped hood which can be placed upon base body **10,** whereby the wall opposite the hood opening bears upon the visual surface **11'** of the base body **10** and forms the window **22.** The window underside constitutes the cover surface and carries the cover line pattern which has not been particularly shown in FIG. **10.**

Continuing, it is here mentioned that at the inside there are formed at the side walls 3both a, **20***b* of the adjustment component **20** locking or engagement recesses **33** for the noses of the locking or engaging springs **38** and so-called "code"— recesses **25** for the noses of the switching element-contact springs **18***a* . . . **18***d*, which are arranged in the manner of FIG. **9** at the points of intersection of the columns A, B, C, D and lines **0'** . . . **9'**. Assembly of this code or coding switch is very simple, it is only necessary to initially mount the resilient or spring element **36** at the base body **10** and then to mount the hood-shaped adjustment or setting component **20.** For exchanging the adjustment component **20** there are not required any tools. During displacement of the adjustment component the engaged or locked positions are positively assumed, since for each setting or adjusted position **0'** . . . **9'** there engages in addition to both locking springs **38** at least one contact spring.

Now in the case of the sliding-code switch arrangement depicted in cross-section in FIG. **11** the base body **10** thereof essentially has the same configuration as the base body of the embodiment of FIG. **10,** however is designed as a closed hollow body. This base body **10** which is open during fabrication at its head end for instance is closed by a cover **39.** The lines or markings **13***a*, **13***b*, **13***c* and **14***a* . . . **14***d* of the character matrix are line-shaped slots at the wall **10***a* of the base body

which supports the visual surface **11.** The base or background of the visual surface **11,** in this case, is maintained in a bright color at which there can be particularly well discerned the deep black appearing lines of the character matrix. The cover line pattern at the cover surface **21** of the adjustment or setting component **20** is maintained at the same color tone or color as the background or base of the visual surface **11.** A cylindrical lens **29** is arranged at the window of this adjustment component. By means of the cylindrical lens **29** there is ensured for good visibility, especially of the narrow longitudinal length-wise extending lines of the character matrix. It is advantageous if the cylindrical lens **29** and the adjustment or setting component **20** are formed from transparent plastic as an integral or one-piece component. With such design of the base body **10** there is additionally realized the possibility of internally illuminating the character matrix consisting of slot-shaped openings at the visual surface in that a light source **40,** for instance a glow lamp, is mounted at the cover **39.**

In order to obtain close spacing of the successive adjustments or settings **0'** . . . **9'**, it was previously necessary to employ an inclined oriented character matrix, wherein the line width also was additionally dependent upon the spacing of the adjustments or settings. In FIGS. **12** to **15** there is illustrated by way of example a sliding or slide-visual indicator or display apparatus in combination with a coding switch for instance, wherein there is employed a character matrix with longitudinal lines disposed in the displacement direction, that is to say a linear character matrix and the line width can be chosen independent of the adjustment or setting spacing. The base body **10** is for instance, in the form of a parallelepiped-shaped plastic block, the one jacket or outer surface of which constitutes the visual surface of the front surface **11'**. At each longitudinal side of the base body **10** there are provided two resilient tongues **15***a*, **15***b*, and **15***c*, **15***d* respectively, the end surfaces of which constitute parts of the front visual surface **11'** and by means of which there are formed slot-shaped openings at the front surface for the longitudinal extending lines **14***a* . . . **14***d* of the character matrix **12.** The transverse extending lines **13***a*, **13***b*, **13***c*, of the character matrix **12** can be color lines applied to the front surface or slot-shaped openings at the front surface. The tongues can be mounted at the base body **10,** however they are advantageously, as best illustrated in FIGS. **12** and **14,** formed as one piece with such base body **10,** in that there are provided cuts or cut-out portions **27** at the plastic block which extend from the front surface towards the inside having walls substantially parallel to the side surfaces of the base body **10** and lateral separation or parting cuts **28,** as best seen by referring to FIG. **12.** At the outside surface of each tongue there is located an adjustment cam **16** which is preferably formed of a steel ball embedded or inserted at the associated tongue. A recess **24** at the underside of the base body **10** contains contact pieces or elements.

Just as was the case for the embodiment depicted in FIGS. **10** and **11** the adjustment or setting component **20** in this case is also a parallelepiped-hood formed of transparent plastic which its upon the base body **10** and at the window **22** of which there is mounted a cylindrical lens **29.** The side walls **20***a*, **20***b* of the adjustment component or element **20** exhibit at the inside shaped or formed recesses **26** for the tongue cams **16.** The base body **10** and the adjustment component **20** are displaceable relative to one another through ten successive settings or adjusted positions **0'** . . . **0'**, wherein in each adjusted position or adjustment there can be set tongues **15***a*, **15***b*, etc. of the base body **10** in order to form the numbers associated therewith from the character matrix **12.** For covering the transverse lines **13***a*, **13***b*, **13***c* of the character matrix there is mounted at the cover surface **21** a cover line pattern which, for this embodiment of visual indicator or display apparatus, however, only consists of transverse extending cover lines **13.** With a cover line pattern of only five transverse extending cover lines **13** there are obtained the numerical characters or numbers of the form depicted in FIG. **3.** In the case of small dimensional constructions with a front surface of, for instance, 8 mm. by 15 mm. and because of the slight width of the tongues the cams **16** are arranged at different heights. In the illustrated exemplary embodiment the cams **16** of the tongues **15***a* and **15***c* are located at the same height and closer to the front surface than the cams of the tongues **15***b* and **15***d*. A longitudinal extending line of the character matrix is visible at the front visual surface **11'** when the cam of the associated tongue **15** engages in a corresponding recess **26** of the adjustment component **20.**

Since each of the ten numerical characters or numbers (FIG. **3**) contain at least two longitudinal extending lines of the character matrix **12** at least two tongue cams engage during each of the settings or adjustments **0'** . . . **9'**, so that the individual adjustment or settings are exactly determined and there are not required therefor any further locking or engaging elements. For coding the numerical characters according to a binary-coded-decimal notation there are secured to the floor of the recess **24** at the base body **10** five contact strips or fingers **41** which are electrically insulated from one another, wherein four of them are associated with the binary positions of the code and one serves as the common connection for the electrically interconnected contact elements **18***a*, **18***b*, **18***c*, **18***d*. The contact elements or pieces **18***a* . . . **18***d* are contact springs or blades of a comb-shaped spring or resilient component **42** mounted at the one end wall **20***c* of the adjustment component **20** (FIG. **15**) and possess an additional contact spring or blade **18***e*. These five contact springs **18***a* . . . **18***e* bear upon the five contact strips **41** of the base body and during displacement of the base body and adjustment components scan the contact strips. The contact strip serving as the common connection is bare at its top surface whereas the other contact strips possess at their top surface appropriate electrically insulated locations **43** corresponding to the individual settings **0'** . . . **9'** of the binary code. By means of such electrically insulated locations **43** there can be interrupted contact with the contact springs. The contact strips **41** are, for instance, connected to pins **45** of a socket **44** mounted at the base body **10.**

FIGS. **16** and **17** relate to cylindrical rotary code switches having digital visual display or indication of the numerical characters or numbers. The base body **10** consists of plastic and is in the form of a cylinder with a planar or flat front surface. By means of two parallel cuts or cut portions **46***a* and three cuts or cut portions **46***b* perpendicular to such at the front surface there are formed at the base body **10** resilient tongues

15*a* . . . 15*f* for the four longitudinal lines 14*a* . . . 14*d* and both of the outer transverse lines 13*a* and 13*c* of the character matrix as well as four corner tongues 47. The base body 10 can be solid or hollow. In the case of a solid base body there is present at the center of the front surface 11′ the seven-line character matrix and the tongues are covered by a visual surface 11, so that there is only visible the rectangular central portion of the front surface with the character matrix. In the case of a hollow base body and after carrying-out the cutting operation the central rectangular portion drops out of the front wall and the character matrix must be formed at a visual surface 11. A most simple possibility is to secure a window 49 to the four corner tongues 47, at the underside of which there can be produced by means of a color coating or covering a visual surface 11 with the transparent character matrix. In the case of small constructional embodiments there can be advantageously employed as the window 49 a planoconvex lens. The adjustment component or setting 20 has the shape of a cylindrical sleeve and is rotatably placed upon the base body 10. This adjustment component 20 also preferably consists of plastic. The resilient tongues 15*a* . . . 15*f* for the character matrix possess cams 16 for setting or adjustment purposes, preferably formed by embedded steel balls, and at the inner wall of the adjustment component 20 there are present appropriate recesses 26 into which can engage these cams 16 of the tongues 15*a* . . . 15*f*.

FIG. 17 illustrates the mode of application of the contact pieces or elements for a code or coding switch with binary-coded-decimal notation. At the inner wall of the hollow base body 10 or a cylindrical recess of the solid base body there are arranged five contact springs or blades 50*a* . . . 50*e* of stepped or differing length. The upper ends of these contact springs are flexed into noses 51 which are located at openings or passageways 48 of the wall of the base body 10 and at the outside protrude therepast. The inner wall of the adjustment or setting component 20 carries a five-track code contact strip 52 with the four dual or binary locations or positions of tracks 52*a* . . . 52*d* associated with a code and a null track 52*e* (FIG. 18) which can be scanned by the contact springs 50*a* . . . 50*e* during rotation of the adjustment component 20. The code contact strip 52 can be fabricated from an adhesively bonded sheet metal strip with recesses corresponding to the code or as a metallic covering at the adjustment component. With a hollow base body 10 (FIG. 17) there can be provided a light source 40 for illuminating the character matrix from the inside or, in order to permit the character matrix to appear in a deep-black color, there can be provided a closure cover.

Now for the ten characters or numbers 0 . . . 9 there are necessary ten settings or adjustment 0′ . . . 9′. FIG. 18 illustrated a development of the inner wall of the adjustment component 20 with the recesses 26 arranged in two rows for the tongue cams 16 and the code contact strips 52. Additionally shown in FIG. 18 are the resilient tongues 15*a* . . . 15*f* with their cams 16 and the contact springs 50*a* . . . 50*e*, and specifically in the adjusted position or setting 0′. The thick graduation or partial lines designated by 0′ . . . 9′ represent the position of the settings or adjustments, the spacing of two graduation lines amounts to 36°. By means of thin auxiliary graduation lines having a spacing of 9° the regions between successive settings are each divided into four equal parts. The cams 16 of the tongues 15*a* . . . 15*f* are located in two planes; the cams of the tongues 15*a*, 15*c*, 15*f*, for instance, in an upper plane and the cams of the tongues 15*b*, 15*d*, 15*e* in a lower plane (FIG. 18). In the illustration of FIG. 18 each tongue extends over 36°. The cams of each plane are offset by 9° with regard to one another. In the case of the tongues 15*a*, 15*e* the cams are located at the center, for the tongues 15*f*, 15*b* the cams are located 9° to the left of the center, and for the tongues 15*c*, 15*d* 9° to the right of center. The recesses 26 of the adjustment component 20 are located at the same planes as the cams and are arranged in the manner depicted in FIG. 18.

In the setting 0′ the cams of the tongues 15*a*, 15*c*, 15*e* engage with recesses and accordingly together with the already visible central transverse line 13*b* of the character matrix there is indicated a null (FIG. 7). During setting to position 1′ the recesses are displaced by one setting or adjustment towards the right and it is apparent that then only the cams of the tongues 15*c* engage and therefore there is indicated the character 1. In the setting 0′ only the contact spring 50*e* bears against metal of the code contact strip 52, whereas the contact springs 50*a* . . . 50*d* bear upon the insulated wall of the adjustment component, so that none of the code switches is closed, corresponding to the coded message or information 0,0,0,0 for a null. During adjustment or setting to position 1′ the contact springs 50*d* and 50*e* bear against metal. At the code track D there is then closed the switch, whereas the switch for the code tracks A, B, C are open and there is obtained as the coded message 0,0,0,1 representing the 1.

During each setting 0′ . . . 9′ there is thus indicated the therewith associated numerical character or number and at the same time the coded message for this numerical character is obtained. Such cylindrical rotary visual indicator or display apparatuses or rotary coding switches can possess small diameter, for instance 10 mm., but they do possess a rather great height.

On the other hand, a flat rotary code switch with digital visual indication is depicted in FIGS. 19 and 20. With the visual indicator or display apparatus of FIGS. 19 and 20 the base body 10 consists of a circular plastic disk or plate from which there are cut-out the four corners, as best seen by referring to FIG. 19. The six resilient tongues 15*a* . . . 15*f* are obtained by cylindrical bores 53 parallel to the front surface of the base body, which are cut by a very thin cut-out or cut portion 54 at the front surface and by means of the lateral separation or parting cuts 55. Now as best seen in FIG. 20 if a tongue is flexed downwards, then the thin cut or cut-out portion 54 splits open or spreads apart and it is possible to look into the lower situated bore 53. Open cuts 54 thus provide the lines of the character matrix. The base body 10 can consist of, for instance, black plastic and the front surface can carry a white color covering, so that with flexed tongues the character matrix appears black upon a white background or base. The central line 13*b* of the character matrix can be a colored line.

In FIG. 19 the central transverse extending line 13*b* of the character matrix is located off center and the tongues 15*b*, 15*d* are narrower than the tongues 15*a*, 15*c*. The cams 16 for adjustment or setting of the tongues are located at the side of the floor or bottom of the base body and are arranged at two tracks. The adjustment component 20 possesses a planar or flat

contact or traveling surface **56** upon which bears the base body **10.** Recesses **26** are formed along two tracks at the contact or sliding surface **56** and into which can engage the cams **16** of the resilient tongues **15***a* . . . **15***f*. The recesses **26** can be arranged, for instance, in the manner depicted in FIG. **18.**

With the rotary code switch depicted in sectional view in FIG. **20** a shaft or axle **59** is secured to a socket plate **57,** and upon this shaft **59** there is rotatably mounted the adjustment component or part **20.** The other end of the shaft **59** carries the base body **10.** A disk or plate **60** formed of transparent plastic is secured to the front surface of the base body **10.** At the face or side of the disk **60** confronting the front surface, and which face provides the visual surface **11,** there is applied for instance a colored covering or coating, so that the locations disposed above the cut-outs **54** are left free so that the character matrix is clearly visible. In the case of larger dimensional size embodiments there can be provided between the tongues and the disk **60** helical or coil springs **61** for instance, which serve to press the tongues against the contact surface **56** of the adjustment component **20.** In the case of smaller size constructions the elasticity of the plastic is usually sufficient. The adjustment or setting component **20** forms a housing which is closed at the top by a lens **49,** by means of which there is visible on a magnified scale the visual surface **11** of the disk **60.** A code contact disk **63** is arranged in a circular ring-shaped recess **62** of the adjustment component **20,** the code tracks of which are scanned by contact springs **64.** The contact springs **64** are secured for instance to contact pins **58** of the socket plate **57.** The central transverse extending line **13***b* of the character matrix is continuously visible in this embodiment, so that there are obtained the numerical characters of FIG. **7.** In order to obtain numerical characters or numbers like those of FIG. **3** it would be necessary to cover the central transverse extending line **13***b* of the character matrix at the settings **0'** and **1'**. In order to achieve this result, it would be possible to design a front surface of the base body **10** as a visual surface and to employ the flat side of the lens **49** as a cover surface at which there can be mounted, in the manner shown in FIG. **19** by phantom lines, two cover lines **13** for the transverse extending line **13***b* of the character matrix.

Instead of indicating or displaying numbers it would be possible to portray with the same character matrix also large letters in a stylized form, wherein there is only necessary a different arrangement of the cover lines at the cover surface and the recesses for the tongue cams. With a lesser number of settings or adjustments it would be possible to only provide part of the seven-line character matrix for the indicator.

While there is shown and described present preferred embodiments of the invention, it is to be distinctly understood that the invention is not limited thereto but may be otherwise variously embodied and practiced within the scope of the following claims.

Accordingly, what is claimed is:

1. An apparatus for the visual display of characters, especially decimal numerical characters, comprising a base body having a front visual surface, said front surface being equipped with a line-character matrix for the portrayal of the characters, said line-character matrix being in a configuration substantially corresponding to the numeral eight and composed of three parallel transverse extending lines and two pairs of longitudinally extending lines, and an adjustment component successively adjustable through different settings operatively associated with the line-character matrix of the base body for selectively rendering visible predetermined lines of the line-character matrix in each setting of the adjustment component corresponding to an associated character, said adjustment component and said base body being selectively adjustable into different successive positions due to relative to-and-fro movement of said adjustment component and base body, said adjustment component being provided with a window which in each adjusted position covers the front visual surface of the base body, said window having a cover line pattern formed of transverse lines for covering the transverse lines of the character matrix as well as means for rendering non-visible selective lines of the longitudinally extending lines of the character matrix such that in each position there is only clearly visibly discernible the lines of the character matrix which portray the character associated with such given setting.

2. The apparatus as defined in claim **1,** wherein said visual front surface of the base body comprises a seven line-character matrix.

3. The apparatus as defined in claim **2,** wherein said adjustment component and said base body during successive settings are displaceable transverse to the transversely extending lines of the character matrix, said adjustment component having a cover surface sliding over the visual front surface of the base body.

4. The apparatus as defined in claim **3,** wherein the character matrix at the visual front surface of the base body is arranged with its longitudinally extending lines disposed at an inclination with respect to the displacement direction of the adjustment component, the non-visible rendering means for the longitudinally extending lines of the character matrix which are to be covered comprising longitudinally extending cover lines arranged at the cover surface in successive settings.

5. The apparatus as defined in claim **3,** wherein the cover surface for said adjustment component is non-transparent and possesses the cover line pattern including said transversely extending cover lines, said visual surface of said base body sliding over the cover surface of the adjustment component, and having a background of the same color as the cover lines of the cover surface forming the lines of the character matrix through slot-shaped openings in said cover surface.

6. The apparatus as defined in claim **4,** wherein the base body possesses as the visual surface a front surface with non-transparent background, said window of said adjustment component sliding upon said front surface, the side of the window confronting the front surface carrying in the form of said cover surface a pattern of said cover lines formed of non-transparent cover lines.

7. The apparatus as defined in claim **6,** wherein the base body comprises a hollow body and the lines of the character matrix comprise slot-shaped openings at the wall of the hollow body which carries said front surface.

8. The apparatus as defined in claim **6,** wherein the window of the adjustment component is constructed as a cylindrical lens.

9. The apparatus as defined in claim **1,** especially for coding decimal numerical characters according to a bi-

nary code, the binary numbers being portrayed by open and closed switches, locking elements for positively determining the successive settings of the base body and the adjustment component, two closable contact elements provided for each binary position of the code, said contact elements during adjustment to one setting of the coded message are opened and closed in accordance with the numerical character associated with the setting.

10. The apparatus as defined in claim **9,** wherein each pair of closable contact elements comprises a stationary contact and a contact spring.

11. The apparatus as defined in claim **10,** wherein the stationary contacts are arranged electrically insulated from one another at the base body and the contact springs are defined by tongue-shaped projections of a resilient element arranged at the base body, actuation means provided at the adjustment component in the individual settings for actuating the tongue-shaped projections.

12. The apparatus as defined in claim **9,** further including a code contact strip arranged at the base body, a resilient component with contact springs forming projections for scanning the code contact strip arranged at the adjustment component.

13. The apparatus as defined in claim **12,** wherein a socket is secured to the base body, said contact strip having individual code tracks, said socket having contact pins electrically connected with the individual code tracks of the code contact strip.

14. The apparatus as defined in claim **9,** further including a code contact strip provided at the adjustment component, electrically insulated contact springs provided at the base body for scanning the code contact strip in the successive settings.

15. The apparatus as defined in claim **14,** wherein said contact elements include contact springs, a socket secured to the base body, said socket having contact pins electrically connected with the contact springs.

16. The apparatus as defined in claim **4,** wherein the longitudinally extending lines of the character matrix are inclined at an angle in a range of 15° to 20° with regard to the displacement direction of the adjustment component.

* * * * *