A. H. FOWLER.
Steam-Boiler

No. 212,918 Patented Mar. 4, 1879.

Fig. 1.

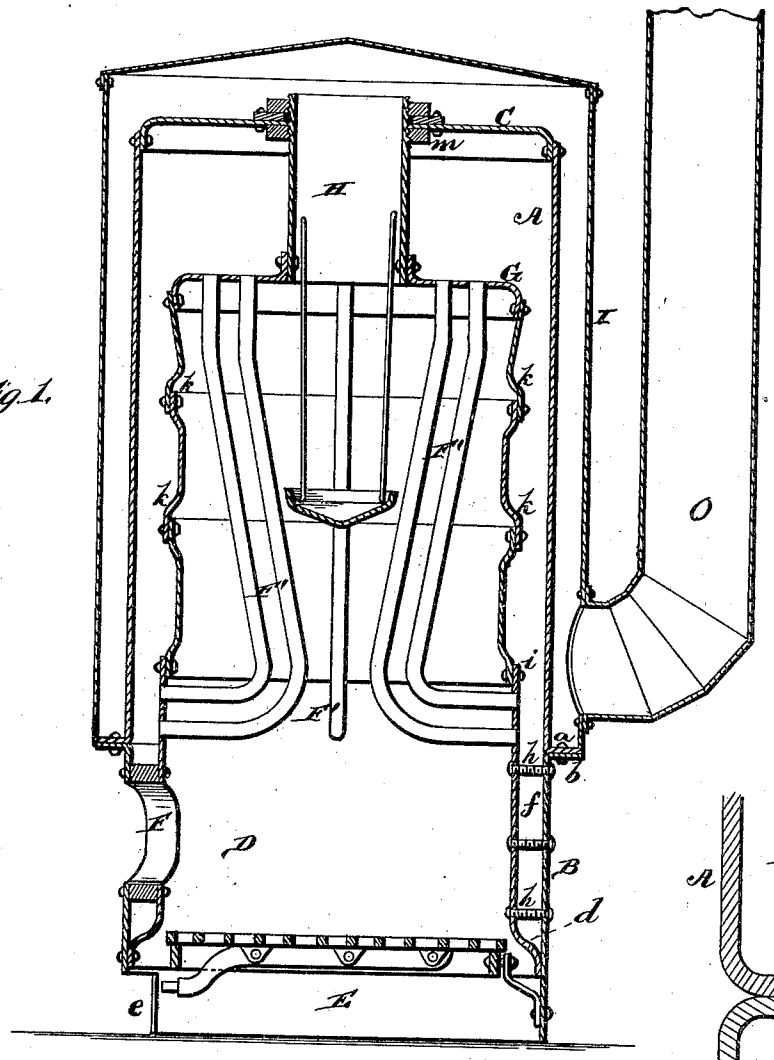

Fig. 2.

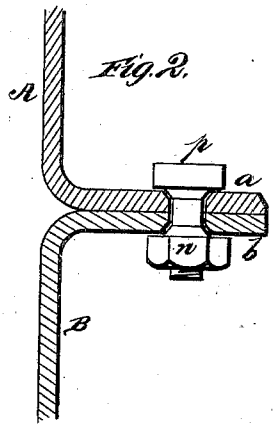

WITNESSES
Robert Everett
Jas. J. Sheehy.

INVENTOR.
Arthur H. Fowler.
By Gilmore, Smith & Co.
ATTORNEYS.

N. PETERS, PHOTO-LITHOGRAPHER, WASHINGTON, D. C.

UNITED STATES PATENT OFFICE.

ARTHUR H. FOWLER, OF NEWARK, OHIO.

IMPROVEMENT IN STEAM-BOILERS.

Specification forming part of Letters Patent No. **212,918**, dated March 4, 1879; application filed July 20, 1878.

To all whom it may concern:

Be it known that I, A. H. FOWLER, of Newark, in the county of Licking and State of Ohio, have invented a new and valuable Improvement in Steam-Boilers; and I do hereby declare that the following is a full, clear, and exact description of the construction and operation of the same, reference being had to the annexed drawings, making a part of this specification, and to the letters and figures of reference marked thereon.

Figure 1 of the drawings is a representation of a vertical central section of my steam-boiler. Fig. 2 is a sectional detail of the same.

The nature of my invention consists in the construction and arrangement of a sectional tubular boiler, as will be hereinafter more fully set forth.

The annexed drawings, to which reference is made, fully illustrate my invention.

The outer shell or cylinder of my boiler is made in two parts, A and B. The upper part, A, has riveted to its upper end a wrought-iron head, C, while the lower end has a circumferential outwardly-projecting flange, *a*, made either by machinery or by hand, to meet a corresponding flange, *b*, on the lower part, B, of said outer shell, as shown. The lower end of the part B extends below the grates to form the ash-pit E, and has an opening, *e*, cut out at its lower end for draft below the grates and for removing ashes. The two parts of the outer shell will be either riveted or welded in the seam vertically.

The furnace consists of a straight cylinder, D, of wrought iron or steel, flanged out, as shown at *d*, at its lower end to meet the outer shell, B, and is riveted to the same in the same manner as a boiler is ordinarily riveted. This flanging out to the outer shell should, in all cases, be sufficient to form an annular water-space, *f*, all around the fire-box of suitable dimensions. There is also an opening made for a fire-door by inserting between the furnace and outer shell a wrought-iron ring or band, F, of the proper form, riveted and calked in the usual manner. I also provide stay-bolts *h*, screwed in and reaching through the water-space and tying the furnace to the lower part, B, of the outer shell to resist any liability of collapse in the furnace, as said furnace will have external pressure. These screwed stay-bolts extend at necessary intervals from the bottom of the furnace to a point in the vertical length where the flanges *a b* of the outer shell-sections, A B, occur. Immediately above the parting flanges *a b* there is a straight portion, *i*, of the furnace D, to receive the lower ends of the water-tubes F′ F′.

The upper end of the furnace has a wrought iron or steel head, G, riveted to it in the usual manner through its flange, as shown. The intervening space of the furnace between the top head, G, and the point where the lower ends of the water-tubes F′ enter the same is formed at regular intervals with circumferential corrugations *k k*, the object of which is to increase the resisting power of the furnace to external pressure without the aid of stay-bolts, &c., which, if used, would prevent the outer shell from being removed.

The top head, G, of the fire-box has an opening in the center, which is flanged upward, and to this flange is riveted the smoke-flue H, as shown. The remainder of the head G is drilled with holes at proper places and of proper size to receive the upper ends of the water-tubes F′. The water-level will be at a point three or more inches above the head G, allowing the entire furnace to be immersed, as also both ends of the water-tubes F′.

The smoke-flue H consists of a lap-welded flue, with one end riveted to the flange of the furnace-head, as shown. The upper end of the flue H has a screw cut thereon, with a jam-nut, *m*, below the top head, C, of the boiler. On this top head C of the boiler will be riveted a cast-iron flange, with a turned and ground surface, on which will be screwed a second jam-nut, of brass, to be screwed tightly on the smoke-flue and form a perfect joint. The advantages of this are that it allows accurate adjustment of the interior to the exterior part of the boiler by the use of two jam-nuts at this point; and in using a brass jam-nut which will not corrode, the heated gases escape through the smoke-flue and are returned on the outside of the boiler as far as the parting flanges *a b*, thus providing against contact with cold air of the outer shell of the boiler, thereby avoiding condensation and radiation of heat that would take place by con-

tact of plates of the boiler with cold air. This also adds a large amount of heating-surface to the boiler.

The gases are confined either by a sheet-iron smoke-jacket, I, as shown, or by brick-work. In this instance a sheet-iron jacket is shown, and it is provided with a smoke-flue, O, starting near its bottom. The smoke passes first through the smoke-flue H, thence down around the part A, and out through the flue O.

The water-tubes F′ are bent to a particular form, with two bends, as shown, to resist the direct thrust of the same against the ends where fastened to the sheets, caused by lengthening the tubes by expansion, and also the strain that would be caused on the ends by contraction. This expansion and contraction being thus provided for, the liability of the flues F leaking at the joints is entirely overcome.

The flanges *a b* of the outer shell, A B, of the boiler are bolted together by a peculiar bolt and nut, to obviate the use of grommets. The neck of the bolt *p* is made conical, and the side of the nut *n* conical, with a corresponding countersunk hole in the flange, by which the bolt-head and nut squeeze tightly into this countersink and form a tight joint. The outer rim of one flange is calked to the other in the ordinary manner of boiler-calking. The nuts are made of brass, thereby avoiding corrosion, and being always readily detached.

My boiler is a perfect sectional boiler, made entirely of wrought iron or steel, and yet of such a form as to be readily taken apart for repairs or cleaning out.

The furnace is such that the gases have an opportunity to expand and be consumed, and in doing so are caused to come in contact with a large area of surface to act on water; also, by consuming the gases in a large chamber a better combustion is obtained, for it is a well-known fact that when gases are compelled to enter small tubes they are extinguished, whereas in my boiler they have ample opportunity to expand and burn up. The water being cut up into small bodies, and the combustion being made approximately perfect, a more economical boiler is obtained, as the heating-surface is more efficient and the fuel is burned better.

The boiler is very simple in form, and all parts of it can be made by machinery, thereby cheapening it, so that a horse-power can be sold for less money than those now made, and still be of better material and better made. It generates steam very rapidly, and it has a positive circulation of water, caused by the tubes and large amount of fire-box surface exposed to the action of the fire, so that the whole mass of the water will be kept at an even degree of heat, making the expansion of all parts of the boiler regular and even.

What I claim as new, and desire to secure by Letters Patent, is—

1. In a steam-boiler, the smoke-flue H, attached to the top head G, and adjustably connected to the top head C by jam-nuts, as described, in combination with the shell I, having smoke-flue O near its bottom, substantially as and for the purposes set forth.

2. In a boiler, the smoke-flue H, attached to the top head G, and provided with screw-threads upon its upper end, in combination with the top head C, and adjustably connected thereto by jam-nuts, in the manner and for the purposes set forth.

In testimony that I claim the above I have hereunto subscribed my name in the presence of two witnesses.

ARTHUR H. FOWLER.

Witnesses:
WILLIAM H. FULTON,
ALLEN B. COFFMAN.